This is a reproduction of a library book that was digitized by Google as part of an ongoing effort to preserve the information in books and make it universally accessible.

Google™ books

https://books.google.com

Digitized by Google

UNIVERSITY OF
ILLINOIS LIBRARY
AT URBANA-CHAMPAIGN
OAK STREET

Digitized by Google

Digitized by Google

Digitized by Google

AF MANUAL 335-25

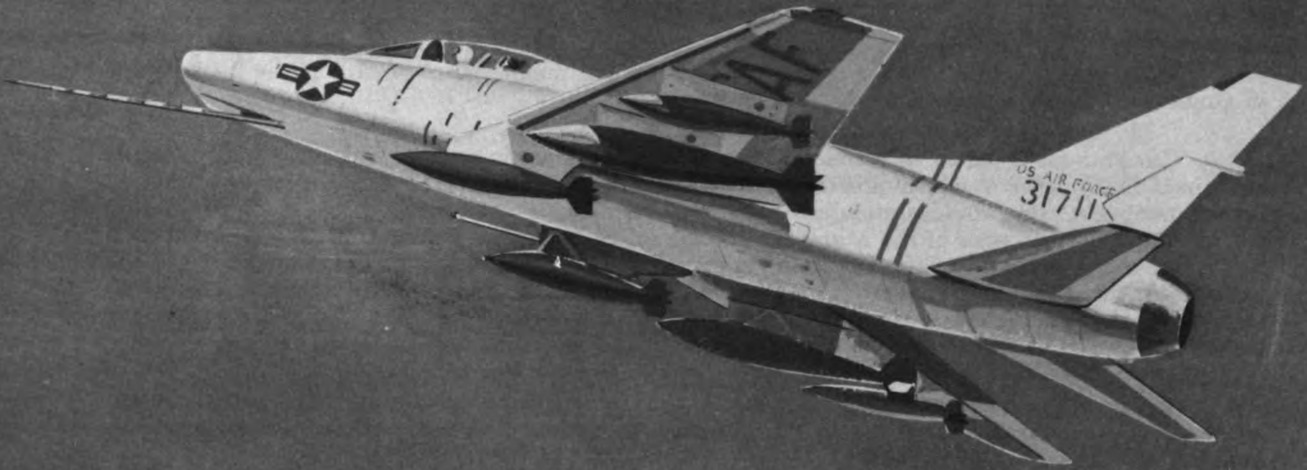

FIGHTER
Weapons

DEPARTMENT OF THE AIR FORCE

Digitized by Google

*AIR FORCE MANUAL
NUMBER 335-25

DEPARTMENT OF THE AIR FORCE
WASHINGTON 25, D. C.
MAY 1956

FOREWORD

This Manual is intended for use in the training and maintenance of skill of the fighter pilot in gunnery, rocketry and bombing.

The Manual is partly directive and partly informational in nature. The directive portion is contained in Chapter 9 which prescribes procedures for practice and qualification operation of fighter weapons, and provides standard methods of scoring, recording, and tactically evaluating the results. The remainder of the Manual is for the information and guidance of all concerned with furthering the proficiency of the fighter pilot in gunnery, rocketry and bombing. The scope of the material in this Manual ranges from a discussion of the general fire control problem to the actual mechanics of harmonization of weapons and sights. It also describes procedures for evaluating the effectiveness of fighter weapons training by means of recording and assessing devices.

Recommendations and suggestions for the improvement or revision of this Manual are encouraged and should be forwarded to the Director, Personnel Procurement and Training, Headquarters USAF, Washington 25, D. C.

BY ORDER OF THE SECRETARY OF THE AIR FORCE:

N. F. TWINING
Chief of Staff, United States Air Force

OFFICIAL:
E. E. TORO
Colonel, USAF
Air Adjutant General

DISTRIBUTION:

ZI and Overseas:	
Headquarters USAF	240
Major air commands	10
Subordinate air commands	5
Wings	2
Bases	1
Fighter Groups	5
Air Force Division, National Guard	5
**Special	
Fighter Pilots AFSC 1124A	1

*This Manual supersedes AFM 335-25, Dec 50, 335-25A, Feb 53, and 335-25B, Nov 53.

**Commanders will requisition additional copies of this Manual for the purpose of individual issue to Fighter Pilots AFSC 1124A.

This Manual contains no copyright material.

Digitized by Google

358.4
Un328air
no. 335-25

To the fighter pilot

Proper employment of fighter weapons is one of the vital functions of the United States Air Force. To insure the accomplishment of this function at maximum efficiency, the Air Force is continually improving its aircraft, its equipment, and its techniques. In the final analysis, however, everything depends on you. Your ability to use fighter aircraft and associated equipment is the key to the entire situation.

Before you can use the aircraft as an effective weapon, you must be able to solve certain problems. For most of these problems this manual presents accepted solutions based on experience gained from combat, from gunnery meets, and from extensive testing by various units. Study of this manual will, therefore, provide you with valid information pertinent to your gunnery problems and will help you attain your maximum proficiency as a fighter pilot.

Digitized by Google

contents

Digitized by Google

CHAPTER 1

fire control problems

The fighter aircraft in the role assigned to it today must be able successfully to engage both airborne and ground targets. The vulnerability of these targets is continually being reduced by such measures as higher speed, greater armor, and increased retaliatary fire power. In order for the fighter aircraft to keep ahead in this race, it has been given high speed and maneuverability, and heavy hitting power with guns, bombs and rockets. The purpose of this manual is to set forth the techniques that will combine these characteristics of the fighter aircraft for maximum effectiveness.

To cope with the newer targets, the fighter aircraft must be able to deliver its fire with extreme accuracy at hitherto impossible ranges. Inevitably this has meant the development of mechanical aids to assist the pilot — devices such as computing sights and range- and direction-sensing equipment. A critical part of the problem in getting hits is to ensure that these devices are properly oriented with the aircraft and its armament. This adjustment, called harmonization, is covered fully in this manual.

Because the types of fighter aircraft and their equipments are constantly changing, it has been considered as important in the manual to tell *why* a thing is done as to describe *how* it is done. The *why* properly begins with an explanation of the general fire control problem that the fighter aircraft must meet. The firing of a gun at pointblank range illustrates the simplest kind of fire control problem. To score hits the gunner has only to aim directly at the target and to fire.

But when fire is conducted from a fighter aircraft, many complicating factors are introduced. The fighter aircraft is in rapid motion. The target may also be moving rapidly. Equally important, the distance between the fighter aircraft and the target is usually as great as accurate fire will permit. These conditions give rise to errors in the fire, and a projectile aimed pointblank will miss the target. The problem, then, is to find the magnitudes of these errors and apply appropriate corrections during the conduct of fire. When the errors are small, the pilot can be trained to make intelligent adjustments in his aiming. When the errors are large, this function must be assumed by a properly designed computer. The several types of gunfire computers that have been developed to meet this need are described in chapter 2.

This chapter deals with the gunfire problem and the rocket fire problem.

Digitized by Google

THE GUNFIRE PROBLEM

Deflection Shooting

The armament of a fighter aircraft is characterized by being fixed to the aircraft. In effect, the aircraft itself becomes the weapon, and fire is directed by aiming the aircraft.

In firing at an airborne target from a fighter aircraft the most accurate fire can be conducted from a direct stern or a head-on approach even though the target silhouette is small. But the present-day high speeds and defensive equipment of the usual targets make this approach undersirable. Instead, deflection shooting from some type of side approach must be followed.

Lead pursuit course for aircraft. In deflection shooting, when a fighter aircraft is making a pass at a target, there are obvious advantages in flying a course from any point of which successful fire can be delivered. A course of this kind is a called a *lead pursuit course*. Such a course is shown in the illustration on the left below.

When a fighter aircraft follows a course of this nature the guns are properly aimed at every instant to score hits on the target. Note that the guns are not aimed directly at the target, but at a point in advance of the target, toward which both projectile and target travel to a collision.

Collision course for projectiles. The aircraft and its guns are aimed correctly when the projectile leaves the gun along a path toward the target called a *collision course*. A course of this nature becomes established when the straight line joining the moving projectile and the target remains parallel to itself at successive instants of time, and when the projectile is also moving in a general direction to close with the target. The elements of a typical collision course are shown in the illustration below.

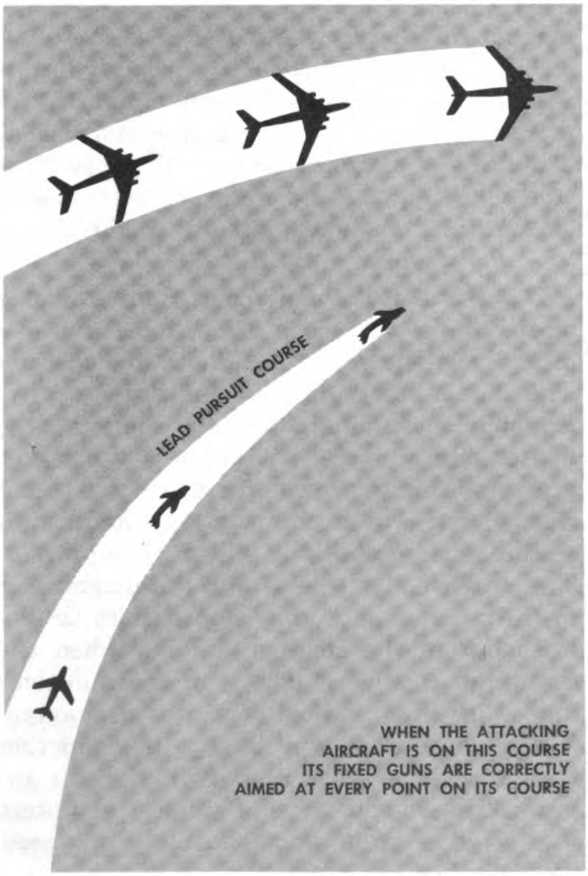

Lead Pursuit Course

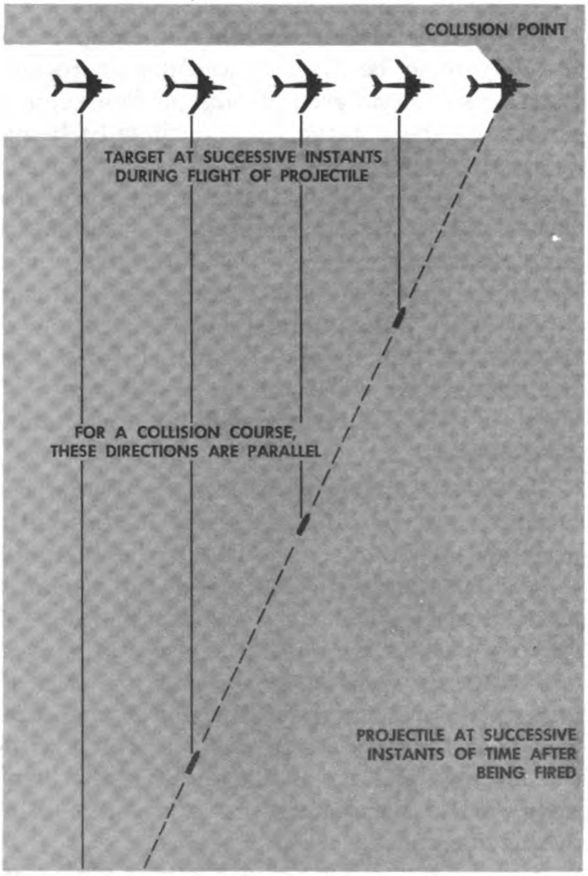

Collision Course for Projectiles

Digitized by Google

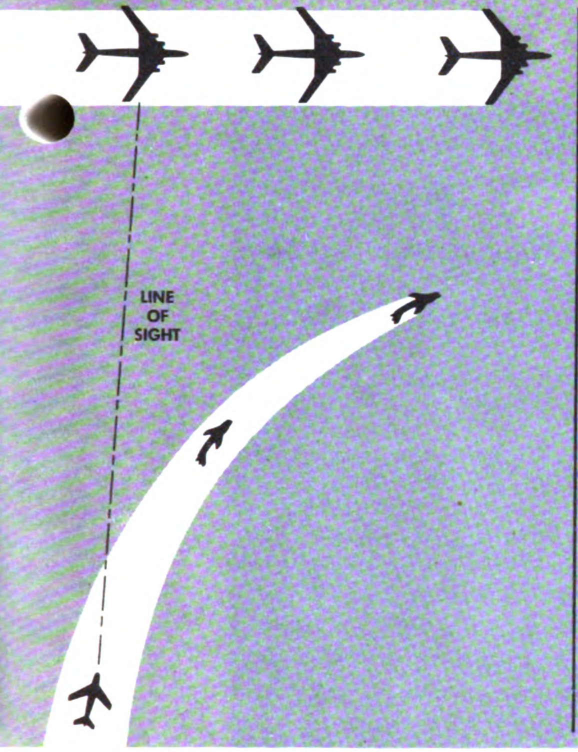

Line of Sight

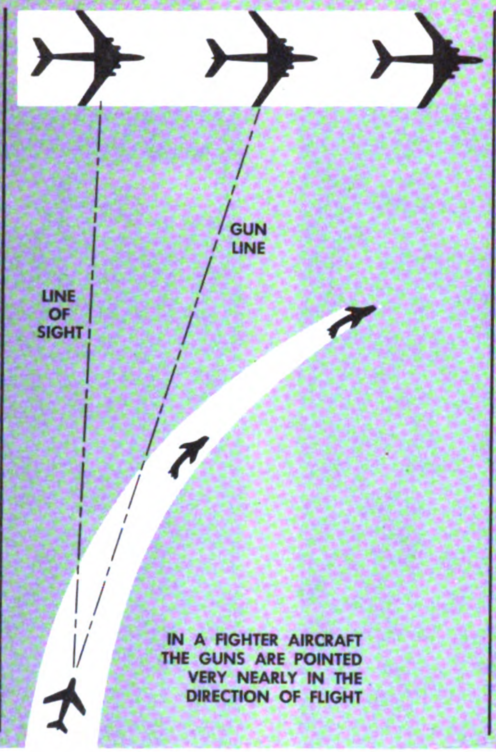

Gun Line

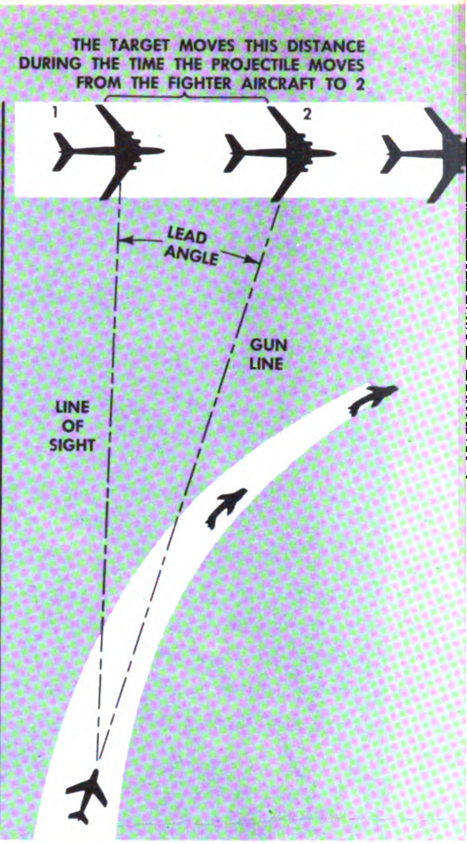

Lead Angle

Elements of the Problem

The fire control problem, as it concerns the fixed guns of fighter aircraft, is to determine the lead pursuit course that will answer the requirements of the target and attacking aircraft courses and speeds, and the type of projectile being fired. The elements of the problem are discussed in the paragraphs which follow.

LINE OF SIGHT. A typical approach in air-to-air deflection shooting is shown in the drawing on this page. A straight line is shown joining the attacking aircraft and the target. This line is called the *line of sight*. Practically, it is the direction along which the pilot of the attacking aircraft looks at any instant when he is observing the target. This is an important direction in fire control, because from the successive positions of this line much can be learned about the way in which the target is moving. Note in this figure that the line of sight is not necessarily along the direction of flight of the fighter aircraft.

GUN LINE. The next drawing shows the same situation as that in the previous one, but now an additional line, called the *gun line*, is shown. For a single gun this is the line along which the gun is pointed. For multiple guns it refers to the mean gun line. In fighter aircraft the gun line is very nearly along the line of flight of the aircraft, and it is shown this way in the figure. The gun line is an important direction because it largely determines the line of departure of the projectile.

LEAD. The next drawing the gun line is shown offset from the line of sight by the *lead angle*. Lead is required whenever the line of sight must turn to remain on the target. Only in a stern chase, or when target and attacker travel parallel courses at the same speed, is there no turning motion of the line of sight. In such cases no lead is required. In all other cases the guns must be given an angular offset, or lead, from the line of sight in order to score hits. The figure shows why this correction is required.

No matter how fast a bullet travels, it still needs a measurable time to reach the target after being fired. During this time the target travels forward, so we must "lead" the target by enough of an angle to meet it with the bullet at a future point in the target path.

Lead is not required in fire against a stationary ground target. In this case the fighter flies directly toward the target; consequently, the line of sight does not change significantly in direction.

Digitized by Google

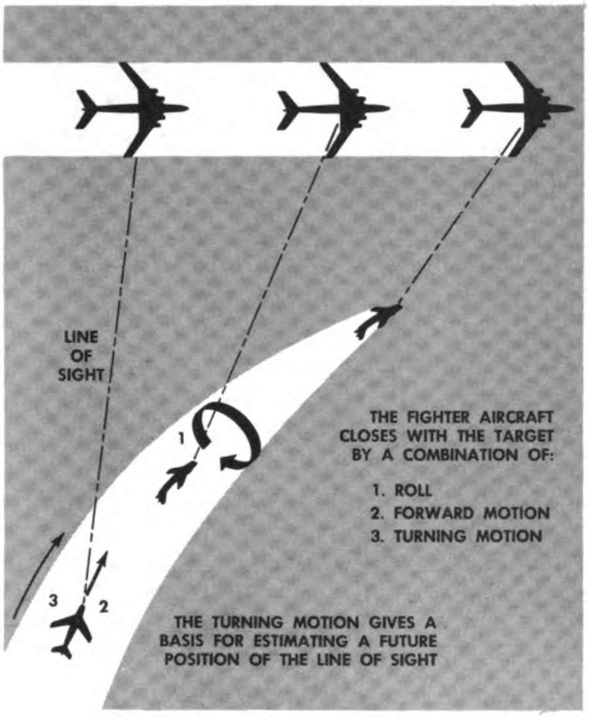

Angular Velocity of the Line of Sight

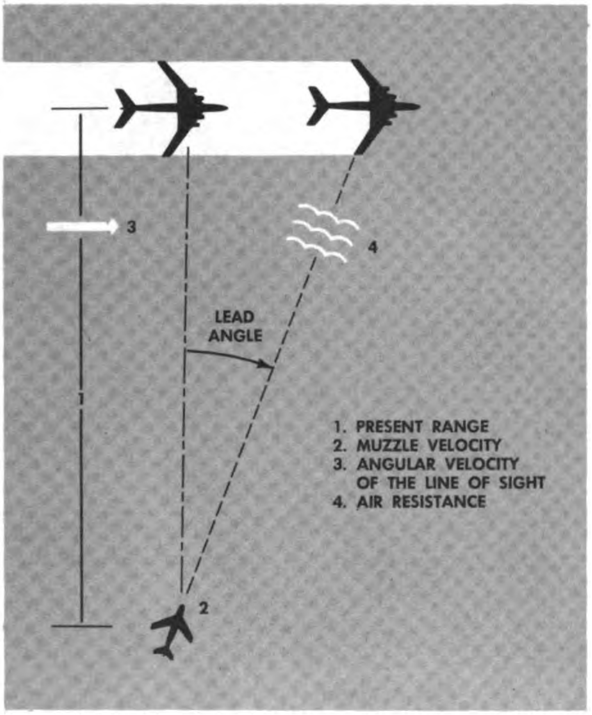

Factors That Affect the Lead Angle

ANGULAR VELOCITY OF THE LINE OF SIGHT. When the fighter closes on a target, it has three kinds of motion (1) roll about the longitudinal (or roll) axis, (2) forward motion in the direction of flight, and (3) turning motion. These are illustrated in the drawing on this page. Because of the turning motion, the pilot's line of sight to the target sweeps out an angle in space.

Lead occurs in the flat plane swept out by this line of sight. A future position of the target can be predicted a short time in advance by continuing the sweep of the line of sight into the future. Thus, to find the lead angle, the rate of sweep, or *angular velocity of the line of sight*, must be measured.

The angular velocity of the line of sight is measured by the pilot in the tracking operation. In good tracking, the pilot maneuvers his aircraft to keep a tracking index in the gunsight closely centered on the target. He thus matches the turning rate of his aircraft with the angular velocity of the line of sight. The correctness of the lead angle calculated by the sight depends on how well he achieves this match.

TIME OF FLIGHT. In order to know how far into the future to continue the sweep of the line of sight, the time of flight of the bullet to the expected target position must be known. Time of flight depends upon the range to the target and the average velocity of the projectile over this range. This can be determined closely if the muzzle velocity of the projectile, the air resistance (which slows the projectile), and the range are known. These quantities are illustrated in the drawing above.

The average velocity of the projectile is known and can be designed into the sight mechanism. But both the range and the air resistance vary so much that it is necessary either to measure them or to estimate them before the projectile is fired. Any device for measuring the range to the target must measure this distance at it exists at the instant the projectile is fired, that is, the present range. On the other hand, the projectile traverses a distance to some future target position — the collision point. Nevertheless, it has been found possible to base the lead angle successfully on measurements of the present range.

Digitized by Google

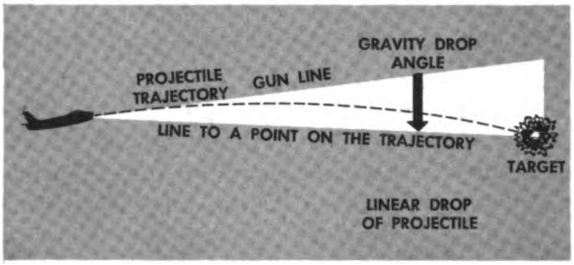

Gravity Drop Angle

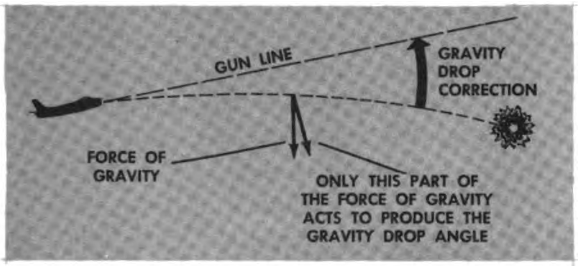

Correction for Gravity Drop

Gravity drop. Any projectile, whether it is a machine gun bullet, a bomb, or a rocket, commences to fall under the pull of gravity the instant it is released. In fire control this effect is called *gravity drop*. It occurs only in the vertical plane, and it depends only on the time of fall and the force of gravity. However, the projectile has a forward motion as well, due to the muzzle velocity. Because the projectile is moving forward at the same time it is falling, and because it falls at an ever-increasing rate, the resulting trajectory is a curved line, as illustrated above.

The amount of gravity drop is usually expressed in terms of the gravity drop angle, which is governed by the amount of the trajectory curvature. In caliber .50 machine gun fire at usual ranges this angle is small; in bombing or rocket-fire it may be very large. This curvature is determined not by the full force of gravity but by the component of gravity perpendicular to the line of departure of the projectile (practically, the gun line). It is this component that must be measured in computing the gravity drop angle. It is shown in the drawing above.

The correction for gravity drop is called the *gravity drop correction* and is made by elevating the line of departure of the projectile through the gravity drop angle. The time of fall of the projectile is identical with its time of flight and is determined as described in the paragraph on lead.

Velocity jump. When a bullet is resting in the breech of a gun in a moving fighter aircraft, the pilot senses the bullet as not moving with respect to himself. However, with respect to a possible target, the bullet is moving with the speed *and direction* of the attacking aircraft. If the gun is then fired in exactly the direction in which the aircraft is moving, the projectile will start out along the gun line with a speed that is the sum of the muzzle velocity and the aircraft velocity. But it frequently happens that the gun line forms an angle with the flight path of the aircraft. In this case, as shown in the illustration below, the projectile does not start out along the gun line. It takes, rather, an intermediate path between the gun line and the flight path. This intermediate direction depends upon the muzzle velocity, the aircraft velocity, and

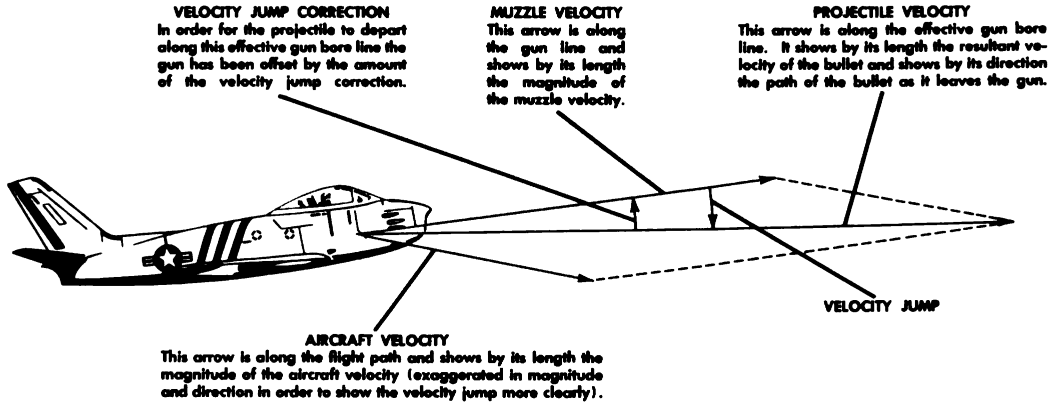

Velocity Jump

Digitized by Google

the angle between their two directions. That is, the two velocities compound to produce a resultant velocity with a new direction, called the effective gun bore line. The angle from the gun line to the line of departure of the projectile, or effective gun bore line, is called the *velocity jump*, and is classed as an error. This error is sometimes referred to as the angle of departure. Correction for this error is made by displacing the gun line by a like angular amount in the *opposite* direction. That is, the *velocity jump correction* is an angle equal and opposite to the velocity jump.

In gunfire from fighter aircraft, the velocity jump correction under normal *g* loading is usually small, perhaps 1 mil. However, in maneuvers producing heavy *g* loading, velocity jump becomes much more significant and may be a source of considerable error in aiming.

In general, the geometrical plane in which velocity jump takes place depends almost wholly on the angle of bank, as shown in the illustration below. But under typical conditions or rocket release (wings level), velocity jump occurs practically in the vertical plane.

The actual amount of velocity jump can be closely determined from the relation:

$$\begin{matrix}\text{Velocity}\\ \text{jump}\\ \text{(mils)}\end{matrix} = \begin{matrix}\text{angle}\\ \text{angle}\\ \text{between}\\ \text{the gun line}\\ \text{and the}\\ \text{flight path}\\ \text{(mils)}\end{matrix} \times \frac{\text{fighter aircraft velocity (TAS)}}{\text{fighter aircraft velocity} + \text{muzzle velocity}}$$

As an example, for a case in which the gun line and the flight path differ by 18 mils, the aircraft velocity is 800 feet per second (545 mph), and the muzzle velocity is 2,800 feet per second, the velocity jump will be 4 mils.

OTHER FACTORS. There are many other errors occurring in gunfire, bombing, and rocketfire, but which are minor in comparison with those described. For example, a small shift in the bullet trajectory, called *drift*, occurs from a combination of the gyroscopic properties of the spinning projectile with the resistance of the atmosphere. A related phenomenon called *windage jump* occurs from the action of a cross wind at the gun muzzle. (This effect becomes large in flexible gunnery). These errors are so small as to be within the tolerance limits of the fighter aircraft fire control problem and need no further comment here.

Prediction Angle

The angle from the present line of sight to the gun line when it is properly pointed to get hits is called the *prediction angle*. That is, it is the angle by which the gun line must be offset from the line of sight for the bullets to collide with the target at a *predicted* point. The illustration on this page shows that in fighter gunnery the prediction angle is compounded of lead, gravity drop correction, and velocity jump correction. It can be seen that for the instant of time illustrated on the next page the gun line is in effect offset to the right by the amount of the lead, and is then elevated by the gravity drop correction and the velocity jump correction. When the gun is fired, the bullet takes off along a path lowered from the gun line by the amount of the velocity jump. Thence forward the bullet drops because of the pull of gravity so that it falls

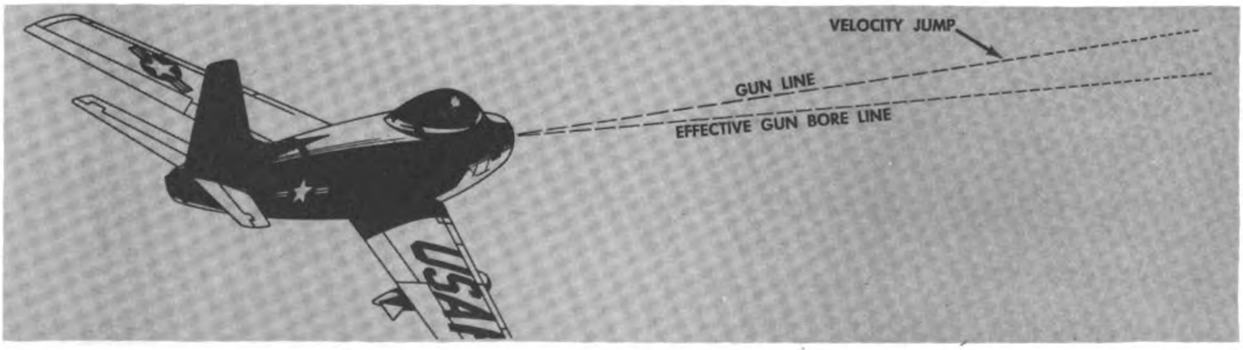

Velocity Jump in a Banked Turn

Digitized by Google

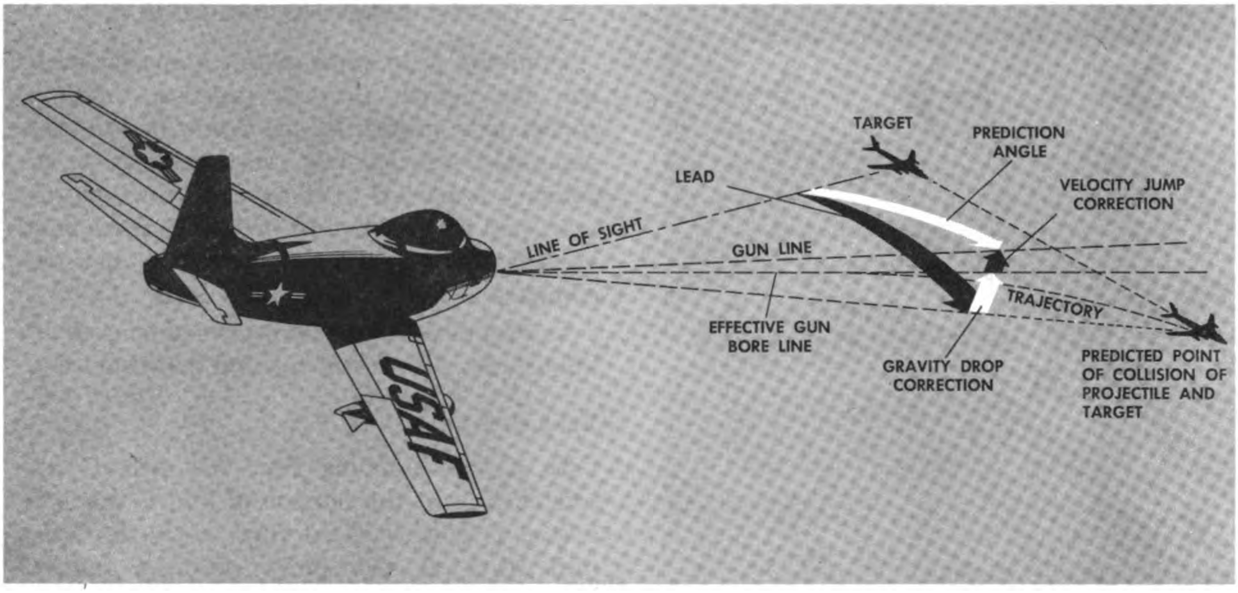

Prediction Angle and Its Components

to the path of the target and collides with it when the target reaches the predicted point of collision.

It is possible for the fighter pilot to make a skillful guess as to the magnitude and direction of the prediction angle when speeds are low and ranges are short. Even with high speeds, if the range is short enough he can use instruments for calculating lead, and rely on his judgment, plus arbitrary fixed corrections, to account for gravity drop and velocity jump. But if longer-range requirements are added to those of high speed, accurate hitting demands computing devices that will remove all pilot estimation. In chapter 2 it is shown how these increasingly severe requirements are met in computing equipment available to fighter pilots today.

THE ROCKETFIRE PROBLEM

The trajectory of a rocket launched from a fighter aircraft differs greatly from that of a bullet. With a bullet, the gun line has a determining effect on the trajectory; with a rocket, the direction of its launcher line has very little effect on the trajectory. At the instant of launch, the rocket velocity is largely that of the launching aircraft. Also, at launch, the rocket fins very quickly head the rocket into the relative wind, that is, along the flight path of the aircraft. For this reason the actual effect of the launcher line on the rocket trajectory is relatively small. Once launched, the rocket propellent quickly speeds up the rocket to a high velocity. At the same time gravity is pulling the rocket toward the earth, which acts to depress the line of rocket flight, since the rocket seeks to head into the relative wind. The result is that the rocket propellent drives the rocket earthward faster than would gravity acting alone, and a greatly increased gravity drop is experienced.

During the boost period, the rocket trajectory is not a simple curve but is rather an oscillating path as the rocket seeks the direction of the relative wind. Nevertheless, the *average* trajectory, important for fire control, is as described.

After burnout, when the propellent has become exhausted, the rocket assumes a free-fall path governed by its velocity and aerodynamic configuration.

Present fire control systems for rocketfire direct the rockets at a moving target from a lead pursuit course.

Another type of course is called the *rocket collision course*. It is shown in the illustration on the next page. In this type of course the flight path of the attacking aircraft is a straight line which, when extended from the

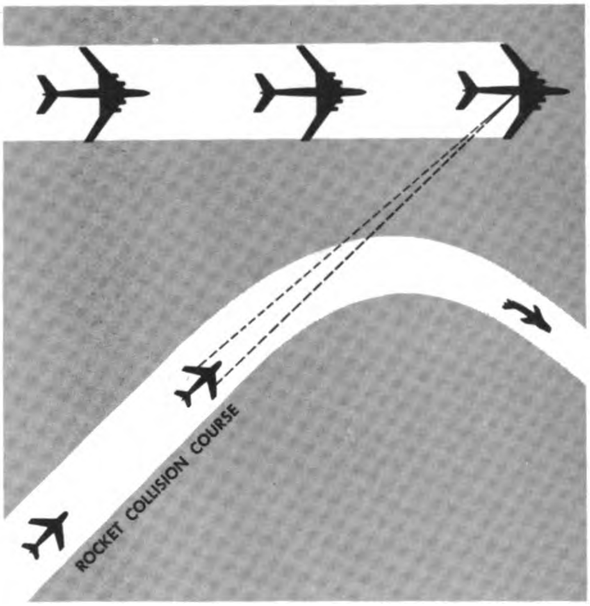

Rocket Collision Course

present position of the aircraft, intersects the flight path of the target aircraft. The attacking aircraft can secure a hit on the target at one point, and one point only, during the attack. This is the instant when the time required for the projectile to reach the intersection of the two flight paths just equals the time required for the target to reach the intersection.

THE BOMBING PROBLEM

Bombing is to some extent a special problem for fighter aircraft, because, unlike a rocket or a projectile, the bomb has no self-generated velocity but must depend on the velocity imparted to it by the launching aircraft and by gravity. In bombing, there is no velocity jump, but gravity drop becomes comparable in importance to lead.

In dropping bombs two types of courses are important: dive bombing and toss bombing.

Dive Bombing

In a dive-bombing run, the aircraft approaches from the horizontal and is made to follow a downward-curving, ever-steepening path that at one point becomes tangent to a free-fall trajectory to the target. This type of course is illustrated in the drawing on the next page.

Toss Bombing

In a toss-bombing run, the aircraft approaches the target first at a fixed dive angle, then in a constant *g* pullout straight ahead, as shown in the drawing below. At some point during pullout, the path becomes tangent to a free-fall trajectory, at which point the bomb is released.

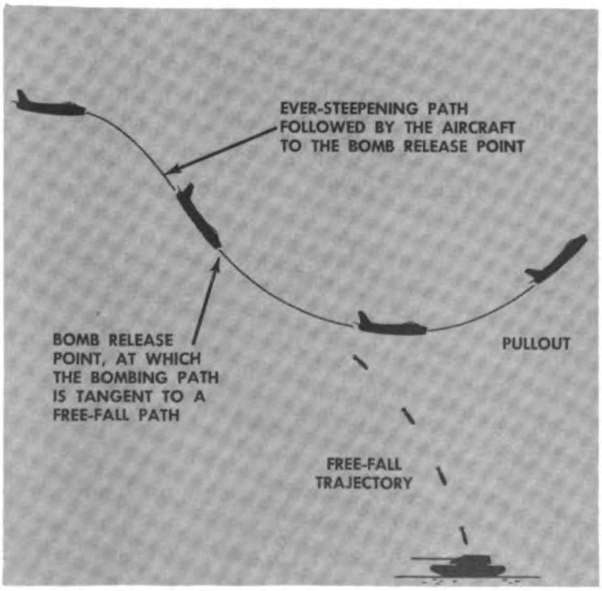

Dive Bombing with Fighter Aircraft

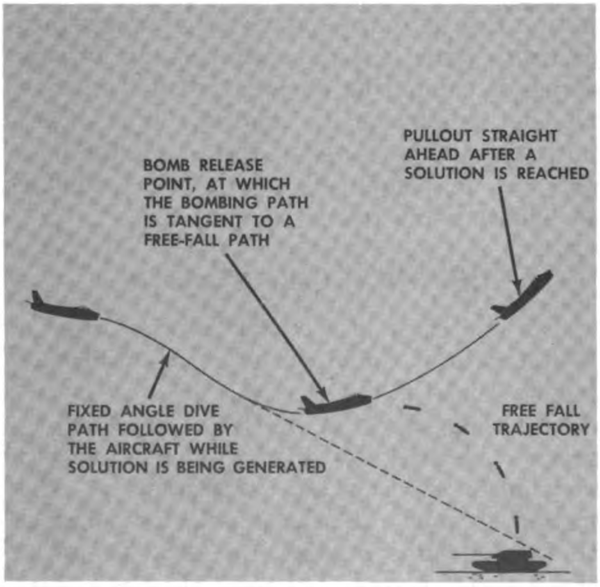

Toss Bombing with Fighter Aircraft

Digitized by Google

CHAPTER 2

fighter weapons systems

The high speeds of fighter aircraft make some form of computing gunsight a necessity. However, whether the computing is done by mechanical or electromechanical devices or by human calculation, the general principles are the same. Each method may handle the problem differently, but to be successful all of them must produce the same answer.

Two general types of computing sights are in present use with fighter aircraft of the Air Force. The K-series sights have been in use for air-to-air gunnery since World War II. The A-series sights were used extensively in Korea.

This chapter begins with information on early aiming systems and fixed optical sights, leading to a discussion of the technique of estimating range and lead with fixed sights. Material is then presented outlining the framework of the fighter weapons systems now in use. General information on computing systems is followed by descriptive material on the manually ranged (stadiametric) portion of the K-series of sights. General information on radar systems introduces discussions of the K-19 radar-ranged sight and of the A-series sights. Explanations are given of the functioning of the A-series sights during gunfire, rocketfire, and bombing. The malfunctions of the A-series sights are listed. Token mention is made of the M-1 toss bomb computer. The chapter closes with a discussion of the AN/APG-30 radar system.

EARLY AIMING SYSTEMS

At the start of World War I it was found that the airplane could be used advantageously against the enemy. At first, the airplane was used to observe enemy troops and supply movements only. Soon a rivalry developed between the opposing observer pilots, and a new type of human being was born — the fighter pilot.

The first fighter pilots downed enemy aircraft by dropping scrap metal into the opponents' propellers, or by close range fire with small arms ammunition. Soon after the beginning of the war, guns were installed on aircraft. At first, the pilot fired his guns without the aid of a sight. He merely pointed the nose of the aircraft at the target, and pulled the trigger. The results were poor. It became apparent that some sort of an aiming device was needed for the pilot to deliver his armament effectively. This led to the development of the first aiming system.

Two-Post Sight

The two-post sight was the first gunsight. It consisted merely of two posts alined on the forward part of the aircraft fuselage. The two posts were fixed in reference to the guns. The pilot's job in aiming was to position his aircraft so as to aline the two posts with the target. Obviously, this aiming system had its shortcomings. Primarily it did not provide the pilot with a method of measuring target

Digitized by Google

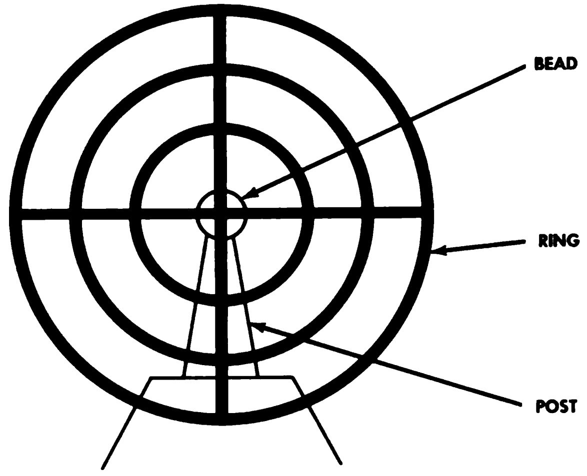

Ring-and-Bead Sight

range or deflection lead allowance. The poor results obtained led to the development of another sighting system.

Ring-and-Bead Sight

The ring-and-bead (or ring-and-post) sight replaced the two posts. This sight consisted of two elements alined on the forward part of the fuselage and fixed in reference to the guns. The rear element was a ring containing coplanar concentric rings and having a center cross. The inner rings were designed so as to divide the horizontal and vertical diameters of the outer ring into six equal segments. The purpose of this was to aid in range estimation. The front element was a bead supported on a post. The sight is shown in the illustration above.

To use the sight, the gunner placed his eye at a predetermined fixed distance from the ring, so that the ring formed a reticle of a known mil value, usually 100 mils. To make a no-deflection shot, the pilot maneuvered the aircraft to aline the cross and bead upon the target. To make a deflection shot, he maneuvered the aircraft so that the cross and bead were alined and pointing out ahead of the target the proper amount of lead.

To estimate range the pilot had to know the wingspan of his target. Using the known wingspan and comparing the apparent size of the target with the size of the 100-mil reticle, he could estimate the target's range.

Most pilots speak of the 100-mil sight as a 100-mph sight. What they mean is that one radius of the sight ring is the proper lead for a 100-mph target at 90° angle-off. This technique for calculating deflection lead allowance is discussed farther on in this chapter.

Although the ring-and-bead sight was far superior to the two posts, it had some shortcomings that are worth mentioning.

a. There was only one eye position that would provide an accurate sight picture for the pilot. The mil value of the reticle was based on the assumption that the pilot would position his eye at exactly a predetermined distance from the reticle. At that distance the angle formed by the reticle with the pilot's eye was exactly 100 mils. If the pilot moved his eye from that position, he spoiled the mil value of the reticle. As he moved his eye closer to the reticle, the mil value increased.

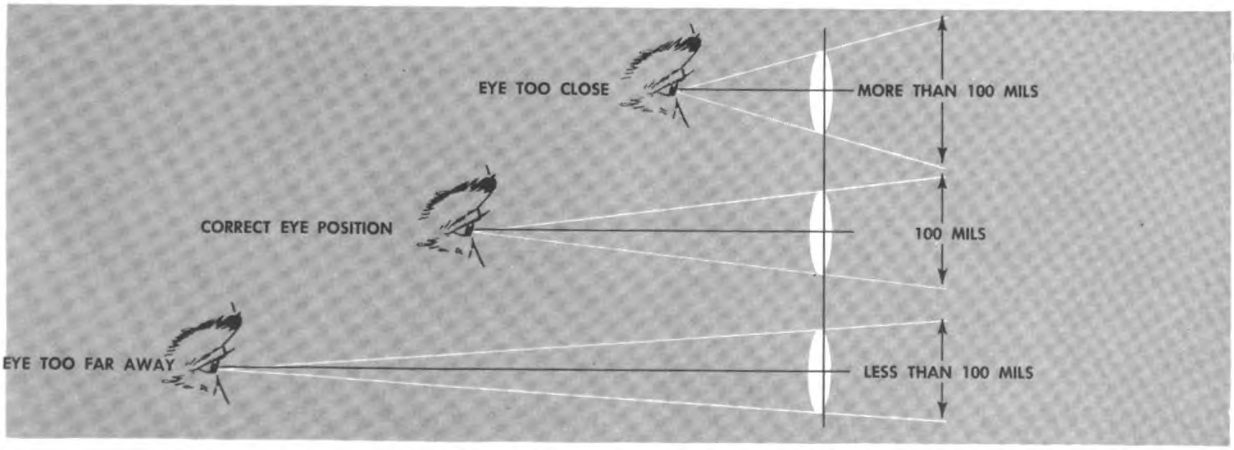

Eye Position Affects Mil Value of Reticle

Digitized by Google

If he moved his eye farther back, the mil value decreased. Errors in head position, therefore affected the accuracy of range estimation. This is shown in the illustration on the preceding page.

b. The pilot had to have the center cross, bead, and target alined perfectly at the time of firing. It has been calculated that if his head was to one side spoiling the alinement by as little as ⅛ inch, he would miss a target by approximately 40 feet at a range of 1,000 feet. It is extremely difficult for a pilot to maintain a head position within a plus or minus ⅛-inch tolerance.

c. The pilot had to aline the center cross, the bead, and the target in his aiming. This meant that he had to focus his eyes simultaneously on the cross a few feet from his eyes, on the bead a little farther out, and finally on the target at hundreds of feet out. This is a physical impossibility for any eye. This made the problem of alining the three references very difficult.

d. Estimating the deflection lead allowance by laying off a number of reticle radii lead ahead of the target was a difficult and inaccurate method. First, there is the problem of focusing the eyes. Add to that the problem of sighting in two directions simultaneously as would be the case in a deflection shot. It is a wonder that the pilot was able to shoot down an enemy aircraft at other than a dead astern or head-on pass.

The ring-and-bead sight was in use from the final months of World War I until after Pearl Harbor. It became apparent at this time that a better sighting system sight was badly needed. Engineers, therefore, set to work devising the optical gunsight which, in principle, is still the same sight in use today.

FIXED OPTICAL SIGHTS

Although computing sights are now standard installations on all fighter aircraft, the successful use of these sights is still dependent on the pilot's knowledge of aerial gunnery as practiced with the *fixed sight*. This is particularly true of the present computing sights, the accuracy of which depends on the pilot's manipulation of the sight controls and his ability to do smooth, coordinated flying.

Characteristics of Fixed Optical Sights

A *fixed* sight for fighter aircraft must provide:

a. An aiming point, or sighting line, which can be harmonized with the line of flight of the aircraft and the bullet trajectories.

b. A method for quick estimation of range and deflection allowance.

c. A method of sighting that is not affected by movement of the pilot's head.

The *optical* sight always gives a clear picture of the reticle image and the target.

In addition, an effective sight must be adaptable to installation in such a manner that it will give:

a. Good visibility with a clear view of the target.

b. Maximum lead allowance over the fighter aircraft's nose.

c. A convenient harmonization adjustment.

Optical System

Though various types of optical sights are in use, their basic principles are the same. There is little difference between the basic design of the optical system of the fixed sight and that of the computing sight. As illustrated below, the optical system has four main parts: light source, reticle, lens, and reflector plate.

Light Source

The light source, or lamp, is usually housed in a cavity designed to keep light losses at a

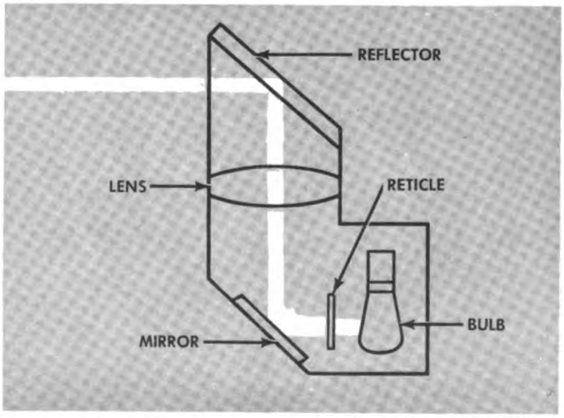

Schematic Drawing of Optical System

Digitized by Google

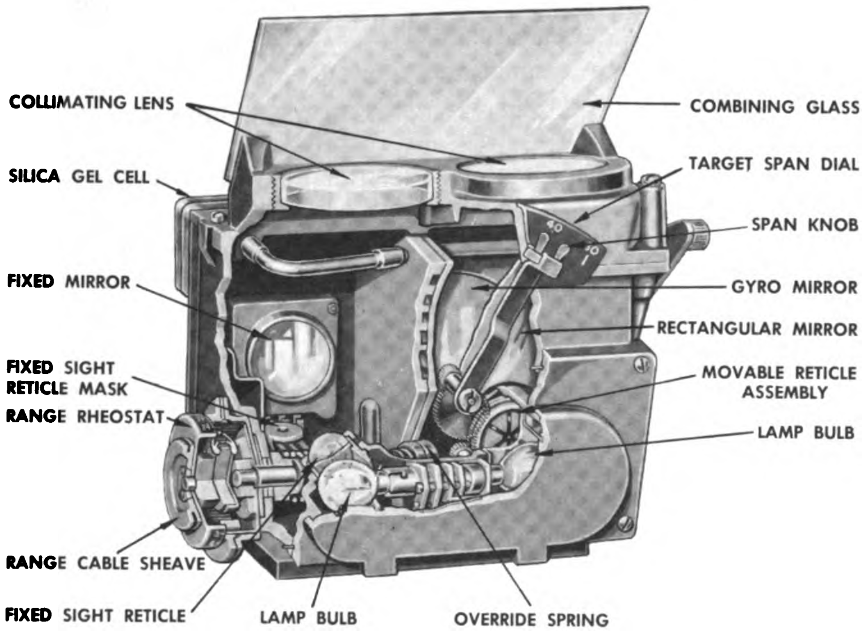

Cutaway Drawing of K-14 Sight

minimum. All surfaces of the cavity that are exposed to light are finished to produce as high a degree of reflectivity as practicable. A housing door is provided in such a manner as to be light-tight, affording the pilot a means of access for quick interchange of light bulbs in case of light failure during flight.

Reticle

The ring and pipper image is formed from the reticle. The reticle is a thin metal plate installed between the light source (bulb) and reflecting mirror, or, in some cases where no reflecting mirrors are used, between the light source and the lens. This plate is perforated with a circle (the ring) and a pinpoint hole (the pipper). The remainder of the plate blocks off all light rays except those passing through the perforation. The reticles are usually small in size, the diameters ranging from ½ to 1 inch.

Lens

The lens is a collimating type.

EFFECT OF LENS ON THE PIPPER. All of the light rays from any one point on the reticle are collimated, that is, are made parallel when they pass through the lens. Therefore, the pipper is made up of parallel, or collimated, light rays. This effect may be visualized if,

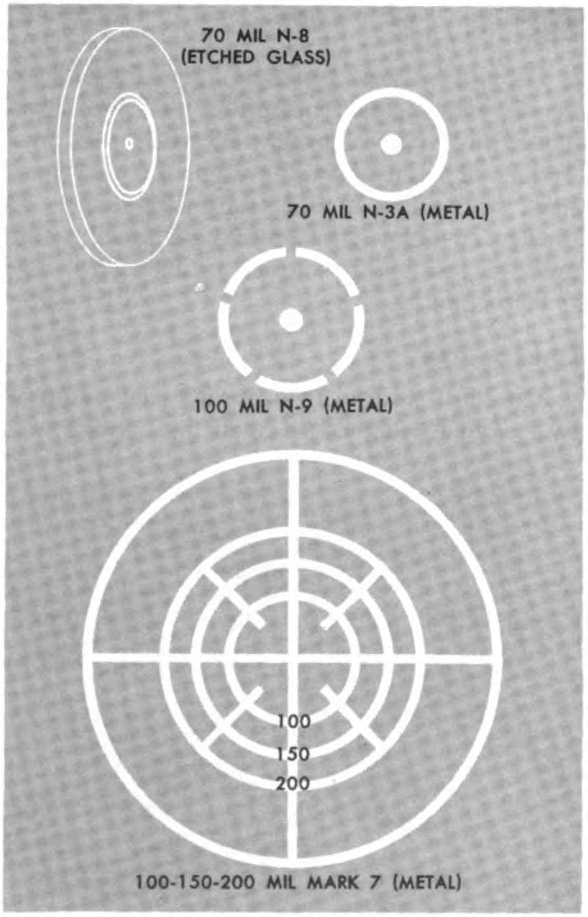

Reticles

Digitized by Google

for the parallel light rays seen as a pipper, there is substituted a bundle of hollow tubes or columns that are parallel.

Because of the collimation of the light rays, the pilot can move his head, yet the pipper remains on the target. Of course, in the case of the hollow tubes, if he moves his head too far, he will not be looking through any tube; or, in the case of the light rays, he will not see any pipper.

Effect of lens on the ring. As they pass through the lens, all the light rays coming from the ring cut in the reticle are collimated, or transformed into parallel rays of light. The lens forms these parallel rays of light into a cylinder.

Reticle image. The cylinder and the column of light appear as a ring and a dot of light on the reflector plate. This ring and dot of light are the reticle image. Because of the refractive effect of the lens, the reticle image can be seen by the pilot on any portion of the reflector plate. This condition permits the pilot to move his head in any direction

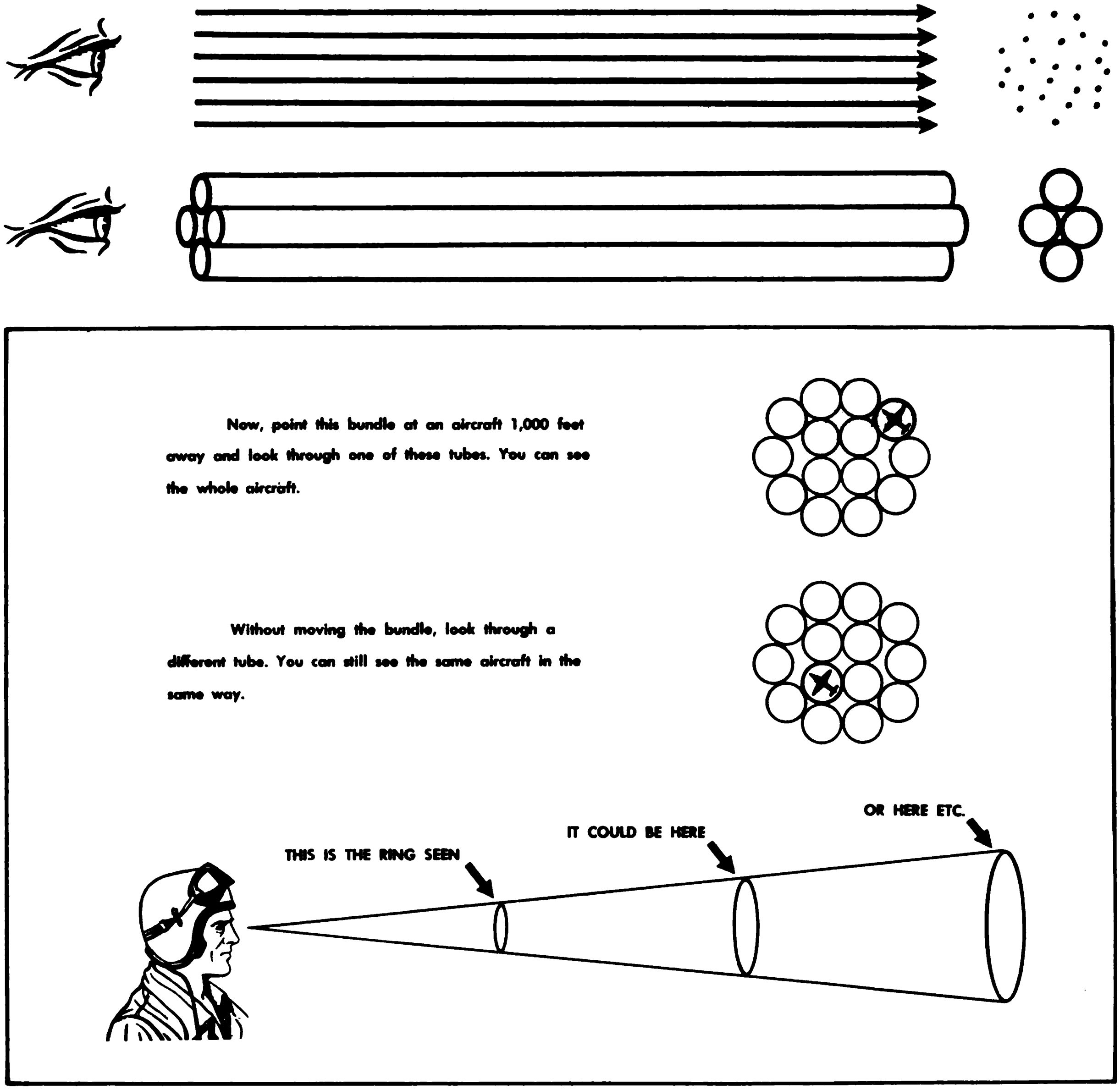

Now, point this bundle at an aircraft 1,000 feet away and look through one of these tubes. You can see the whole aircraft.

Without moving the bundle, look through a different tube. You can still see the same aircraft in the same way.

Effect of Parallel Light Rays

(within limits determined by the size of the lens and reflector plate) without altering the relationship between the reticle image and the target.

The reticle image can be extended to any distance regardless of where the eyes are focused. As a result, when the eyes are focused on the target, the ring and pipper appear at the same focal distance as the target. This eliminates the tiring and inefficient necessity of constantly refocusing the eyes as was necessary with the iron ring and post.

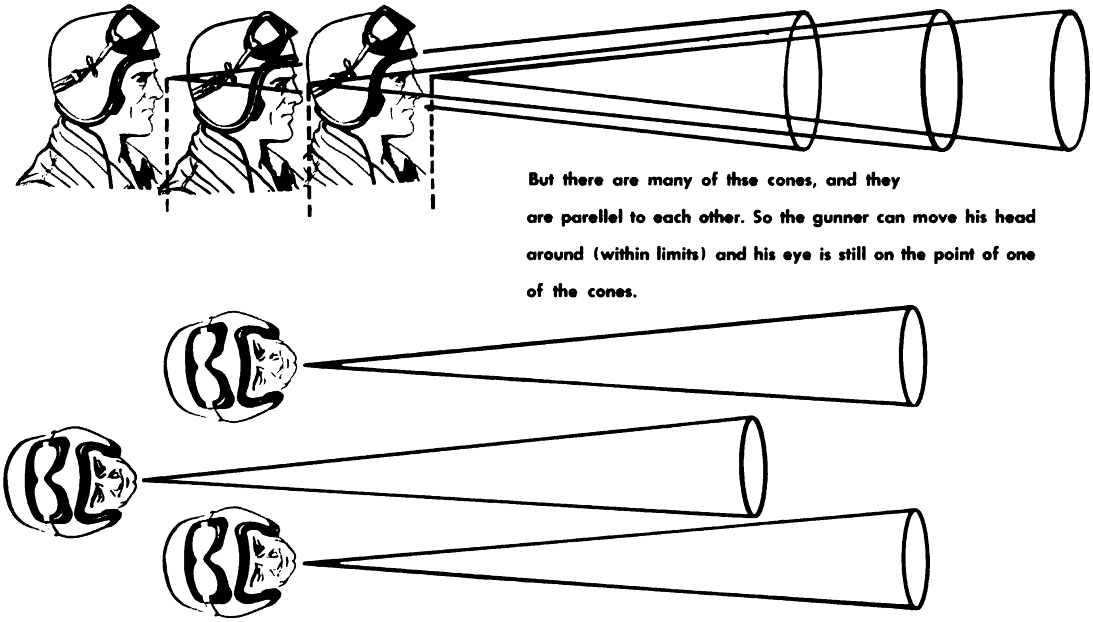

But there are many of thse cones, and they are parellel to each other. So the gunner can move his head around (within limits) and his eye is still on the point of one of the cones.

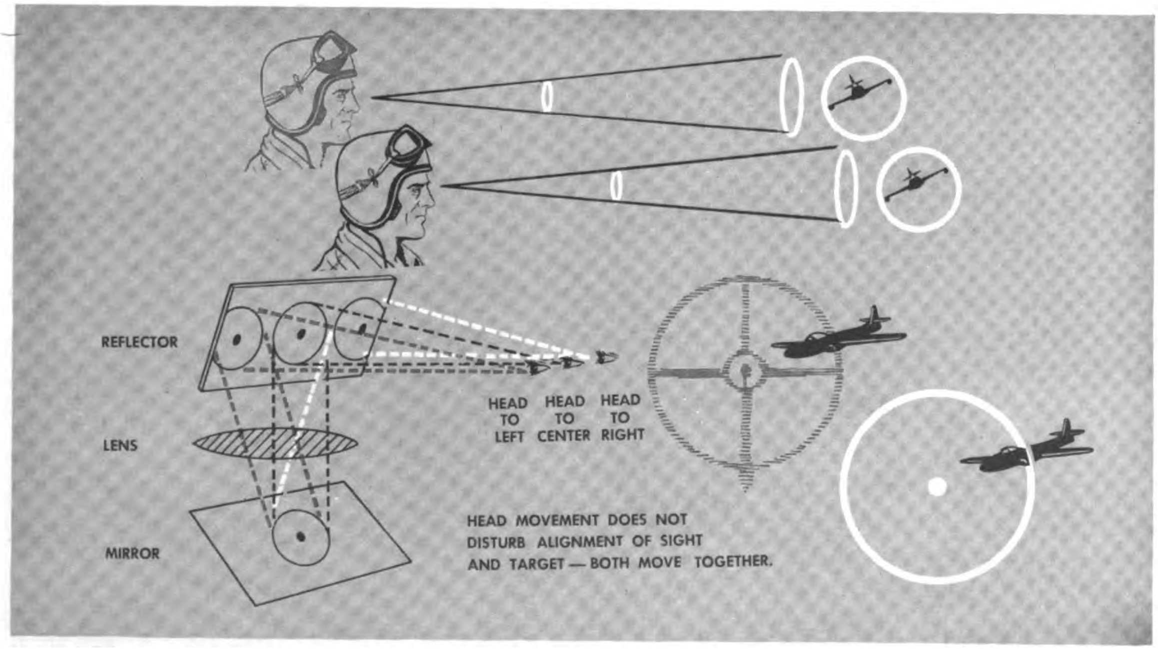

HEAD MOVEMENT DOES NOT DISTURB ALIGNMENT OF SIGHT AND TARGET — BOTH MOVE TOGETHER.

Effect of Head Movement

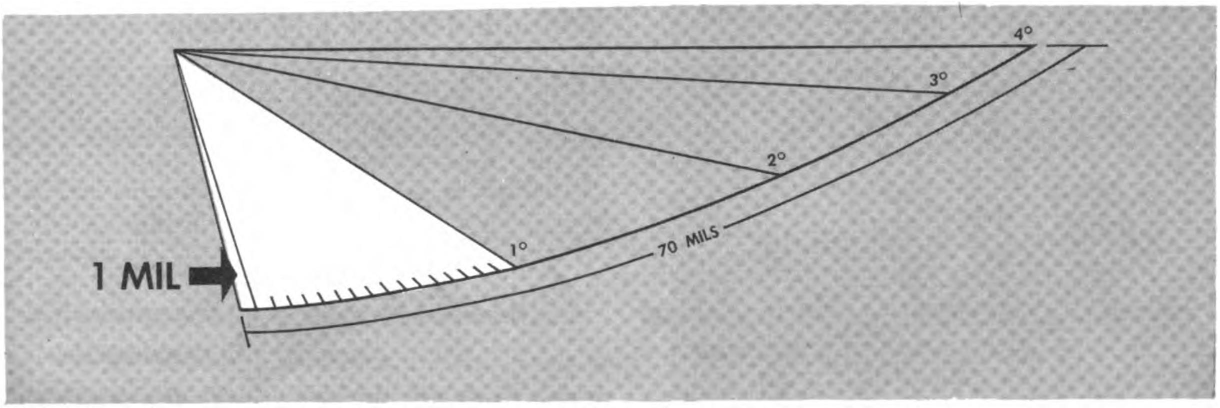

The Mil

Reflector Plate

The reflector plate, which is located on the top of the sight, is that part of the sight that presents the reticle image to the pilot's eye. Being transparent and having a certain amount of reflectivity, the reflector plate permits the pilot to superimpose visually the reticle image on the target.

The Mil

Because the cones of light are parallel, they have equal angular values. Angles are usually measured in degrees, but a degree is too large a unit of measurement for aiming purposes. For example, if a gun barrel is swung 4°, the bullet will miss the target by more than 70 feet at only a 1,000-foot range. Therefore, since a smaller unit of measurement is needed, the 360° circle is divided into 6,400 units. Each unit is 1 mil. The mil is a convenient unit of measurement. At a range of 1,000 feet, 1 mil equals 1 foot.

The diagram at the top of this page illustrates the mil.

Parallax

The term parallax, as used here, is defined as the apparent difference in the position of an object when viewed from two different points.

Whenever the reticle image of the sight moves away from a distant target as the head moves, a condition termed parallax is present. This occurs when the lens is out of adjustment. In this case the light rays coming from the reticle off the reflecting mirror are no longer perfectly collimated after they pass through the lens.

In earlier types of optical sights, lens adjustments could be made by screwing the lens assemblies up or down, but, with the present computing sights, the entire sight head is returned to a qualified depot for the necessary adjustments. Because there is a certain amount of parallax present in all lenses, careful and extremely accurate adjustment is necessary to reduce this condition to such an extent that, when the pilot moves his head, there is no apparent shift between the target and reticle images.

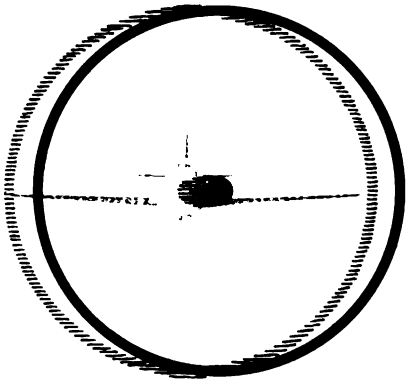

Parallax

Digitized by Google

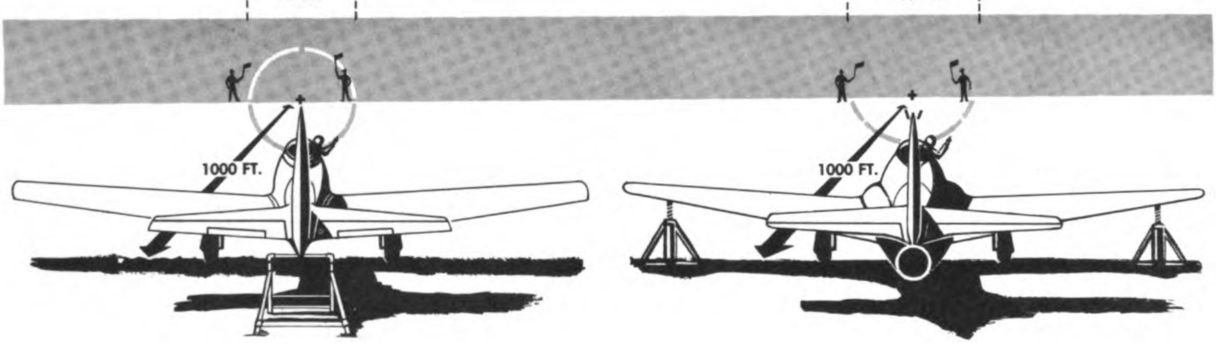

Sight Picture

TECHNIQUE OF ESTIMATING RANGE AND LEAD USING THE FIXED SIGHT

In aerial gunnery, especially with the fixed gun sight, obtaining the correct sight picture is necessary for accuracy. The sight picture is the relation of the sight to the target. If the pilot knows which sight pictures result in hits, if he can fly well enough to get these pictures, and if the guns are harmonized so that bullets properly intersect the sight line, he can hit the target.

Learning the proper sight picture is relatively simple. This is done on the ground. Then, with this knowledge, the pilot attempts to "fly the sight" and hit the target. Flying the sight properly requires intensive and analytical practice, because the bullets, the aircraft, and the pilot have certain limitations.

Normally, the fixed sight is used in event of failure of the gyroscopic sight, in order to check the operation of the gyroscope, or in conjunction with the gyroscopic sight. The pilot measures range and deflection with the fixed sight.

To use any fixed sight in air-to-air or air-to-ground attacks, the pilot must know the size of the fixed ring and the speed value of the sight. In some models of the K-14 sight the fixed ring is 70 mils in diameter, and in others the fixed ring is 100 mils. This is shown in the illustration above.

The ring is formed by a cone of light. It forms an angle (measured in mils) at the eye. The field of view encompassed by the 70-mil ring increases 7 feet in diameter for every 100-foot increase in range. The field of view encompassed by the 100-mil ring increases

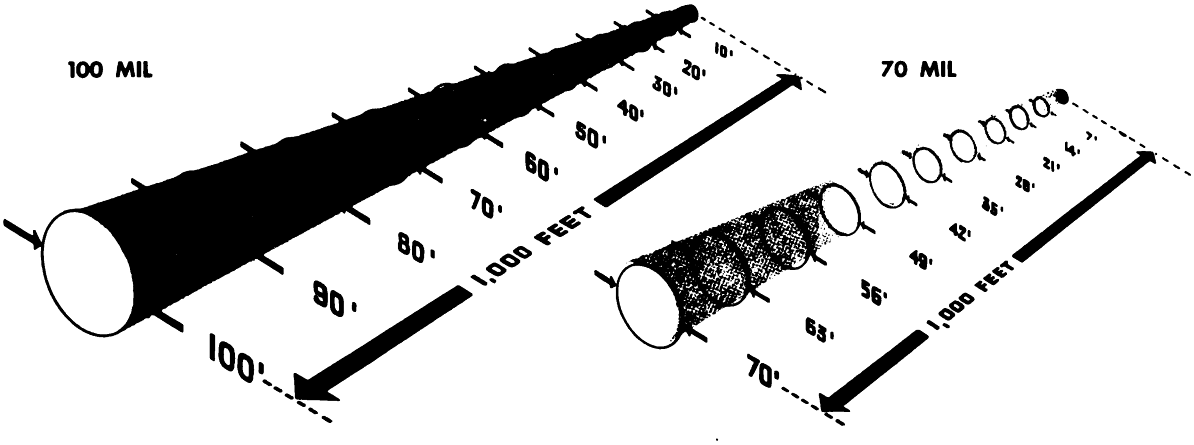

Optical Sight Reticles

Digitized by Google

10 feet in diameter for every 100-foot increase in range.

Since the size of the ring always appears the same but the size of the target appears to vary with range, the range can be estimated if the actual size of the target is known. It fills one-third, one-half, etc. of the ring at various ranges.

Range

Before the gunner can establish a sight picture that results in hits, he must know the limits of effective range and the best range at which to fire. A fighter's machine guns have limitations, as do all weapons. There is a limit to their effective range and to their most effective range.

The farthest range at which the bullets are effective is neither the maximum range the gun can shoot nor the maximum range at which the bullets still have penetrating power. Bullets may be ineffective even when they still have a high velocity and striking power, because with a fixed gun sight, the gunner can only aim them accurately and control their trajectory over short ranges. Aiming is a deflection problem. With the fixed sight, accuracy is largely dependent on the pilot's judgment of range and deflection. A small sighting error is negligible at close range. However, as the range increases, the error is magnified and becomes important.

At a 1,000-foot range, it is difficult for even an expert to hold his sight within 5 or 6 feet of the desired aiming point, and at 1,500 feet it is difficult to hold the sight within 8 or 9 feet. Therefore, since fighter aircraft present a relatively small target area, the pilot's ability to aim becomes a major limitation of effective range.

Various forces beyond the pilot's control affect the bullets and limit their effective range. The cone of bullet dispersion from a caliber .50 machine gun is about 4 mils for 75% of the rounds. The effect of gravity on the bullets is relatively small over ranges requiring less than ½ second of flight, but beyond these ranges, bullet drop increases rapidly. In some aircraft, gun harmonization can compensate for gravity drop of the bullets over the first 1,800 to 2,000 feet when the aircraft is in level flight, and can partially compensate for bullet drop when the aircraft is banked.

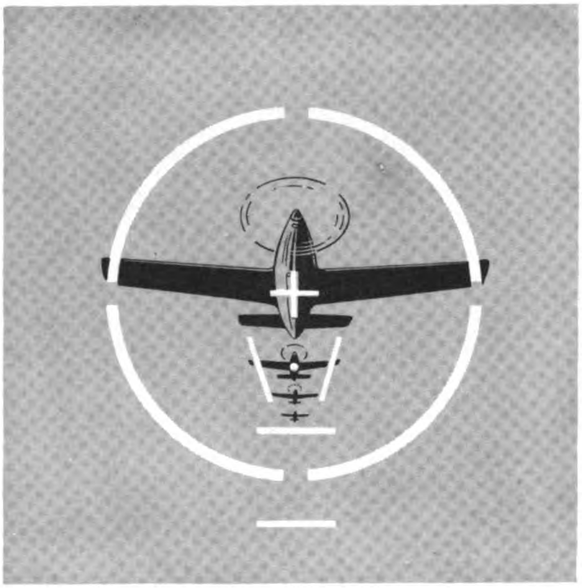

Target in Reticle

Changes in bullet velocity caused by a change of aircraft speed and variable air resistance limit the accurate firing range. This limitation is important because fast-moving targets require lead allowances that are based on carefully calculated bullet-speed data. Because it is difficult to calculate the exact target range, air density, and lead required each moment, and because the range may be decreasing as the pilot is firing at the target, the pilot must use an average bullet velocity. Use of the average bullet velocity gets the best results only at short ranges, because the farther the bullet travels, the greater the error.

Ballistic tables can be used to determine the maximum range at which the target can be led with reasonable accuracy, using an average bullet velocity. They show the maximum range at which changes in altitude and air speed make no appreciable change in the bullet's speed, and the maximum range within which the bullet's time of flight is practically proportional to the range covered. Such a study of caliber .50 AP ammunition reveals that, at a 600-foot range, excellent accuracy is possible because variations in the bullet's time of flight are negligible under all operating conditions of speed and altitude. At a 1,200-

Digitized by Google

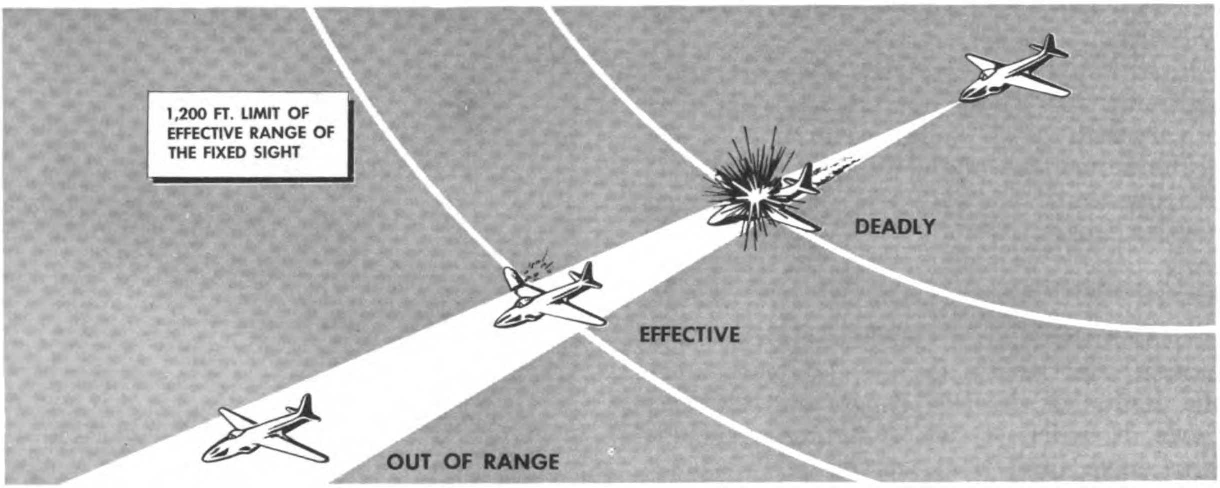

Effective Range

foot range, the bullet's speed is still consistent enough to permit reasonable accuracy. This is shown in the illustration above.

Beyond a 1,200-foot range, changes in time of flight of the bullet under different operational conditions and aiming errors by the pilot using a fixed optical sight are too great to permit accurate lead.

With the use of the fixed optical sight, the limit of effective range is about 1,200 feet and the most effective range is closer and depends on the particular aircraft's harmonization and the pilot's ability. Since the pilot does not remain at the most effective range long enough to get a good burst at that range, he should try to bracket the best range.

Since most combat-deflection shots are less than approximately 30° angle-off, the pilot must use the wingspan for target size and forget about target length. It should be remembered that, at higher angles-off, the foreshortened wingspan does not fill quite so much of the ring as it does at the dead-astern position.

Examples of Range Estimation

The average wingspan of single-engine fighter aircraft is about 35 feet. At firing range, it equals approximately one-third of the *diameter* of the ring of a 100-mil reticle. Two-engine fighters having a wingspan of 50 feet fill about half diameter of the ring at open-fire range.

Aircraft with a 75-foot wingspan fill about three-fourths of the diameter of the ring of the 100-mil reticle when they are in range.

Aircraft with a 100-foot wingspan are in range when they fill the entire ring of the 100-mil reticle.

The pilot should know the wingspans of the types of aircraft he is likely to encounter and visualize the amount of the fixed ring they will fill at the correct firing range. In combat, the fighter pilot does not have time for intricate calculations. Therefore, he should memorize sight pictures for expected targets before takeoff. It should be remembered that these sight pictures are for maximum range. Better hits can be made at shorter ranges.

The standard 6- by 30-foot towed target at 1,200 feet equals three-fourths of the *radius* of a 100-mil sight at 90° angle-off. Since the target foreshortens as the angle-off decreases, it fills just over half of the radius at 45° angle-off and a third at 30° angle-off. All of these sight pictures are computed at the 1,200-foot maximum range limit.

Deflection Allowance

Another step in determining sight pictures using the fixed sight is estimating the amount of deflection. If the target is moving directly toward or away from the pilot, there is no deflection problem. All that is necessary is to aim straight at the target, fly smoothly, and open fire when within range.

Digitized by Google

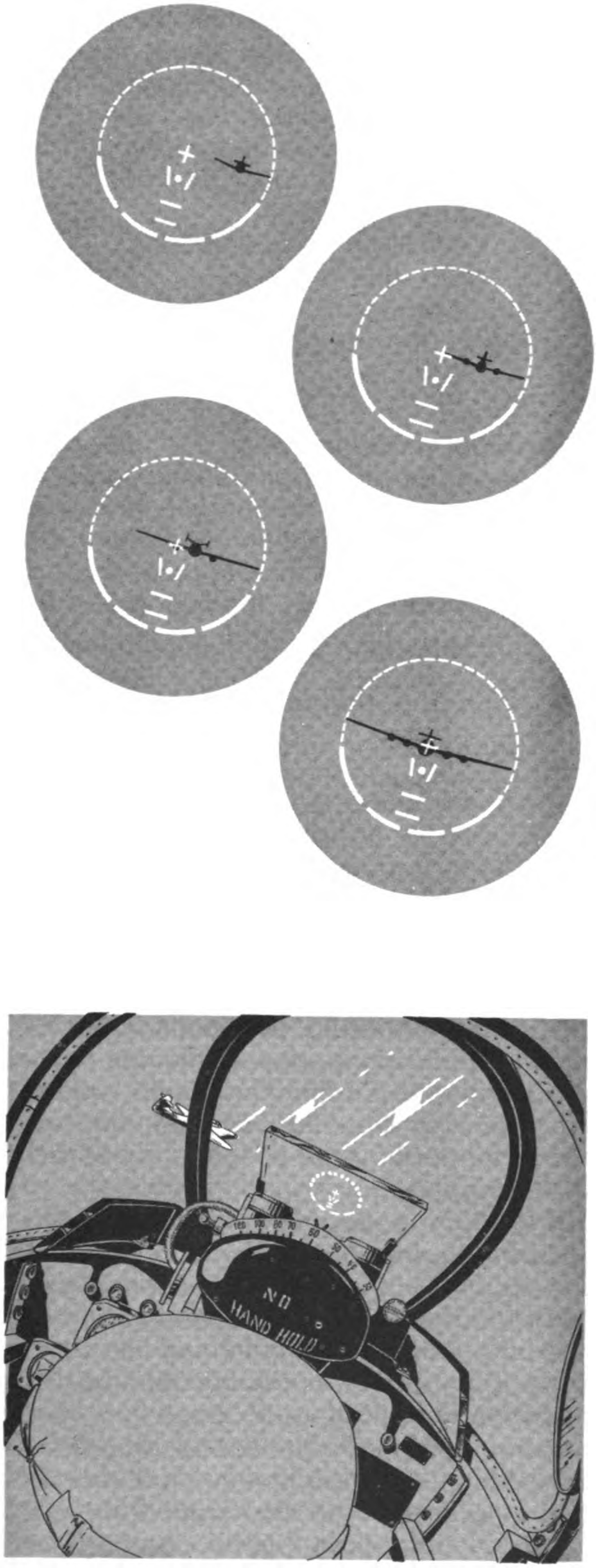

Range Estimation

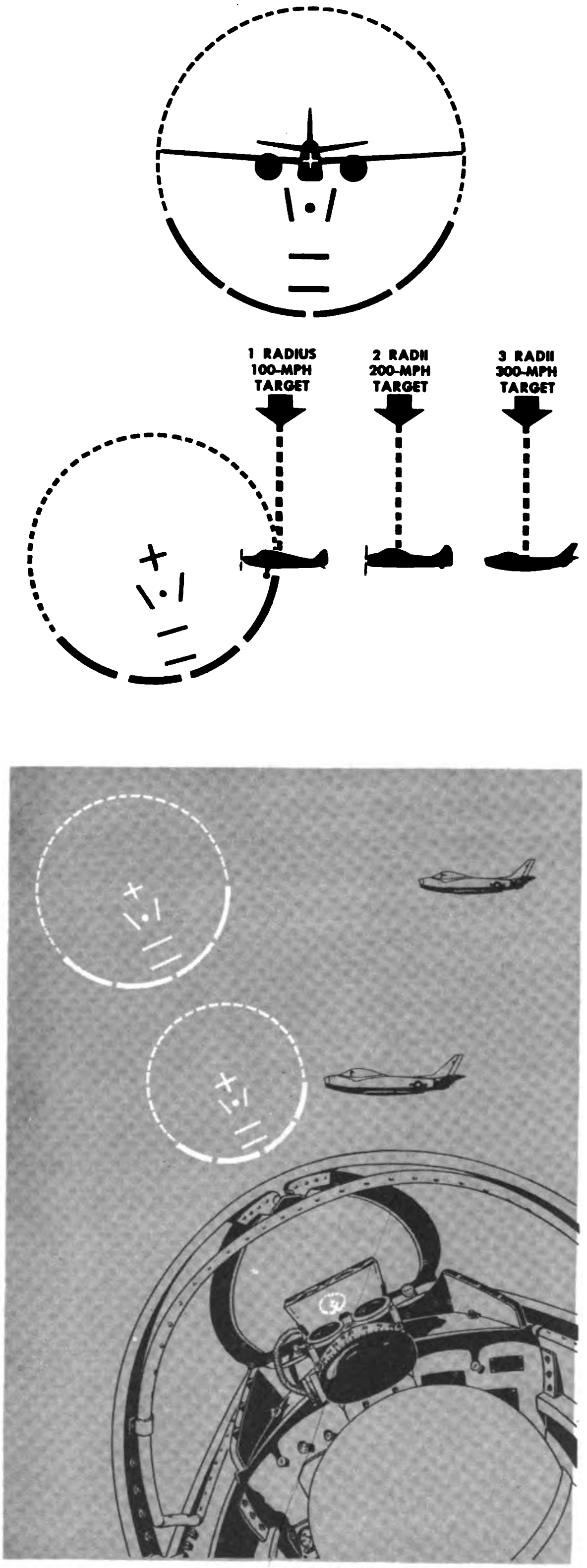

Deflection Allowance

However, most aerial shooting requires deflection allowance, unless the attack is made with complete surprise and there is no opportunity for evasive action by the target. Whether the necessary deflection is large or small, the exact amount must be allowed. If the pilot is not dead astern, pointblank aim may result in misses. The following information will be useful in estimating deflection allowance.

Lead Value of a Fixed Sight

The lead value of a fixed optical gun sight is based on the assumption of a certain average bullet velocity and on the speed of the target crossing the line of sight at 90°. This lead value is for all practical purposes independent of range. That is because, as the size value of the ring increases with range, the necessary increase in lead is thereby compensated for. The radii of lead for any one angle-off is the same regardless of range if the range the bullet is to cover is such that the bullet velocity remains fairly constant. The formula for determining lead value in mils is:

$$\text{Lead in mils} = \frac{\text{target speed (ft./sec.)} \times \text{sine of angle-off} \times 1{,}000}{\text{average bullet velocity}}$$

For the purpose of explaining the procedure in determining the lead value of a fixed optical sight for a 90° angle-off, the following conditions are assumed: speed of firing aircraft, 350 IAS; target speed, 200 IAS; altitude, 15,000 feet; range, 1,000 feet. The procedure is as follows:

1. Convert the indicated airspeed (IAS) of the fighter aircraft and the target to true airspeed (TAS) by increasing the IAS by 2% per 1,000 feet of altitude:
   a. Fighter speed:
      $350 \times 30\% = 105$
      $350 + 105 = 455$ TAS
   b. Target speed:
      $200 \times 30\% = 60$
      $200 + 60 = 260$ TAS
2. Convert miles per hour to feet per second by multiplying miles per hour by 1.47.
3. To find the average bullet velocity for a given range, refer to a ballistic table for the type of ammunition used and ascertain the time of flight of the bullet for a given range. For example, for AP M2 ammunition, for a 1,000-foot range, the tables give a figure of 0.31 second (this figure includes correction for altitude and aircraft speed). Next, divide the distance the bullet travels by the time of flight to obtain the average velocity for that range:
   $0.31 =$ time of flight
   $1{,}000$ feet $=$ distance traveled
   $1{,}000 \div 0.31 = 3{,}225$ feet
   (average bullet velocity).
4. In the formula substitute:

$$\text{Lead in mils} = \frac{382 \times 1 \times 1{,}000}{3{,}225} = 118.4$$

The required lead in mils for a 90° deflection shot under the above conditions would be 118.4 mils. Dividing the number of mils of lead by the number of mils of the radius of the reticle ring gives the radii lead necessary. For a 100-mil reticle ring size, the radii of lead for 118.4 mil lead would be $\frac{118.4}{50} = 2.36$. For a 70-mil reticle ring, the radii of lead would be $\frac{118.4}{35} = 3.38$.

Up to this point the discussion has dealt mainly with 90° deflection. The necessary deflection decreases as the angle-off decreases, becoming zero when the firing aircraft is dead astern of the target.

The amount of lead required for angles-off which are less than 90°, using the same conditions that were used to determine the 90° angle-off lead, is the same as the sine of the lesser angle-off. To find the proper lead for angles-off less than 90°, multiply the lead needed for the 90° angle-off by the sine of each of the lesser angles.

The above figures are obtained by first finding the necessary lead for the 90° angle-off and then other angles-off for one set of conditions, that is, one attacking speed, one type of ammunition, one altitude, and one target speed. These figures are obtained without consideration of angle-of-attack errors.

Before you go up to fire at a target, create a mental sight picture of how you will vary the lead as you turn with the target. This sight picture should include range estimation, that is, the comparative sizes of the ring and the target.

Digitized by Google

Angle-off	Sine	Mils Lead	Radii Lead	
			100-Mil	70-Mil
90°	1.	118.4	2.36	3.38
80°	.9848	116.6	2.32	3.33
70°	.9397	111.2	2.2	3.2
60°	.8660	102.5	2.	3.
50°	.7660	90.6	1.8	2.58
40°	.6428	76.1	1.3	2.17
30°	.5000	54.2	1.16	1.54
20°	.3420	40.4	.8	1.15
10°	.1736	20.5	.4	.5
5°	.0872	10.3	.2	.3

Sines

It is not easy to recognize various angles-off, and learning to do so requires much practice. However, quick recognition of angles-off is essential.

The foregoing applies only to the fixed sight, as the computing sight has no lead value.

Alinement

The comparatively narrow width of aerial targets in deflection shooting makes alinement of the pipper with the target very important. At normal firing ranges, target widths are usually approximately 6 mils, and a high degree of skill is required to hold the pipper within this area. Attaining a high degree of skill requires much practice in flying the sight. Practice coordinated turns at various rates, flying the sight exactly along the horizon until you attain precise control of the sight.

Sometimes a target does not go in the direction of its longitudinal axis. You must train yourself to recognize the true line of flight. An accurate estimate of target speed indicates flight direction. For example, aircraft fly nose down at high speeds and nose-high at slow speeds. Observation of target movement against the background also helps you to estimate the true line of flight. You can do this by focusing on the sight with the target off the center of vision. You should be line-of-flight conscious and practice estimating it at every opportunity in the air and on the ground.

With a computing sight, alinement is little cause for error because the pipper is placed directly on the target, but holding the pipper on the target during the process of tracking becomes vital.

FIGHTER WEAPON SYSTEM FRAMEWORK

The fighter weapon system is the total air effort required to shoot down the target. It consists of the pilot, the aircraft, the gunsight, and the weapon. Weapon systems follow the same general pattern of operation.

The general system consists of seven basic elements. These are the comparator, pilot, aircraft, computer, range generator, summer, and weapon. These elements are shown in the illustration below.

The system operates to point the weapon in the direction to hit the target. The comparator indicates to the pilot which direction the aircraft should follow, and the pilot then flies the aircraft along that direction. The computer generates the prediction necessary, basing it on the direction that the aircraft is flying and using the range information. The computer provides continuous correction information to the pilot. This is the general pattern of operation, independent of mechanization.

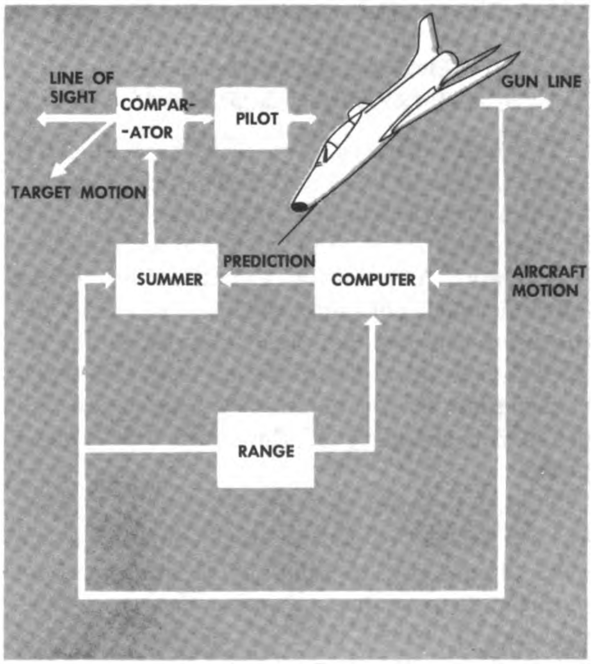

Fighter Weapon Systems

The first fire control systems were those used in World War I. Mechanically they consisted of a pilot, an aircraft with its weapon, and a fixed reference mark. In this system the pilot fulfilled many of the functions in the fighter weapon system. He flew the aircraft and from the motion of his own aircraft and the motion of the target, and by estimating his range, he computed a prediction for his aircraft. He then flew the aircraft and brought his fixed reference ahead of the target enough to score hits.

Today's most complicated fighter weapon systems have relieved the pilot of many of those functions and have made the computation of the prediction much more accurate. In the case of both the K-14 type and the A-1 type of gunsight, they now serve as the computer, comparator, and summer. Radar serves as the method of measuring the range. For a fighter weapon system employing a computing gunsight, the pilot need not compute his prediction but instead depends on the gunsight to furnish this information. In the case of the A-series gun-bomb-rocket sights employed on the AN/APG-30 radar, the computer, range, summer, and comparator portions of fighter weapon systems are mechanically present.

The gunsights are discussed in detail later in this chapter, and it can be seen how they fit into the general weapon systems.

GENERAL INFORMATION ON COMPUTING SYSTEMS

The main disadvantage of firing with fixed sights (ring-and-bead and early optical sights) was the great amount of experience and training required for a pilot to learn to fire them effectively. A sighting system that would automatically compute the required lead for the pilot was needed. Such a sight would reduce the amount of training necessary to teach a new pilot to fire accurately and would improve the accuracy of the more experienced pilots.

Engineers came up with the idea of attaching gyroscopes to sights, then controlling the gyro movement, to allow it to compute the required lead to hit a target. Shortly before the end of World War II, computing sights began to appear in our aircraft. In the development, an attempt was made to attach gyroscopes to the optical sights then in use, but little success accompanied the effort.

The K-14 was the first computing gunsight used extensively by the Air Force. It was designed from the beginning to be a computing sight and was the first that produced satisfactory results. If ranged properly, the K-14 automatically computed the lead requirement for the motion of the target.

Any gyro sight will compute the trajectory shift component of the prediction problem if it is properly calibrated, and if the proper range information is fed into the sight at all times throughout the pursuit curve. K-14 sights that were accurately calibrated automatically calculated the trajectory shift for the pilot in addition to the target motion lead. However, for the sight to do this, it was necessary for the pilot to supply accurate range information to the sight continuously. In addition, pilots had to estimate the lead requirement for gravity drop which is always present and acting upon a projectile in flight.

Later computing sights, the A-1 and A-4, went further in solving the prediction problem by including corrections for gravity drop and air density in addition to trajectory shift and lead for target motion. These sights simplify the lead problem to such an extent, that it is merely necessary for the pilot to *smoothly* keep the pipper on the target and then fire when in effective range to obtain hits.

Theory of Computing Gunsights

All computing sights may be classified into two general groups.

a. *K-series* sights contain only one gyro in their computing systems, (K-14, K-13, K-15, K-18, and K-19).

b. *A-series* sights contain two or more gyros in their computing systems (A-1, A-4, A-5).

In each of the above groups, the gyroscopes are utilized somewhat differently; that is, different properties of the gyros are used in each. Gyroscopes have two properties that may be used in computing sights: rigidity in space, and precession.

Rigidity in space is the property of a gyro that causes it to maintain its orientation in

Digitized by Google

space. All K-series gunsights utilize this principle of the gyroscopes. A gyro mounting is referred to as a gimbal. In order for a gyro to exercise the principle of rigidity in space, it must be mounted on a universal gimbal. The gimbal provides complete freedom of movement for the gyro in relation to the unit within which the gyro is housed. It allows the unit housing of the gyro to move all around the gyro without affecting the gyro position in space.

Precession is basically defined as a change in the plane of rotation of the gyroscope. It is the gyroscopic principle utilized by all A-series gunsights. If a torque is applied to a gyroscope, the gyro will precess in response to the torque, resulting in changing the plane of rotation of the gyro. The gyro will resist angular movement in the plane of the torque, but instead will precess or move in a plane at right angles to the original torque. In other words, when a force is applied to a gyro, the reaction to that force will be 90° in the direction of rotation of the gyro from the original force, and the gyro will change its plane of rotation as though the original force were applied at that position. The gyro is mounted on a single-plane-of-freedom gimbal, not the universal gimbal which allows freedom of movement in all directions.

In all cases, the gyroscopes are controlled, to produce the desired lead for the varied conditions. Certain facts are necessary in computing any lead problem. The essential information must be put into the sight computers and applied to the gyros, modifying their movement in such a manner as to cause the gyros to compute the proper lead requirement for us.

All computing sights need two main inputs of information: target range information and target motion information.

Target range information is fed into the sights either automatically by radar, or by stadiametric ranging accomplished manually by the pilot.

The radar measures the range to a target by measuring the time required for a radio impulse to travel to the target and back again. The time information is translated into an electrical signal that is a measurement of the range. When the range is long, the electrical signal is slight. As range decreases, the signal becomes greater. This electrical signal is transmitted into the sight as range information. It is this current that is applied to the gyro and modifies its action for varying target ranges.

Stadiametric ranging (manual ranging) is the responsibility of the pilot. In this method, the pilot has direct control over the size of the reticle, and he can vary the reticle size however he desires. Normally, he controls the reticle size by twisting the throttle grip which in turn is connected either mechanically or electrically with the mechanism that controls the reticle size.

The pilot's job is to adjust the reticle ring so that its diameter will have the same apparent size as the wingspan of the target aircraft. If the target is at close range, the ring will have to be large to span the wings of the target. As range increases the target will seem to become smaller, and the reticle must be decreased in size to keep the wings spanned.

As with radar, this process also controls an electrical signal that is transmitted into the sight to control the gyro with range information. If the reticle is large, a large electrical signal is sent into the sight; as the reticle size decreases with increasing range, the signal becomes smaller. In this method, it is necessary for the pilot to adjust the basic diameter of the reticle to conform to the wingspan of the target aircraft. He must set that wingspan information into the sight before attempting to manually range the target. This properly calibrates the manual ranging system for the particular target selected. Otherwise, the range information to the sight will be inaccurate.

Target motion information is transmitted into the sight by the tracking process in conjunction with the proper range information being fed into the sight. If a pilot tracks a target traveling 200 mph at a given range, he must turn his aircraft at a certain rate. For a target traveling twice as fast, he will have to turn his aircraft twice as fast in order to keep the pipper on the target. The angular velocity of the *tracking aircraft*, that is, the degrees per second through which it turns,

Digitized by Google

is directly proportional to the target speed. The angular velocity of the tracking aircraft is a representation of the target motion. It is this angular velocity information that is fed into the sights and to the gyros. This turning motion of the aircraft results in the gyro being offset from their normal alinement within the aircraft. The amount that they are offset depends upon the range information fed into the sight.

The two inputs are combined in the sight. The electrical signal representing range information is used to control or restrain the gyro action. The larger the current the greater the restraint applied to the gyro movements. Therefore, short ranges represented by large currents result in the greatest amount of restraint upon the gyro action. Longer ranges and smaller currents exert the least control upon the gyros.

As the aircraft turns while tracking a target, the gyro is offset from its normal alinement within the airframe. The amount that it is offset depends upon the range information received. The range information limits the amount that the gyro is offset by applying restraint to retain the gyro in its normal alinement. The greater the restraint upon the gyro, the less it will be displaced, and the smaller the lead computed. This is logical since at close ranges, resulting in maximum restraint, the lead required is small. At longer ranges where a greater amount of lead is required, less restraint is applied to the gyro movement permitting them to compute the larger lead requirement. Therefore, assuming the sight is properly calibrated when the two inputs of range and target motion are combined, the gyro will be offset the proper amount representing the correct lead to hit the target.

K-14 SIGHT

The K-14 is a single-gyro sight designed to compute automatically the correct lead to hit an airborne target with fixed guns from a fighter aircraft. This sight is really two sights in one. One is a computing sight and the other is a noncomputing, or fixed, sight. The only difference between the fixed sight of the K-14 and the earlier fixed sights is a large cross that replaces the pipper. The fixed sight provides a means of harmonization and maintenance checks. It may be used as a standby if the

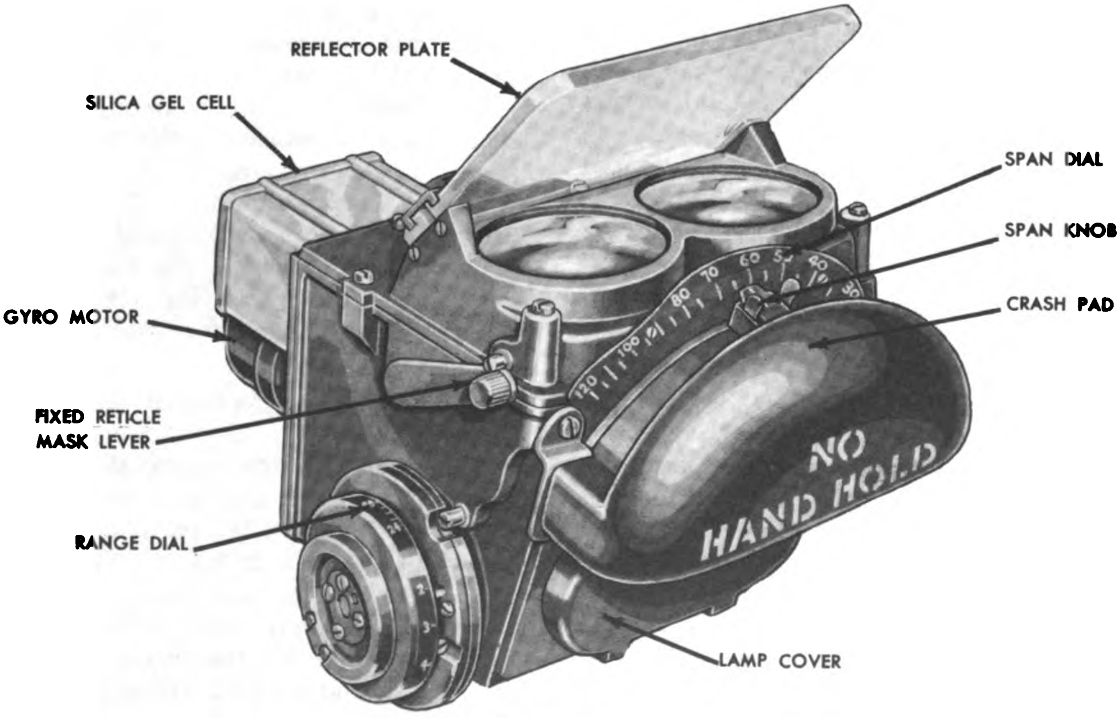

K-14 Sight

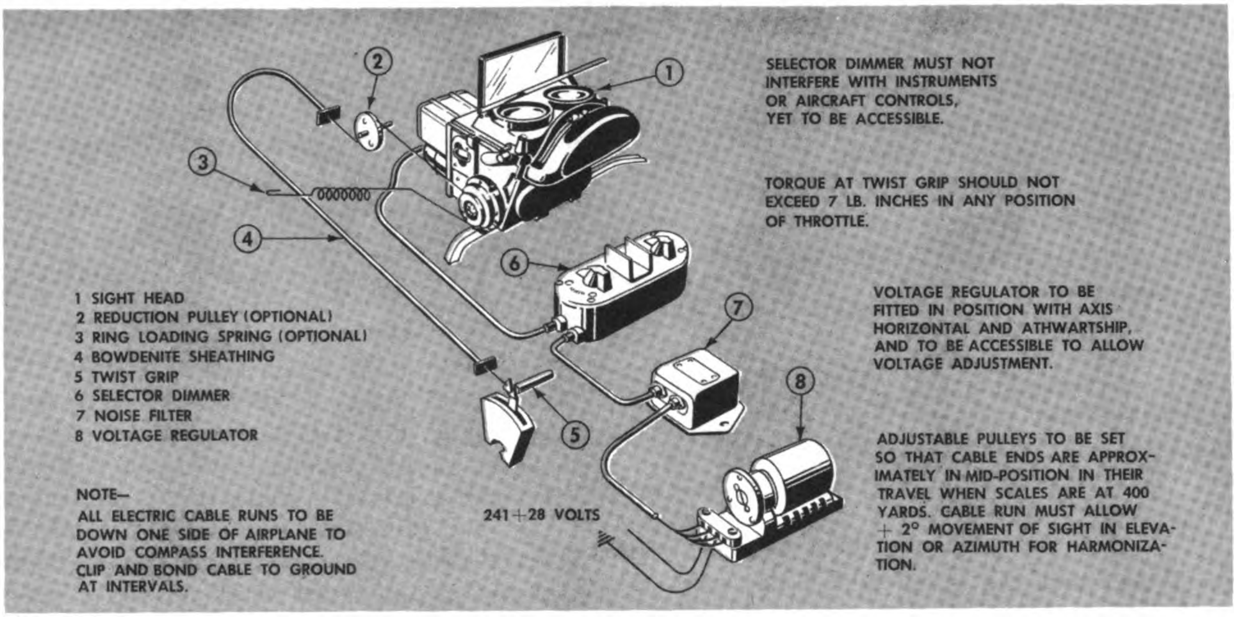

SELECTOR DIMMER MUST NOT INTERFERE WITH INSTRUMENTS OR AIRCRAFT CONTROLS, YET TO BE ACCESSIBLE.

TORQUE AT TWIST GRIP SHOULD NOT EXCEED 7 LB. INCHES IN ANY POSITION OF THROTTLE.

VOLTAGE REGULATOR TO BE FITTED IN POSITION WITH AXIS HORIZONTAL AND ATHWARTSHIP, AND TO BE ACCESSIBLE TO ALLOW VOLTAGE ADJUSTMENT.

ADJUSTABLE PULLEYS TO BE SET SO THAT CABLE ENDS ARE APPROXIMATELY IN MID-POSITION IN THEIR TRAVEL WHEN SCALES ARE AT 400 YARDS. CABLE RUN MUST ALLOW + 2° MOVEMENT OF SIGHT IN ELEVATION OR AZIMUTH FOR HARMONIZATION.

1 SIGHT HEAD
2 REDUCTION PULLEY (OPTIONAL)
3 RING LOADING SPRING (OPTIONAL)
4 BOWDENITE SHEATHING
5 TWIST GRIP
6 SELECTOR DIMMER
7 NOISE FILTER
8 VOLTAGE REGULATOR

NOTE—
ALL ELECTRIC CABLE RUNS TO BE DOWN ONE SIDE OF AIRPLANE TO AVOID COMPASS INTERFERENCE. CLIP AND BOND CABLE TO GROUND AT INTERVALS.

Schematic Drawing of K-14 Sight Installation

FIXED SIGHT
Used For Strafing And Checking Gyro Sight

GYRO SIGHT
Compensates for Velocity of Target Aircraft, Velocity Effect on Bullet, and Apparent Size of Target Aircraft (Range) When the Pilot Swings His Aircraft in "Tracking", the Gyro Dome and Gyro Mirror Lag the Necessary Amount to Correct the Lead. The Resultant Angle of the Gyro Mirror Determines the Exact Distance the Movable Reticle Image Appears Behind the Gun Bore Axis.

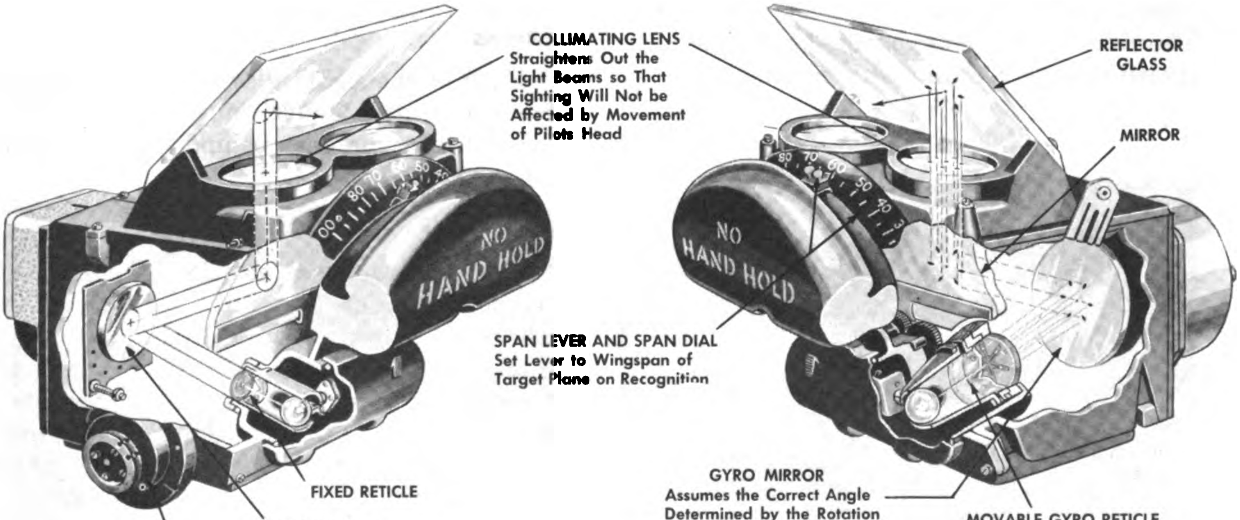

COLLIMATING LENS
Straightens Out the Light Beams so That Sighting Will Not be Affected by Movement of Pilots Head

REFLECTOR GLASS

MIRROR

SPAN LEVER AND SPAN DIAL
Set Lever to Wingspan of Target Plane on Recognition

FIXED RETICLE

FIXED MIRROR

RANGE RHEOSTAT
Controls Current to Range Coils and Spacing of Gyro Reticle Pips

GYRO MIRROR
Assumes the Correct Angle Determined by the Rotation of the Sight and the Current in the Range Coils. This **Current is Controlled Automatically as Pilot Finds the Correct Range**

MOVABLE GYRO RETICLE
Is Controlled by the Span Dial and Range Rheostat Rotation

Fixed and Gyro Sight

Digitized by Google

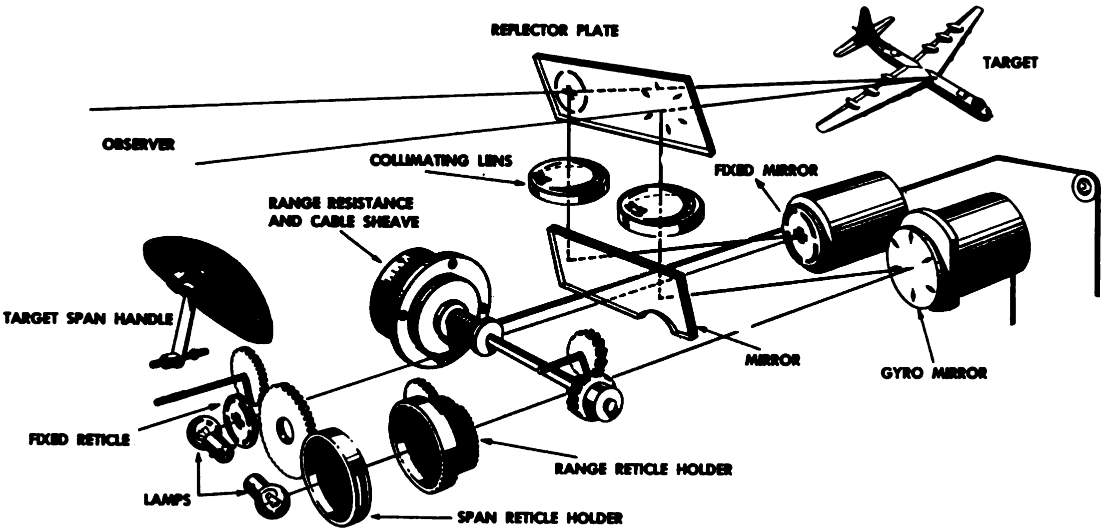

Schematic Drawing of K-14 Sight

computing sight is inoperative. The range of the sight is 600 to 2,400 feet.

The K-14 installation package consists of a sight head, complete with selector-dimmer, voltage regulator, radio noise suppressor, plug package, mounting bracket, and spare lamp package. The twist-grip drive cable for the range drum and the spare lamp holder are furnished by the aircraft manufacturer. The controls operated by the pilot are the selector-dimmer, span setting knob, and twist grip. The controls and components of the sight are shown in the preceding illustrations.

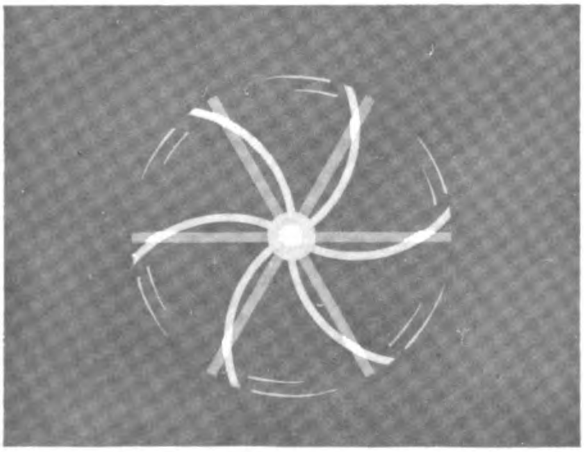

Movable Reticles

Optical Sight Paths

The reticle images are light patterns produced by lamps mounted in line with perforated metal reticles. The light images of the reticle patterns are projected onto the two mirrors of the gyroscopic unit and are reflected by them to a front mirror. The front mirror in turn reflects both images through twin collimating lenses to an inclined combining glass and from these to the pilot.

Lamps

Each of the sighting systems is illuminated by a 12-watt, 22-volt lamp. The lamps are located in a chamber behind the lamp cover on the front of the sight head.

Movable Reticles

Two superimposed reticle disks form the reticle image of the right sighting system. The front reticle design consists of a central round perforation and six radial straight perforations. The rear reticle design consists of a central round perforation and six radial curved perforations. The intersection of the straight and curved perforations forms the reticle image for the right eye — a circle of diamond-shaped dots. The circle can be varied in diameter by rotating either element.

The front disk is rotated by operating the span control knob, located on the front of the sight unit. This sets the position of the front

Digitized by Google

disk to give in feet a circle diameter proportional to the known wingspan of the target aircraft. The rear disk is geared to the range drum on the left side of the housing. A range drive-cable system enables the pilot to rotate the rear reticle disk and thus to adjust the diameter of the reticle image to frame the target and automatically set the range into the sight.

Fixed Reticle

The fixed reticle image of the left sighting system is formed by a single fixed reticle, perforated to form a 71.12-mil circle, and a small centrally located cross. This is commonly called the 70-mil reticle. The reticle image also includes diagonal and horizontal lines and a small dot which lies below the cross. A mask, with a small hole in its center, is provided to blank out all of the fixed reticle pattern with the exception of the cross. The mask is operated by a lever on the left side of the sight unit.

A later type of reticle of the fixed sight has an image pattern, consisting of a centrally located hole with the cross slightly above it. Two diagonal slots, one to each side of the cross and dot, form an open "V" below the center hole. In line with and below the cross are two horizontal slots 30 and 40 mils from the center of the cross. Near the bottom of the reticle is a four-segment arc, 101 mils in diameter. This is commonly called the 100-mil reticle.

Gyroscopic Mirror and Fixed Mirror

Light passing through the reticle is projected to the revolving gyroscopic mirror, which reflects it to the right side of the front mirror. Light passing through the left reticle is projected to a fixed mirror on the back plate, from which it is a four-segment arc, 100 mils in diameter.

Rectangular Mirror

The rectangular (front) mirror is aluminized on its front surface. It extends across the sight housing and is inclined so that it reflects both sighting patterns through the collimating lenses to the combining glass.

Lens Assemblies

The collimating lenses are identical. They are mounted in threaded rings. The lens assemblies are held in position over the mirror by the lens bracket.

Combining Glass

The combining glass (sometimes called reflector plate) is located above the collimating lenses and is inclined so that it reflects the reticle images to the pilot's eyes. The pilot, sighting the target through the combining glass, sees the reticle images superimposed on the field of view. Since the images are projected to infinity, they appear sharply defined even when the pilot's eyes are focused on distant objects.

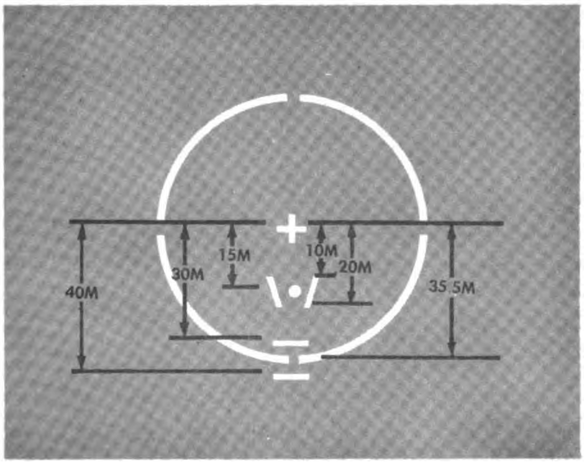

Fixed Reticle Pattern, K-14 Sight, Diameter 71.12 Mils

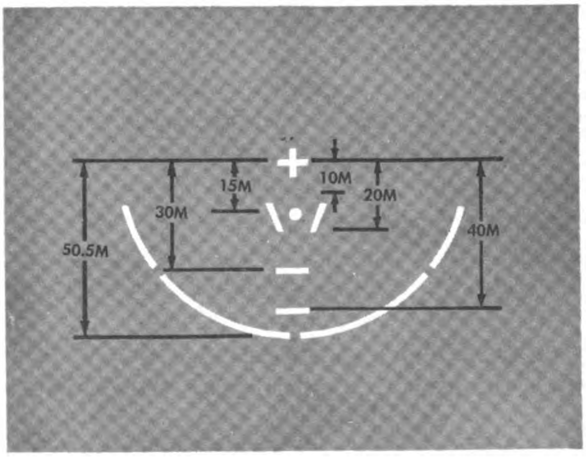

Fixed Reticle Pattern, K-14 Sight, Diameter 100 Mils

Digitized by Google

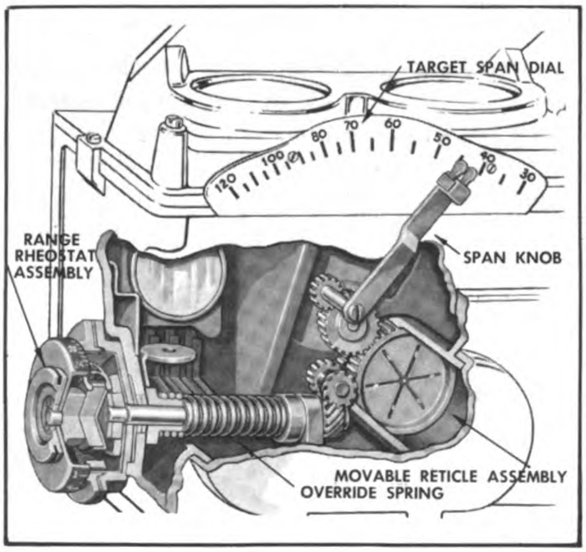

Range Control Mechanism

Span-Control Mechanism

The span-control knob is preset manually to a figure on the span dial which corresponds to the dimensional wingspan of the target aircraft.

The span-control knob is mounted on a shaft which has a pinion at its opposite end. The pinion meshes with an intermediate gear which, in turn, is meshed with the span reticle gear of the gyroscopic reticle. The basic diameter of the right reticle pattern is changed with the span-control knob in accordance with the wingspan of the target aircraft.

Range Control Mechanism

The range drive cable connects the twist grip to the range drum. The range drum is mounted on a shaft which, through a clutch and gear assembly, drives the range disk of the gyroscopic reticle. As light can pass only through that portion of the two superimposed reticle disks where their perforated straight and curved radial lines intersect, the resulting image is a circular formation of six diamond-shaped dots. As either reticle rotates over the other, the diamond-shaped dots move in or out, providing a variable-diameter circle.

The pilot maintains correct range by keeping the target frames within the circle of the diamond-shaped dots. As the range shortens and the target appears larger, the circle is expanded by operation of the twist grip. This action establishes a stadiametric range finder. The initial span setting must be set into the sight with the span lever. The six diamond-shaped dots must be adjusted by the pilot's operation of the throttle twist grip so that they exactly encircle the target aircraft. The range of the target can then be read directly from the range drum.

The basic diameter of the circle formed by the centers of the diamond-shaped dots is preset with the span-control knob. This diameter is then varied in accordance with the range of the target.

The gyroscopic reticle is not designed to accommodate, to the minimum range, a target which nears the maximum in span. For example, if the target has a span of 120 feet, the circle of diamond-shaped dots will reach its maximum diameter at a range of about 900 feet. From 900 feet down to 600 feet (minimum range) the diameter does not change, although the range drum can be turned and the electrical control units function in accordance with the shorter range.

An override spring, which carries the torque of the drive through the clutch assembly, permits continued rotation of the range drum after the reticle pattern has been expanded to its maximum diameter. A scale in feet is provided on the range drum for reference.

The range dial is provided with two scales, one in feet and the other in yards. The yard scale is calibrated 2-3-4-5-6-7-8, whereas the foot scale is calibrated 6-10-15-24. A double zero (00) is assumed after each numeral since the scales are in hundreds of yards and feet.

The range unit also incorporates a resistor, which is varied in value as the range drum is turned for a greater or lesser range. This varies the current fed to the range coils in the gyroscopic unit.

Labyrinth

The air inlet port near the bottom of the sight case is connected with the silica gel cell by means of a labyrinth and a connecting tube. The labyrinth provides a long, tortuous path of small diameter for the air that enters

Digitized by Google

or leaves the sight case through the gel cell. The purpose of the labyrinth and the gel cell is to prevent an excessive amount of moisture from entering the sight head.

Gyroscope and Housing

The gyroscope assembly consists of a rotating mirror, mirror holder, coupling, stem, and aluminum dome. This assembly is driven by the motor through a spring belt and is mounted on a universal joint turning on a ball bearing. Located directly in front of the gyroscope mirror is a rubber-lined bumper assembly. The bumper assembly limits the angular displacement of the gyroscope. Fastened to the gyroscope housing, surrounding the gyroscope dome, and located so that the desired electrical effects may be obtained, are the elevation, gravity, azimuth, and range coils. The range coils are the only coils normally used on the sight. In some installations, however, the elevation coils or azimuth coils are used. The pole pieces of all the coils are always used as part of the magnetic circuit.

Gyroscope Motor

The motor is a series-wound direct-current type. A centrifugal governor speed control is used to maintain a constant speed of 5,200 (plus or minus 200) rpm. A pulley for driving the gyroscope is provided on the governor end of the armature.

Silica Gel Cell

All air entering the sight head travels through a replaceable cell containing silica gel. The silica gel absorbs moisture from the air and thus prevents condensation on the optical surfaces and retards corrosion of aluminized mirror surfaces and metal parts. The cell, formed of transparent plastic so that the condition of the silica gel can be readily checked visually, is mounted on the gyroscope unit immediately above the gyroscope drive motor.

Fixed Mirror

The fixed mirror is mounted on the fixed-mirror assembly directly in front of the gyroscope motor. The mirror is adjustable during harmonization by the use of the two adjustable ratchet-head screws, which are locked in place by clicker springs.

Electrical Connections

Fastened directly to the mechanism plate is a triple-blade contact assembly and a seven-terminal block. The contact assembly makes the electrical connection to the sight unit when the mechanism plate is assembled to the back of the sight unit. The terminal block is used as a convenient means of making electrical connections in the assembly. A 10-conductor shielded cable enters through the back of the mechanism plate and is used to make the necessary electrical connections to the complete sight-head assembly. Fastened to the conductors on the external end of the cable is a 10-pin female socket, which is used to make the electrical connections to the other units.

Sight-Head Mount

A differential-toothed adjusting ring incorporated in the mounting bracket provides a means of alining the sight within 1.778 mils of the mark on the boresight target.

Selector-Dimmer Unit

The selector-dimmer unit consists of a selector switch, rheostat, circuit breaker, and four fixed resistors.

The selector switch is connected to the circuit in such a manner as to permit selection of any one of the three operating conditions: FIXED, FIXED AND GYRO, and GYRO. The three operating positions are marked as indicated above. The switch has a detent mechanism to prevent accidental displacement of the settings.

The rheostat varies the illumination of both the fixed and the moving reticles of the sight. Clockwise rotation of the control knob increases the illumination, and counterclockwise rotation decreases the illumination. Arrows marked BRIGHT and DIM indicate the proper direction of the rotation.

Fixed Resistors

The two 69-ohm resistors limit the maximum current to the range and elevation coils in the sight head. The two 50-ohm resistors, which are connected in parallel to give an effective resistance of 25 ohms, are in use when the selector switch is moved from FIXED AND GYRO to GYRO or to FIXED.

Digitized by Google

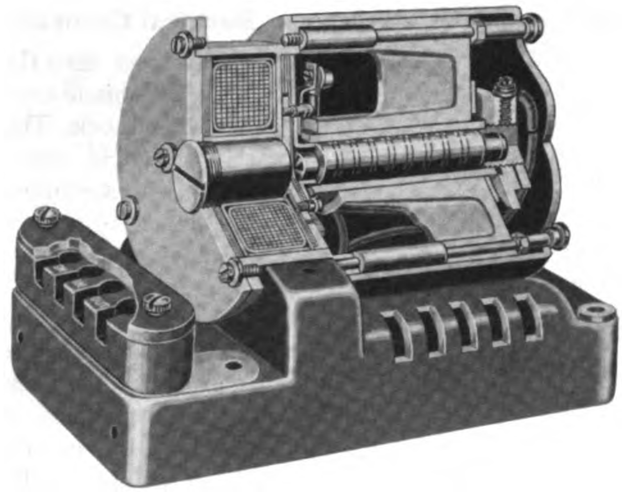

Voltage Regulator

These resistors replace the resistance taken out of the lamp circuits when either lamp is disconnected to prevent voltage variations which would cause changes in illumination at the other reticle.

Voltage Regulator

The voltage regulator is the carbon-pile type, designed to maintain the voltage supplied to the sight at 22 volts, plus or minus 0.5 volt. The input voltage to the regulator must be between 24 and 29 volts.

Voltage control is obtained through a carbon pile (stack of carbon disks) which changes its resistance by change in pressure of the armature contact plug against the carbon pile. When there is light pressure on the pile, the disks tend to separate and reduce the area of contact between them. This separation causes the pile resistance to increase. An increase of pressure on the carbon pile increases the contact area between disks, thus reducing the pile resistance. The compression force on the carbon pile is transmitted by the armature core plug and depends on the difference between the force of the magnet coil and the opposing force exerted by the leaf springs. A bimetal, leaf-spring support compensates for minor temperature variations. Resistors in the base compensate for major temperature variations.

Radio Noise Suppressor

The radio noise suppressor, which consists of a capacitive network, is so designed and located in the power supply system that it effectively filters (traps) any interference that may be introduced into the aircraft's radio receiver as a result of the making and breaking of electrical circuits. The gyroscope motor is the main source of radio interference.

Radio Noise Suppressor

Sight Picture

The pilot observes two images reflected on a reflector plate, one a computing sight reticle and the other a fixed sight reticle. The reticle of the gyroscopic sight consists of six diamond-shaped dots with a pipper in the middle. These diamond-shaped dots form an imaginary circle along the inner points. This circle can be varied in diameter. It is necessary to span the target properly with this imaginary circle. The fixed sight of early models has a 71.12-mil ring and the fixed sight of late models has a 101-mil ring. The 71.12-mil and 101-mil rings are commonly called 70-mil and 100-mil rings and hereafter will be referred to as such in this manual. Both rings have a cross in the center, which eliminates any doubt as to which pipper is to be placed on the target aircraft.

By closing the right eye and looking at the reflector plate with the left, the gunner sees the fixed ring. Reversing the process and looking only with the right eye, he sees the six diamond-shaped dots. Using both eyes, he sees the two images superimposed as shown in the next two illustrations.

Principles of Operation

The pilot views the area directly ahead of his aircraft through the combining glass of the sight head as he is tracking the target. The movable and fixed reticle images seen in the

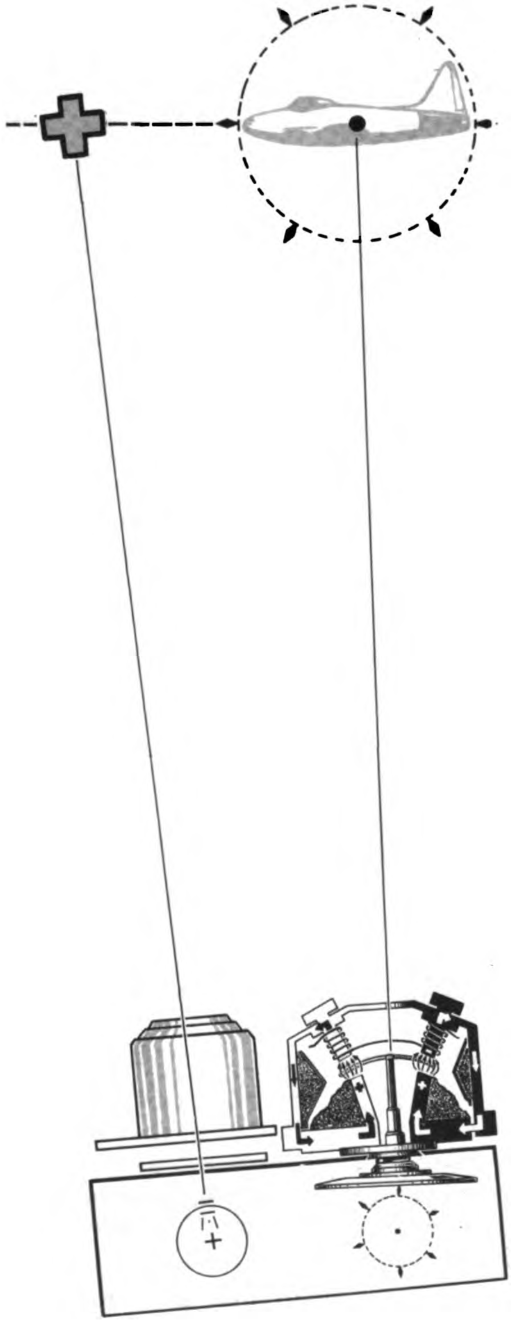

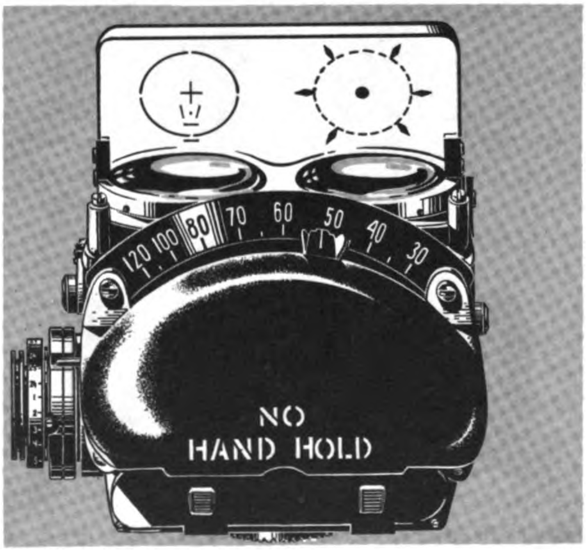

Computing Lead, Target from Right

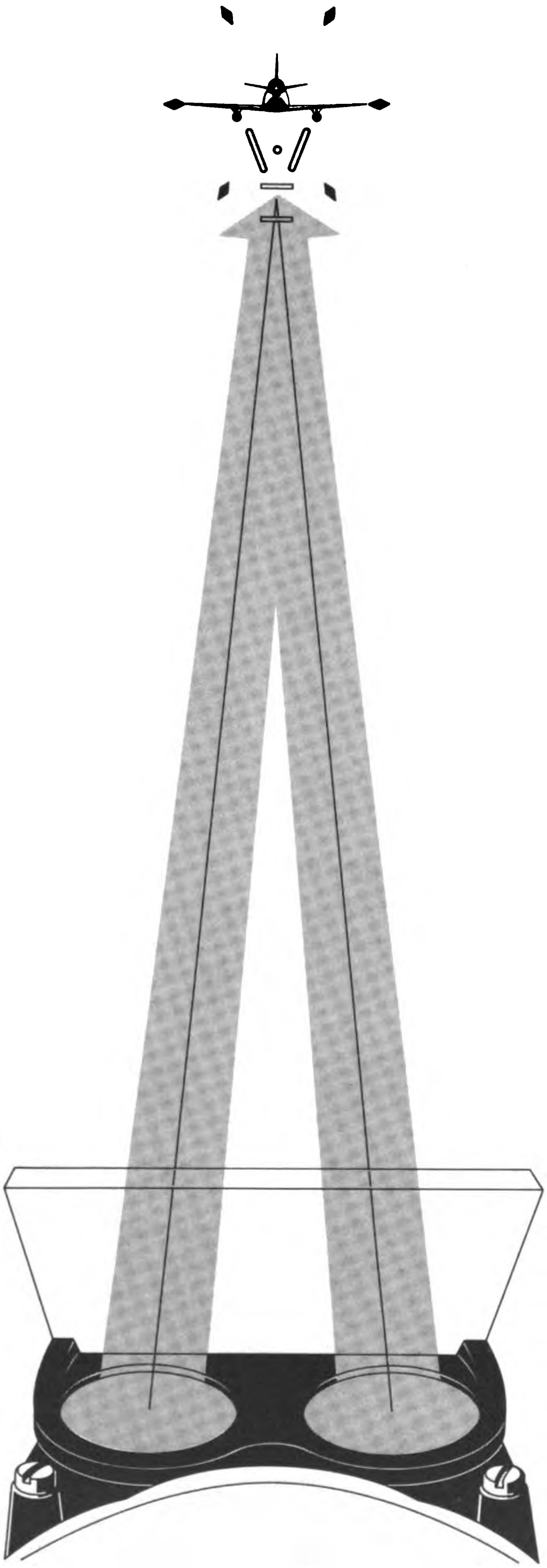

Fixed and Computing Reticles Superimposed at Infinity

combining glass are focused at infinity by means of the collimating lenses. Because the lenses are focused very accurately, parallax is reduced to a minimum to allow motion of the pilot's head without any apparent shift between the position of the target and the position of the reticle image.

The image of the movable reticle is not fixed in space as is the fixed-sight image. Its position is controlled by the action of the gyroscope, which computes the necessary lead. The range is determined by setting in the wingspan of the target and adjusting the size of the imaginary circle formed by the inner points of the six diamond-shaped dots to frame the target. When this is done, the reticle image is shifted the proper amount to provide the correct lead.

SIGHT HEAD. In operation, the gyroscope unit, together with the sight and the associated equipment, makes the necessary corrections so that the angle between the axis of the gun bore and the line of sight equals the correct lead. The position of the movable reticle image is gyroscopically and electrically determined by the gyroscope unit as follows:

The gyroscope assembly is spun by the small, direct-current motor at approximately 2,830 rpm. The assembly, which includes the mirror, stem, and dome, is mounted on the universal joint and has the characteristics of a gyroscope. The assembly is shown in the illustration on the next page.

When the aircraft turns, as in tracking a target, the gyroscope (mirror, stem, and dome operate as one) tends to maintain a fixed plane of rotation, and the angle between the axis of the gyroscope and the flight path changes accordingly. This change of angle is restrained electrically by means of the coils in the coil housing.

The electrical force is used to control the position of the gyroscope mirror and thus determine the position of the movable reticle image.

The gyroscope dome is located so that it spins between the range coils and cuts the magnetic field created by the two coils. Small currents, known as eddy currents, flow in the spinning dome in such a way as to pro-

Digitized by Google

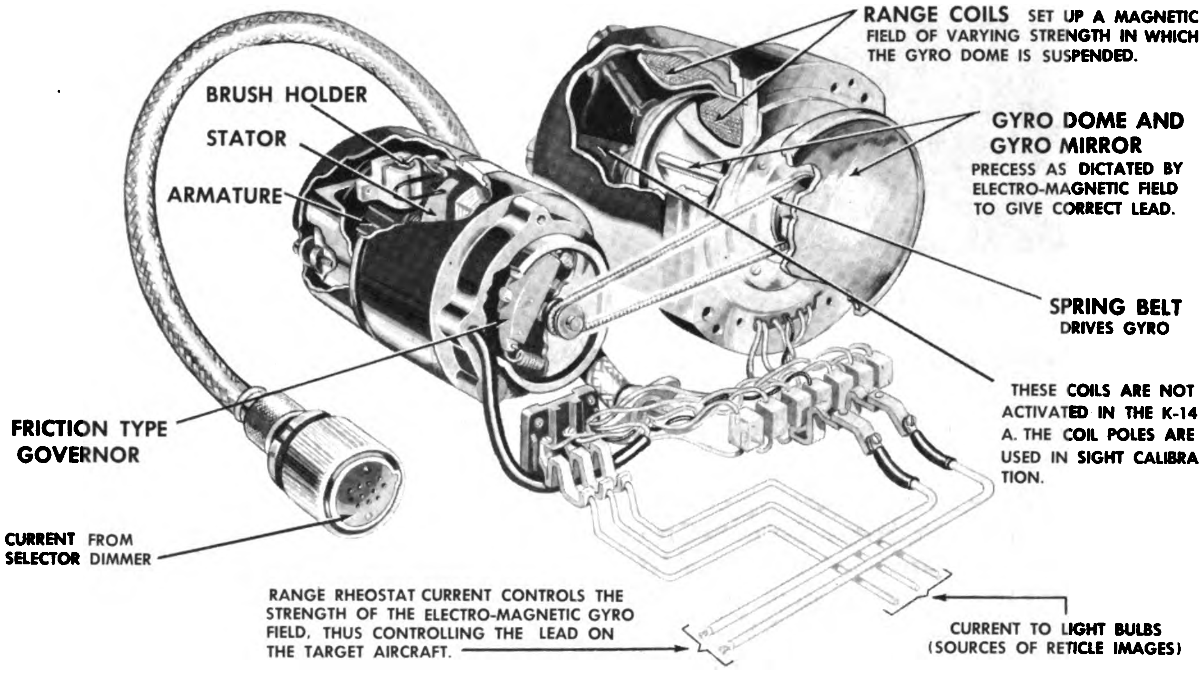

Gyro Function

duce an induced magnetic field which opposes the original magnetic field produced by the range coils. The field produced by the currents flowing in the spinning dome tends to oppose the displacement of the gyroscope axis from center. The position of these magnetic fields, which act as drag forces acting on the dome, is uniform from the center of the dome to the outer edge when the dome is spinning in the center of the magnetic field produced by the range coils. When the aircraft is in straight-and-level flight, the drag forces hold the gyroscope in its neutral position and the movable reticle image remains centered with respect to the fixed reticle image.

There are two main factors which determine the angle by which the gunbore axis leads the sight line. They are the range of the target and the angular tracking rate. Angular tracking rate is proportional to target speed, attacking speed, and velocity.

When the target is framed, the amount of current that flows in the range coils for the particular range determines the strength of the magnetic field produced by the range coils. When the aircraft is turned to follow the target, the gyroscope assembly, including the gyroscope mirror, tends to remain fixed in space while the aircraft and sight housing rotate about the gyroscope. The range coils, which are secured to the sight housing, also shift their position relative to the spinning dome. The forces set up by the magnetic field of the range coils are no longer central with respect to the dome. Therefore, the dome immediately tends to precess toward the new location of the magnetic center where the forces are again equal.

If the aircraft continues to turn, however, drag forces set up in the spinning dome cannot precess the gyroscope assembly to the central position. Consequently, the gyroscope assembly assumes a certain angular position with respect to the flight path of the aircraft. This angular position remains constant as long as the rate of turn of the aircraft and the rate at which the gyroscope is being precessed toward the magnetic center are equal. The angular displacement of the gyroscope mirror relative to the flight path of the aircraft determines the position of the movable reticle image with respect to the central position, and this determines the angle that the gun-bore axis assumes with relation to the line of sight.

Digitized by Google

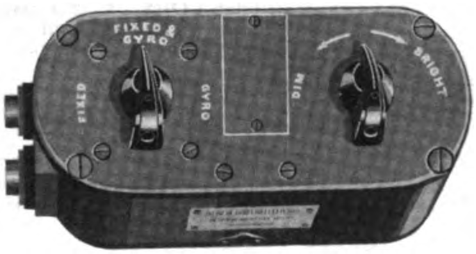

Selector Dimmer

Operating Instructions

The selector-dimmer controls should be set before flight to the position normally used.

Before starting the aircraft engine, place the switches of the sight in operating position, the gun switch at CAMERA AND SIGHT, and the selector switch at FIXED AND GYRO or GYRO. Before landing, place the gun switch at the CAMERA AND SIGHT position. Do not turn the sight off until the aircraft is landed and the engine is turned off. The reason for these procedures is that engine vibration and landing shocks may damage gyroscope pivots if the unit is not operating.

Adapter for K-14 Sight

Although the K-14C-series sight with its adjustable single-plate reflector provides many depressed sight settings for rocket fire, there still exists the need for a depressed sight setting for bombing, leaving the normal bore-sight-setting reticle image undisturbed. A simple method for providing this depressed sighting is to use an additional reflector plate from a discarded sight and construct a variable adapter from duralumin, as shown in the illustration below.

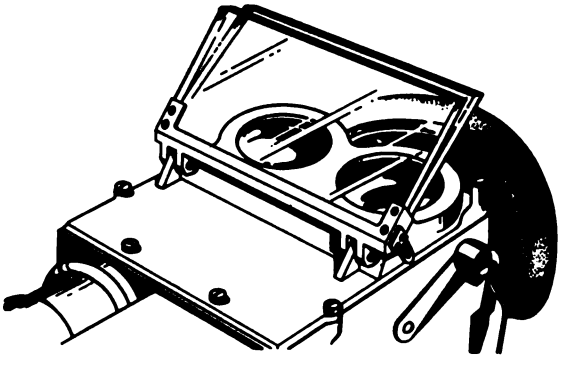

Adapter

After the reflector plate has been carefully inserted into the adapter and bolted securely in place, attach the entire assembly to the gunsight, in the position provided for the sun filter, in the following manner:

1. Fit the female lugs of the adapter over the male lugs on the top forward sight of the sight.
2. Fasten into place with two ¾-inch long bolts.
3. Move the variable reflector plate down into position above the original reflector plate, the elliptical spacer arms of the adapter being allowed to slide over the lower two of the four small threaded holes on the side of the sight head.
4. Lock the spacer arms in place with two of the small screws that were removed in the disassembly of the sun filter.

Flight Tests of Sight

TEST ONE — 70-MIL RETICLE.

1. After the sight has warmed up for a minimum of 15 minutes, set the selector at FIXED AND GYRO, move the fixed reticle mask lever up, and set the range at 2,400 feet (the smallest reticle diameter). The superimposed reticles are shown below.
2. Establish a steady turn at a rate which will deflect the pipper of the moving reticle to the circumference of the fixed reticle ring, that is a 35-mil deflection, as shown in the illustration on the next page.
3. Holding this rate of turn constant, note the time indicated by the second hand of the clock when the directional gyro passes 0°.
4. Maintain a constant rate of turn by

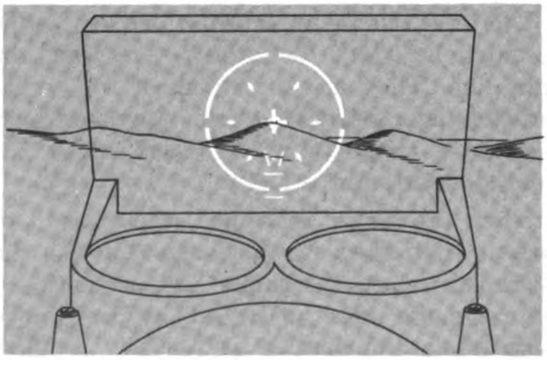

Superimposed Fixed and Computing Reticles keeping the pipper on the ring with a 35-mil deflection for 60 seconds.

5. Note the position of the directional gyro after 60 seconds have elapsed.

6. Repeat the foregoing steps for a turn in the opposite direction.

The correct amount of turn should be 130° plus or minus 10°. If it is not, misalinement of the reticle is probable. If the amount of turn is greater than 140° and a check of the wiring circuits does not reveal any fault, the gyro pivot friction is probably too high and the sight should be turned in to a depot for repair. If the amount of turn is less than 120°, the electrical circuits should be carefully checked to see that the proper resistances are in the range circuit. If no improper resistances are found and the amount of the turn is too small, the sight should be turned in to a depot for repair.

TEST TWO — 70-MIL RETICLE.

1. After the sight was warmed up for a minimum of 15 minutes, set the selector at FIXED AND GYRO, move the fixed reticle mask lever up, and set the range at 1,000 feet.

2. Establish a steady turn at a rate which will deflect the pipper of the moving reticle to the circumference of the fixed reticle ring, that is, a 35-mil deflection.

3. Holding this rate of turn constant, note the time indicated by the second hand of the clock when the pipper passes through some prominent point on the horizon.

4. Maintain a constant rate of turn by keeping the pipper on the ring with a 35-mil deflection until the pipper has again passed through the same point, indicating a 360° turn and check the time at the instant it passes through the point.

5. Repeat the foregoing steps for a turn in the opposite direction.

The correct amount of time to complete the turn should be 60 seconds, plus or minus 5 seconds. If it is not, misalinement of the reticle is probable. If the amount of time required for the turn is less than 55 seconds, the sight is underleading. If the time required is longer than 65 seconds, the sight is overleading. If the amount of time is greater than 65 seconds and a check of the wiring circuits does not reveal any fault, the gyro pivot friction is probably too high and the sight should be turned in to a depot for repair. If the amount of time is less than 55 seconds, the electrical circuits should be carefully checked to see that the proper resistances are in the range circuit. If no improper resistances are found and the amount of time is too small, the sight should be turned in to a depot for repair.

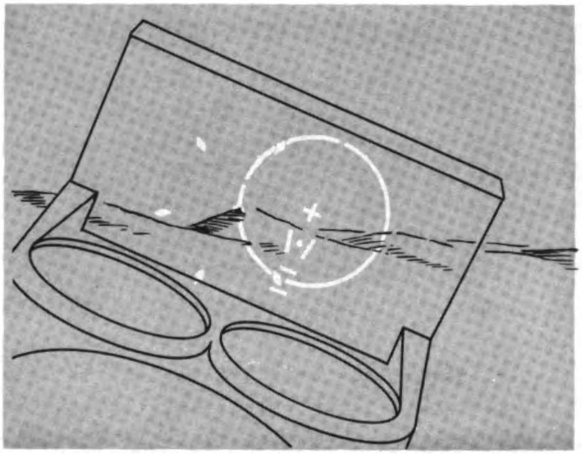

70-Mil Sight Check

TEST THREE — 100-MIL RETICLE.

1. After the sight has warmed up for 15 minutes, set the selector at FIXED AND GYRO, move the fixed reticle mask lever up, and set the range at 1,400 feet.

2. Establish a steady turn at a rate which will deflect the pipper of the moving reticle to the circumference of the ring, that is, a 50-mil deflection. This is shown below.

100-Mil Sight Check

Digitized by Google

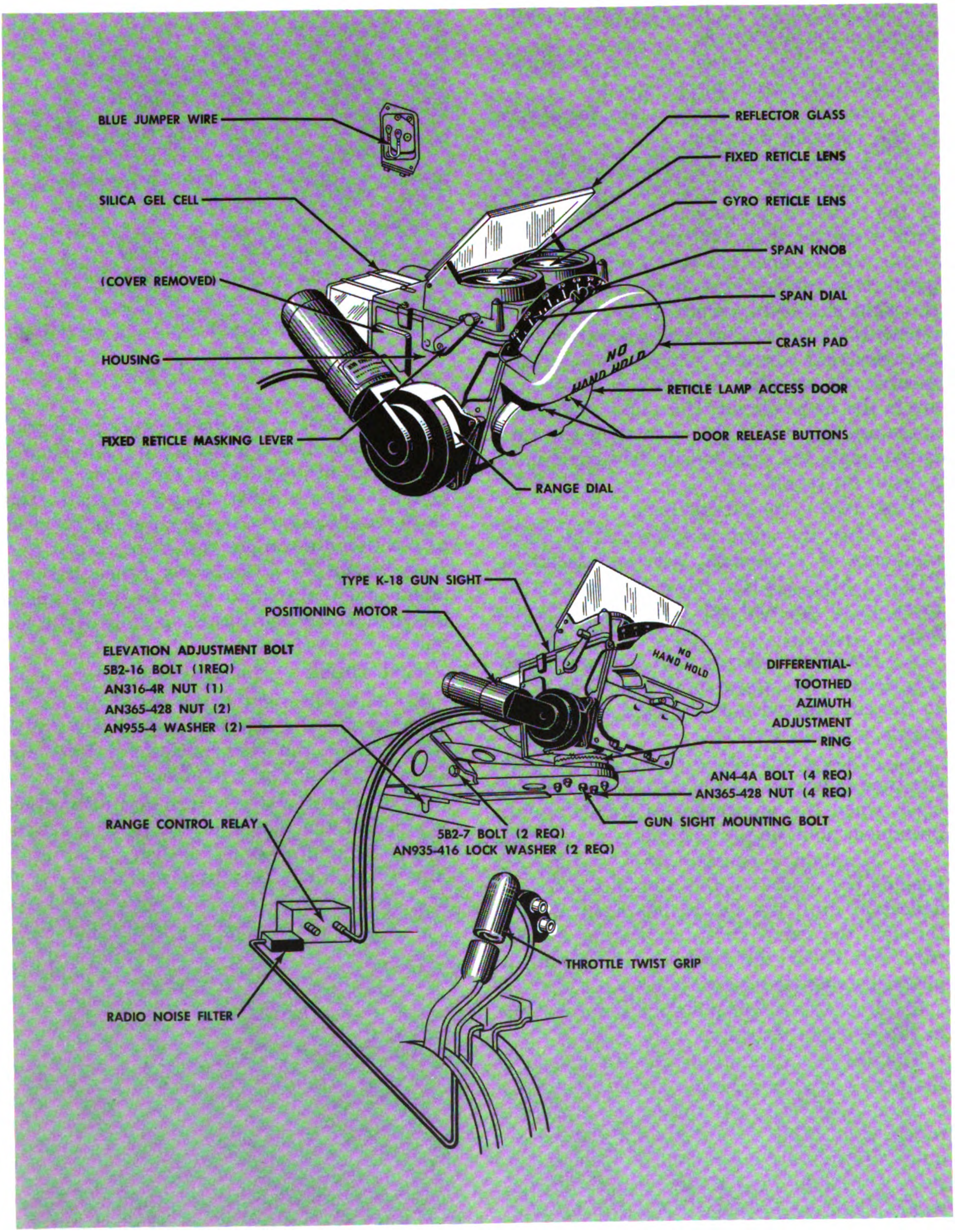

K-18 Sight

Digitized by Google

3. Holding this rate of turn constant, note the time indicated by the second hand of the clock when the pipper passes through some prominent point on the horizon.

4. Maintain a constant rate of turn by keeping the pipper on the ring with a 50-mil deflection until the pipper has again passed through the same point, indicating a 360° turn, and check the time the instant it passes through the point.

5. Repeat the foregoing steps for a turn in the opposite direction.

The correct amount of time should be 60 seconds, plus or munus 5 seconds. If it is not, misalinement of the reticle is probable. If the amount of time required for the turn is less than 55 seconds, the sight is underleading. If the time required is longer than 65 seconds, the sight is overleading. If the amount of time is greater than 65 seconds and a check of the wiring circuits does not reveal any fault, the gyro pivot friction is probably too high and the sight should be turned in to a depot for repair. If the amount of time is less than 55 seconds, the electrical circuits should be carefully checked to see that the proper resistances are in the range circuit. If no improper resistances are found and the amount of timing is too small, the sight should be turned in to a depot for repair.

K-18 SIGHT

The K-18 and K-14 computing sights are similar in construction, operation, and maintenance principles. Their primary differences are in the range-control systems used and the boresighting methods employed. The K-18 uses an actuated electrical range-control system; the K-14 uses a mechanical cable linkage range-control system, which was discussed earlier in this manual.

The actuated electrical range-control system of the K-18 consists of an electrical rheostat in the pilot's right-engine throttle grip, a radio-noise filter, a range-control relay, and a small positioning motor attached to the range drum on the left side of the sight. These devices are shown on the preceding page.

Installing Range Control Positioning Motor

1. Remove stud.

2. Insert pin in sheave slot, then adjust sheave so pin is 45° aft from vertical when range dial is on "8."

3. Make sure motor is set at corresponding full travel (twist grip turned counterclockwise). Then position motor over ranging dial. See that pin on sheave is engaged in motor drive slot.

4. Secure positioning motor to gun sight with four screws, and safety.

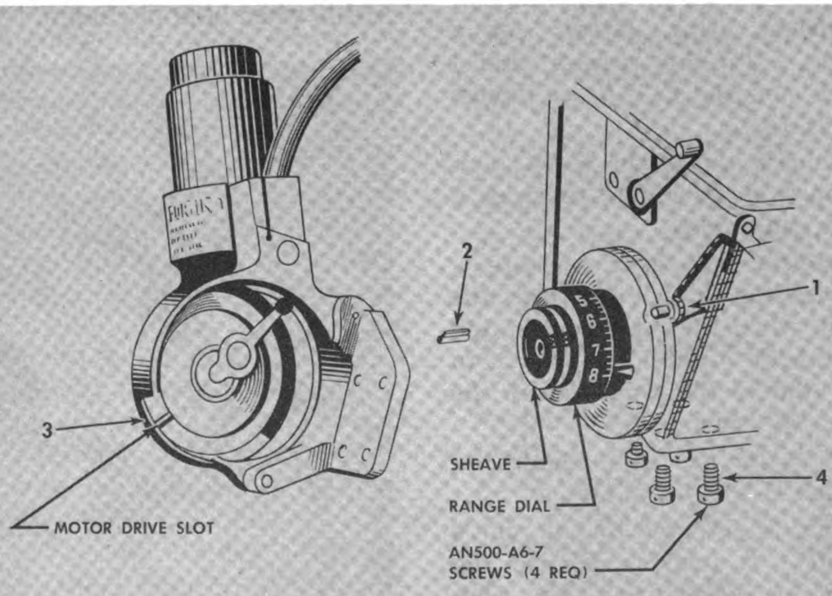

Range Control Positioning Motor

Digitized by Google

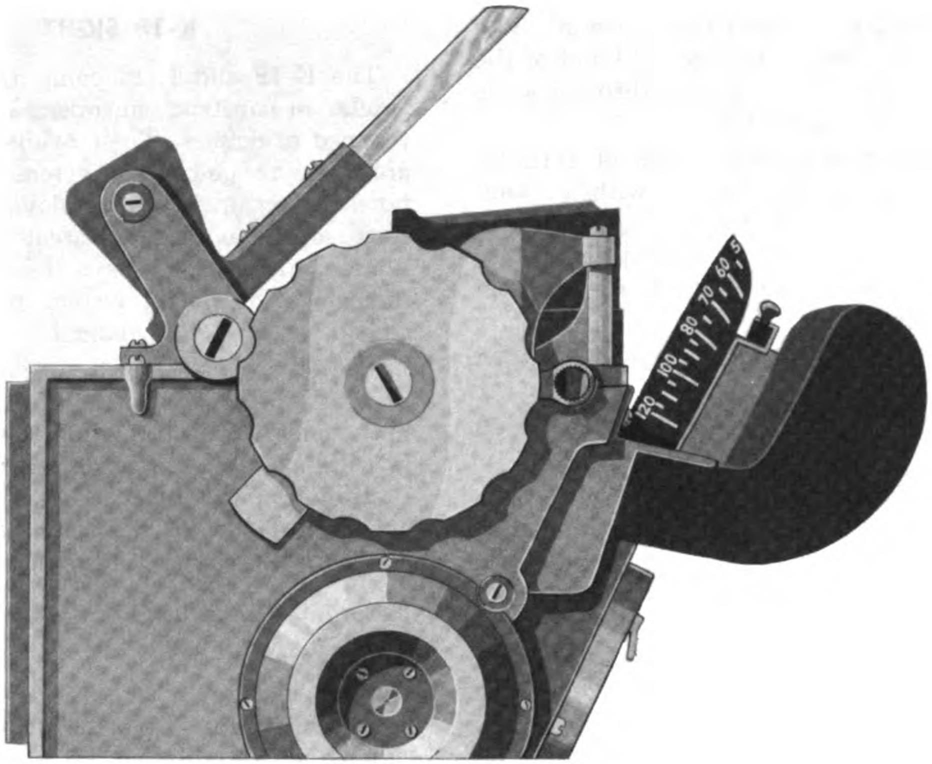

K-14C Sight

K-14C AND K-18A SIGHTS

The K-14C and K-18A sights shown on this page are modifications of the K-14 and K-18 sights. They are designed to provide variable settings of the line of sight in the vertical plane and an additional control of the gyro field current to permit accurate sighting for air-to-ground rocket firing. Except for a variable reflector, a 267-ohm resistor, and a relay, the K-14C and the K-18A are almost identical to the K-14.

The *selector-dimmer unit* of the K-14C contains, in addition to its four fixed resistors, a 267-ohm resistor and a relay.

In addition to the four fixed resistors, a 267-ohm fixed resistor is switched into the *range coil circuit,* when the relay is operated by the pilot's throttle pushbutton switch, to decrease the current to the range coil in the sight head for rocket firing.

The *ON-OFF switch* has been eliminated from the K-14 and K-14C installations.

The *relay,* which is actuated by the pilot's pushbutton switch, is used to change the range coil circuit for rocket firing. The relay employed in the K-18A sight includes additional contacts, normally closed, which open the azimuth coil circuit when the pilot's throttle pushbutton switch is closed.

Operation

The K-14C and K-18A sights are identical in operation to the K-14 and K-18 computing sights when used in gunfire.

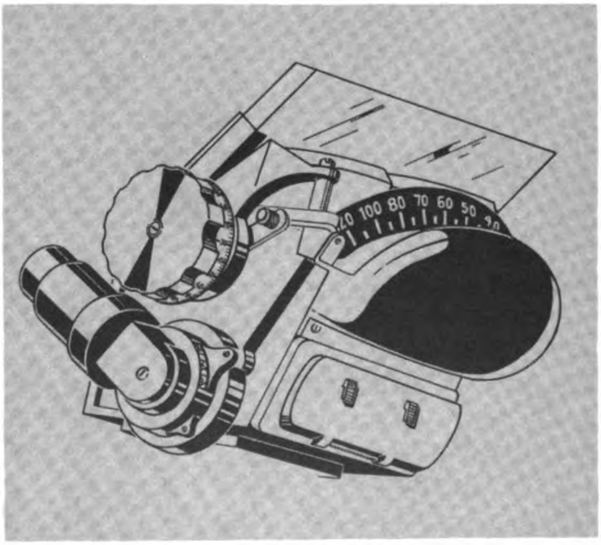

K-18A Sight

Digitized by Google

The variable reflector assembly which was added to the sight head, together with a relay and resistor installed in the selector-dimmer box, adapts this equipment for accurate air-to-ground rocket firing.

The fixed reticle is the same as in the K-14 sight. It is provided for harmonizing and maintenance checks but can also be used as a standby if circumstances require its use.

The controls operated by the pilot when firing rockets are the variable reflector dial and a pushbutton switch on the throttle grip. The selector-dimmer, span-setting knob, and twist grip are used when the sight is operated as a gunsight. In this case the variable reflector dial must be set to zero.

For all normal conditions, the fixed reticle should be blanked out by turning the selector-dimmer switch to GYRO.

GENERAL INFORMATION ON RADAR SYSTEMS

Radar is a modification of radio but operates on a much shorter wavelength than ordinary shortwave radio sets. It was developed during World War II to detect and locate distant objects under conditions of poor visibility with very high precision. The word RADAR was coined from the words "radio detection and ranging," and, as the name suggests, radar can measure the range to objects it detects.

The radar systems in use on fighter aircraft equipped with computing sights are of two types: *range-only* radar systems that supply only range information, and *search-and-track* radar systems that supply information on both the range and position of the target. Range-only radar systems are used in fighter aircraft that normally engage in daylight missions under conditions of good visibility. Under these conditions the pilot searches for targets visually and tracks them with a reticle image. A search-and-track radar system is one of the major components of an interceptor fire control system. Fighter aircraft that are used under conditions of poor visibility, including night missions, rely almost completely on search-and-track radar systems. Since he cannot see his targets directly, the pilot must detect and track them from a radar display oscilloscope.

The range-only radar system in present use with the A/1-series gun-bomb-rocket sights is the AN/APG-30.

Functional Components

The major functional components in a radar system are the timer, transmitter, antenna, receiver, range unit, and indicator.

The *timer*, sometimes known as the synchronizer, the keyer, or the control central, supplies signals that measure the interval between the pulse and the echo.

The *transmitter* generates the radar pulses and sends them to the antenna.

The *antenna* takes the radar pulses from the transmitter and radiates them in a highly directional beam. In the periods of silence between pulses, the antenna detects reflected echo pulses and passes them on to the receiver.

The electrical characteristics and physical appearance of radar antenna systems vary. The size of the antenna depends on the frequency of the radiation used for radar pulses and the type of antenna installation. The actual design depends upon the efficiency and accuracy required.

The *receiver* receives weak radar pulses reflected from the target, amplifies them, and sends them to the range unit.

The *range unit* compares the original pulse with the echo, determines the time interval between the two, and converts this information into a range signal that can be used by the automatic computing sight.

The *indicator* produces a visual representation of the echo pulses.

An actual radar system may contain several functional components within one physical component, or a single function may be performed in several physical components. However, the arrangement of components does not alter the operating principles of the set.

Principles of Operation

Radar pulses are transmitted in short, very intense bursts or pulses of energy with a relatively long interval between pulses. These pulses leave the radar antenna in a tight beam. The purpose of the highly directional beam is to permit a target to be located accurately and to distinguish between targets that are close together.

Digitized by Google

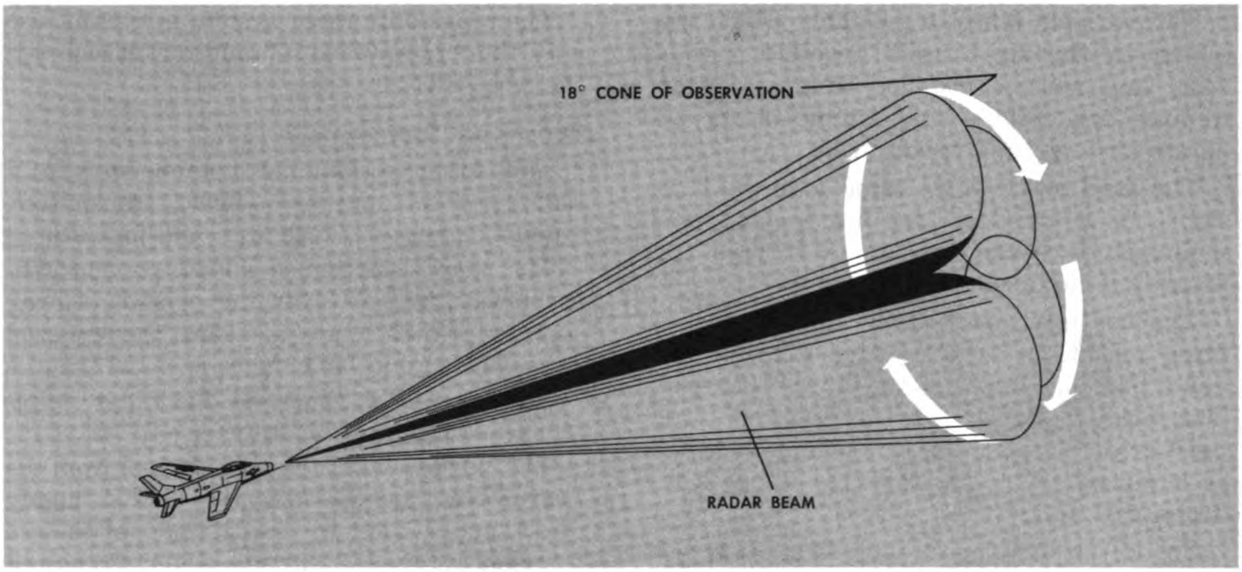

Cone of Observation

To make the radar antenna respond to targets in an area larger than that covered by the radar beam, the radar antenna has a feature called conical scan. The radar antenna dish spins at a rate depending on the particular antenna design. The radiating-receiving element of the antenna is so designed that the source of radiation is slightly off center. As the dish rotates and produces the conical scan, the radar beam swings out a cone in space, as shown in the illustration above. This cone is called the cone of observation.

In range-only radar systems, the antenna assembly is usually mounted in a fixed position, in the direction of the gun line.

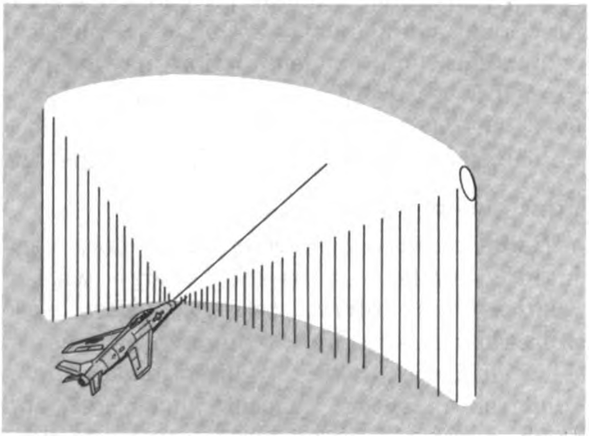

Search Area of a Search-and-Track Radar

In search-and-track radar systems the area that the radar system can search is made larger than the cone of observation by having the antenna assembly so mounted that it can turn away from the gun line. During search, the antenna assembly turns through a fixed pattern, searching for targets through a large, rectangular, solid angle in front of the aircraft, as shown below.

The antenna completes its search pattern 10 to 20 times a minute. When the radar has locked on a target, the movable antenna allows the search-and-track radar to track the target. The antenna turns until the target lies on the centerline of the cone of observation. It is possible to use the conical scan feature of the radiating-receiving element to locate targets very accurately.

A small fraction of the energy in a radar pulse sent out by the antenna will strike a target within the radar field of scan and return as an echo to the radar receiver. During the interval between pulses, when the antenna is not radiating, the radar system can detect echoes from the last pulse sent out. The interval between the time a pulse is transmitted and the time its echo is received is a direct measure of the range to the target because:

a. The pulse travels from the antenna to the target and back again.

Digitized by Google

b. Radar waves, like light waves, travel in straight lines at the speed of light.

c. The speed of light is a constant that has been measured very accurately. The measurement of range can therefore be reduced to the measurement of time, and time can be measured more precisely than any other basic quantity.

The radar system measures the time interval between a transmitted pulse and its echo by comparing the echo pulse with a reference pulse generated at the same time as the transmitted pulse.

K-19 SIGHT

The K-19 sight is a single-gyro, computing gunsight that computes lead angle and gravity drop for fixed gun fighter aircraft flying lead pursuit courses. This sight is a repackaged version of the Navy Mk. 20 antiaircraft director. The sight and the equipment used with it are shown in the illustrations below.

Like the K-14A, the K-19 sight computes the lead angle by means of a single gyro mounted in the sight head and acted upon by eddy currents. Improved accuracy at longer

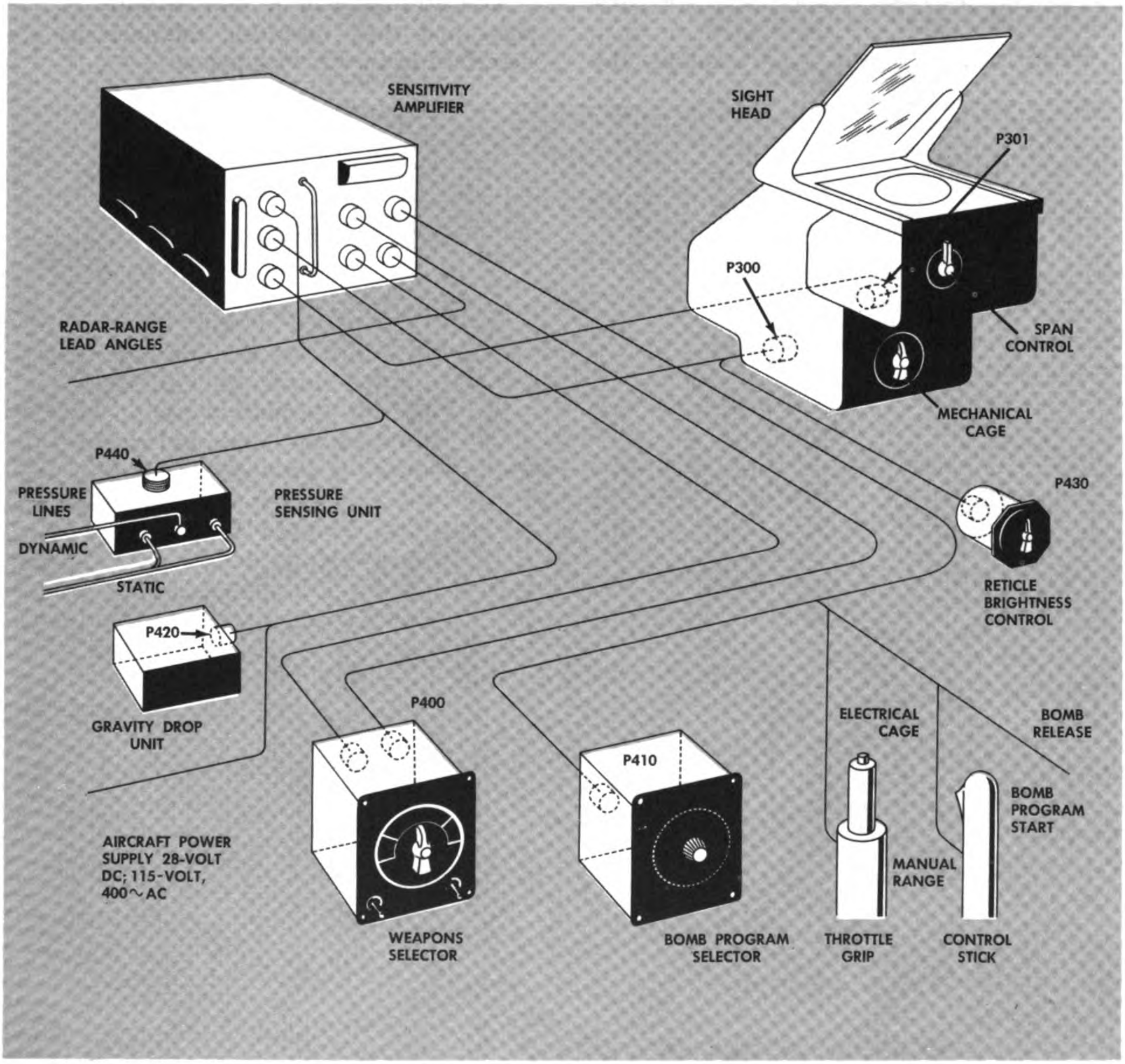

Schematic of K-19 Sight and Equipment

Digitized by Google

ranges has been achieved by adding an accelerometer for introducing gravity drop corrections, and by other design features.

The sight accepts either manual or radar range voltage inputs and transmits lead angle outputs electrically. It is equipped with a projection optical system employing a variable diameter reticle adjustable for use in manual ranging.

The tracking index and manual ranging systems of the K-19 sight are similar to those in the K-14A. The K-19 can be electrically caged during search for a target. It can also be mechanically caged and used as a fixed sight.

When used in gunfire and rocketfire, the sight has a maximum accuracy range of 2,250 to 250 yards. The optical lead limits are plus or minus 9° in azimuth, and minus 15° to plus 3° in elevation. The sight can be operated to an altitude of 60,000 feet without pressurization.

The K-19 is a disturbed reticle computing sight in which a single electrically driven gyroscope is the principal computing element. It is designed for installation in aircraft with fixed forward firing weapons and may be used for air-to-air and air-to-ground gunnery and rocketry and for air-to-ground bombing.

The arrangement of various parts of the sight and their operating relationships are described in the drawing below.

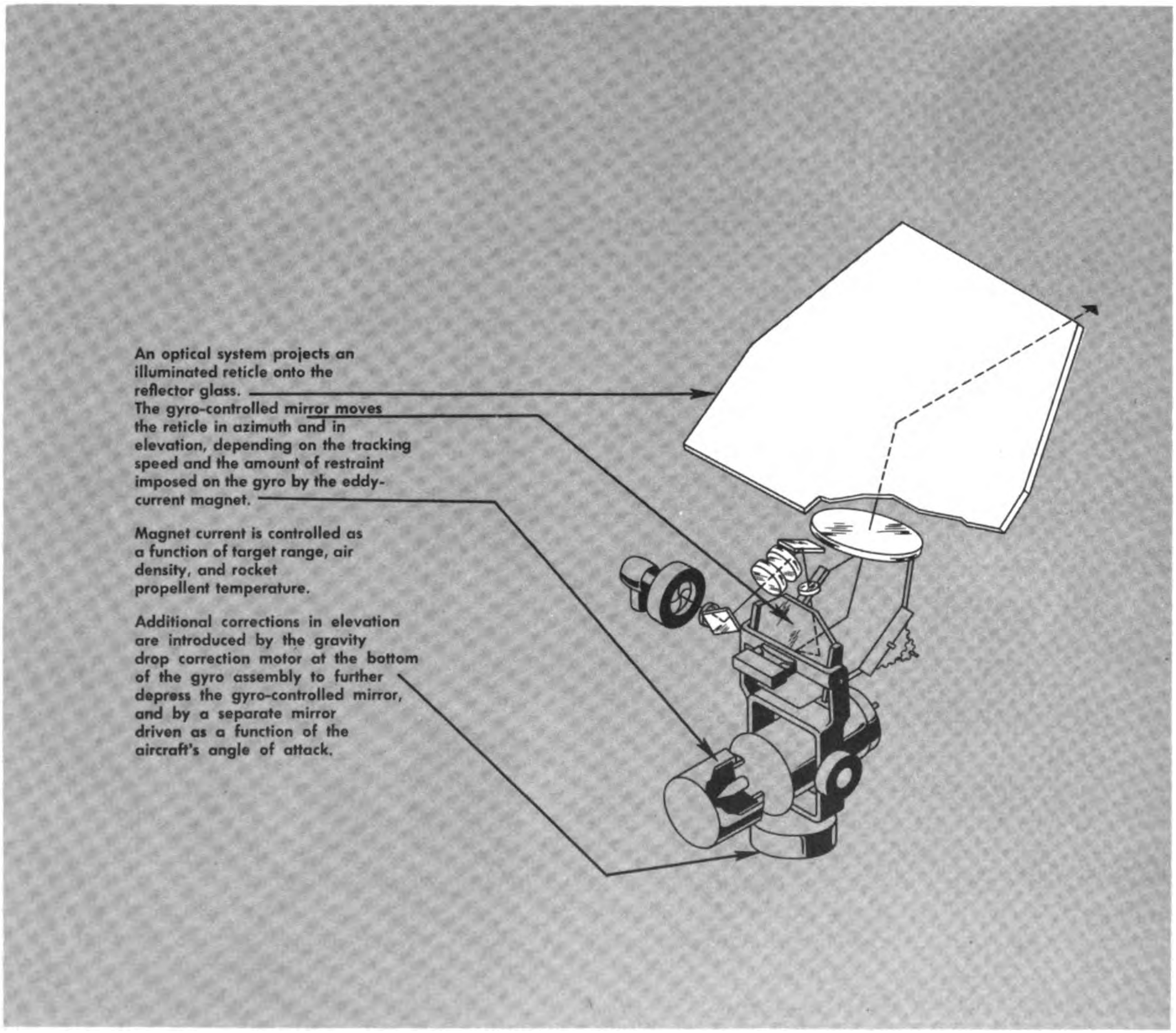

An optical system projects an illuminated reticle onto the reflector glass.

The gyro-controlled mirror moves the reticle in azimuth and in elevation, depending on the tracking speed and the amount of restraint imposed on the gyro by the eddy-current magnet.

Magnet current is controlled as a function of target range, air density, and rocket propellent temperature.

Additional corrections in elevation are introduced by the gravity drop correction motor at the bottom of the gyro assembly to further depress the gyro-controlled mirror, and by a separate mirror driven as a function of the aircraft's angle of attack.

K-19 Sight

Digitized by Google

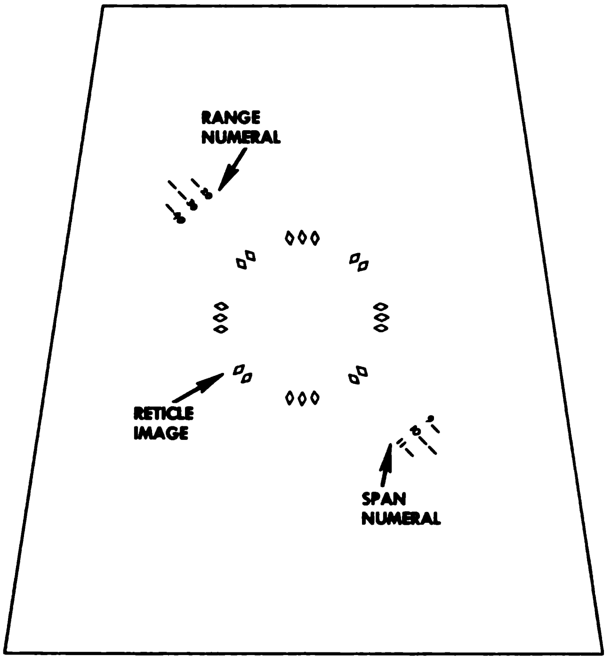

Reticle Display on Combining Glass

Gravity Drop Unit

Sight Head

The sight head is mounted in the cockpit, forward of the instrument panel. Its location is such as not to obstruct the pilot's line of vision over the nose of the aircraft. It contains the lead angle computing gyroscope and eddy current precessing system, a direct-coupled optical system of 3½-inch aperture, range servo drive, a gyro precession torque motor to introduce gravity drop correction, a mechanical caging mechanism, a variable diameter ranging reticle, range-driven potentiometers of the sensitivity computing network, and lead angle pickoffs.

When the sight is in operation and the pilot looks through the combining glass, he sees the reticle image as shown in the illustration above. He tracks a target by holding the center pip on the target. In the upper left is visible the numeral indicating either the manual or radar range information received by the sight. The numeral in the lower right shows in feet the span setting of the reticle when it is used for manual ranging. An in-range indicator covers this numeral when the range information received by the sight indicated that the target is too far away.

Sensitivity Amplifier Assembly

The sensitivity amplifier assembly contains a power supply for the sight, a magnet current supply for the eddy current precessing magnet, the range servo amplifier, a precession amplifier to control the gyro torque motor, a bomb program timing motor and cam, and many of the components of the magnet current and precession current computing networks. Since the sensitivity amplifier assembly also functions as a junction box for the entire system, its location in the aircraft should be such as to keep the length of necessary interconnecting cabling at a minimum.

Gravity Drop Unit

The gravity drop unit should be located at a point in the fuselage of the aircraft near the center of gravity and should be mounted in a normally horizontal plane, preferably with the axis of the unit alined fore and aft. Two sub-units, the accelerometer unit and the torque response unit, comprise the gravity drop unit. The unit is shown in the illustration above.

The accelerometer unit consists of a weight mounted on an arm extending horizontally

Digitized by Google

Pressure Sensing Unit

from the shaft of a torque motor. Mounted at the end of the torque motor shaft is an alternating current (AC) pickoff. Accelerations of gravity and centrifugal force acting on the weight produce slight rotational movements of the motor shaft driving the pickoff. The precession amplifier amplifies the pickoff signal, and a portion of the amplified signal is applied to the torque motor control winding to produce a torque which balances the torque applied by the weight. The amplifier output is applied to the gyro precession torque motor which precesses the gyro in elevation, applying a gravity drop correction for all modes of operation except bombing.

The components of the torque response unit are essentially the same as those in the accelerometer. On the torque response unit, however, a spring replaces the pendulous weight. The torque produced by this spring displaces the pickoff to produce a signal, a portion of which, when amplified in the precession amplifier, is applied to the torque motor to balance the torque of the spring. This voltage, applied to the gyro precession torque motor, precesses the gyro downward in elevation. The torque response unit is used in bombing operation only.

Pressure Sensing Unit

The pressure sensing unit contains static and dynamic pressure sensing units and should be located close to static and dynamic pressure lines. These sensing units are pressure actuated to drive potentiometers which indicate air density, indicated airspeed, and true airspeed.

Weapon Selector

The weapon selector may be located at any point in the cockpit convenient to the pilot. It is a five-position rotary selector switch with six decks and twelve switching sections used to make the connections with the computing networks, the gravity drop unit, and the sensing unit necessary for the desired mode of operation of the sight.

Weapon Selector

Digitized by Google

Reticle Brightness Control

A 75-ohm nonlinear rheostat is used to control the brightness of the filaments in the reticle lamp which, in turn, controls the brightness of the reticle. Rotating the control clockwise from the OFF position lights and increases the brightness of one of the two reticle lamp filaments; rotating the control counterclockwise controls the brightness of the other filament. The reticle brightness control may be mounted in any convenient position in the cockpit.

Bomb Program Selector

The bomb program selector units for serial No. Y-2W, Y-3F, and Y-3W consist of four ganged rheostats manually driven by means of a gear train. (In serial No. Y-1F, Y-1W, and Y-2F, these rheostats are nonlinear and are directly driven.) These rheostats are part of the sensitivity computing network for bombing. They are set by the pilot as a function of true airspeed and range. The unit may be mounted in the cockpit in any convenient location.

Manual Ranging Control

The manual range control, a 10,000-ohm potentiometer, is most conveniently located on the throttle grip. It is used by the pilot, in the absence of a radar range signal, to adjust the diameter of the sight reticle to span the fuselage or wingspan of the target, thereby setting the range potentiometers to the range of the target.

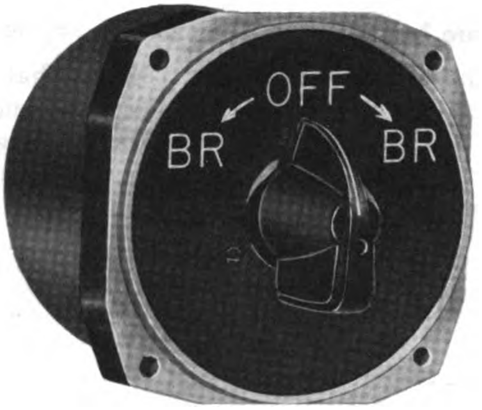

Reticle Brightness Control

Bomb Start Switch

The bomb start switch may be mounted on the control stick. Its function is to start the bomb program timing motor on its 6-second cycle. At the end of 5 seconds, a circuit is closed permitting bombs to be released.

Preparation for Flight

FOR AMPLIFIER SERIAL NO. Y-2F, Y-3F, Y-2W, Y-3W. When guns are to be fired, place S52, the .50 cal-20-mm gun switch, and S50, and the tow target (training) gunnery switch, in the desired positions. When rockets are to be fired air-to-ground, check that S51, the ground ranging radar switch, is in the correct position.

FOR ALL UNITS. When rockets are to be fired, adjust potentiometers R64, R68, and R75 to the propellent temperature predicted at time of firing.

Bomb Program Selector

Digitized by Google

Before Takeoff Gyroscope Check

Check before takeoff to insure that the gyroscope in the sight head is mechanically caged. Caging is accomplished by rotating the gyro cage knob on the sight in a clockwise direction.

CAUTION

To avoid damage, the gyroscope should be mechanically caged at all times when not running, and throughout the starting operation.

Starting

1. Turn on the gunsight power switch, applying AC power to the sighting system. (Thermostatically controlled heaters in the sight head are connected to the aircraft's 28-volt direct current [DC] supply.)

2. After a wait of about 1 minute to allow the sensitivity amplifier to warm up and to allow the gyroscope to come up to speed, uncage the gyroscope.

NOTE: When the ambient temperature around the sight head is between −20° C. (−4° F.) and −54° C. (−65° F.), a warmup period varying from 1 minute at −20° C. to 8 minutes at −54° C. is necessary prior to uncaging the sight gyroscope. After warmup, watch that the reticle holds steady when the gyroscope is uncaged. If the reticle oscillates, recage the gyroscope and allow additional warmup time.

3. Rotate the knob on the reticle brightness control to left or to right, to adjust the brightness of the reticle image.

NOTE: There are two filaments in the reticle lamp, one of which lights when the brightness control is rotated to the left, the other when the control is rotated to the right from the OFF position. If one filament burns out during flight, set the brightness control to use the alternate filament.

Use in Gunnery

1. Place the weapon selector switch on GUNS.

2. For manual ranging, set the reticle span control for the span of the target. (The numerals indicating the span setting appear on the reticle outside the ranging circle.) Press the electrical caging button on the throttle grip control while turning into position for a pass at the target on completion of the turn, release the button. Track the target by holding the reticle centered on the target and adjust the reticle size by rotating the throttle grip control.

3. For radar ranging, press the electrical caging button on the throttle grip control while turning into position for a pass at the target. On completion of the turn, release the button. Track the target by holding the reticle centered on the target. Check that the radar set has locked on the target, giving automatic range data to the sight.

4. Fire the guns at any time the range to the target is less than 1,500 yards.

Use in Air-to-Air Rocketry

1. Place the weapon selector switch on ROCKETS, AIR, 2.75.

2. For manual ranging, use the same procedure as for gunnery.

3. For radar ranging, use the same procedure as for gunnery.

4. When the range to the target is less than 1,500 yards, rockets may be released to hit the target.

Use in Air-to-Ground Rocketry

1. Place the weapon selector switch on ROCKETS, GROUND, 2.75 or on ROCKETS, GROUND, 5.0, 2.25 depending on the type of rockets to be fired. If 5.0-inch or 2.25-inch rockets are to be fired, place S402 (on the weapon selector) in the "5.0" or the "2.25" position as required.

2. For manual ranging, select the preset range at which rockets will be released by means of the long-short switch on the weapon selector. (In the LONG position, rockets must be released at an estimated 1,200-yard range; in the SHORT position, at an estimated 600-yard range.) Depress the electrical caging switch while turning toward the target. When sight is alined with the target, release the electrical caging switch. Hold the reticle centered on the target and when at the correct range, release rockets.

3. For radar ranging, depress the electrical caging switch while turning toward the target On completion of the turn, release the button. Hold the reticle centered on the target. Radar should now lock on the target, providing automatic range data to the sight. Fire rockets at a range of less than 1,500 yards.

Digitized by Google

Use in Bombing

1. Place the weapon selector switch in the BOMBS position.

2. Set the bomb program selector so that the estimated range of the target at start of the bomb run is opposite the expected airspeed on the bomb run.

3. Press the electrical caging button while turning into the bomb run; release button when alined with target.

4. When at the predetermined estimated range for the run, press the bomb start button on the aircraft control stick to start the bomb program timing cycle.

NOTE: Hold the bomb start button depressed for at least 1 second.

5. During the bomb timing cycle, fly the aircraft to keep the reticle centered on the target. At the end of 5 seconds, contacts in the bomb timing unit will close allowing bombs to be released automatically.

NOTE: For specific aircraft installations, refer to the applicable instruction manual.

Use as a Fixed Sight

To used as a fixed sight in any function, operate the sight with the gyroscope mechanically caged. This alines the line of sight with the armament datum line. Leads must now be estimated as with any fixed sight.

After Use

1. Mechanically cage the gyroscope.
2. Turn off the gunsight power switches.

GENERAL INFORMATION ON A-SERIES SIGHTS

The A-series gun-bomb-rocket sights were developed for use in fighter aircraft only, as opposed to the K-series, which could be used in both flexible gunnery and fixed gunnery. The design of the A-type sights incorporates both radar and manual ranging with automatic gunfire prediction, rocketfire prediction, and bomb release computations. The sights extend the range of the fighter's effectiveness by including automatic calculations not only for target motion and trajectory shift, but also for gravity drop, and air density. These elements comprise the *total prediction angle* supplied by the sight. This angle is shown in the illustration below.

The series consists primarily of the A-1 and the A-4 gunsights. The following discussion will deal mostly with the A-4 sight. The A-4 sight is merely a "dressed-up" version of the A-1. The A-4 is a later model that works a little more smoothly and is improved from the maintenance standpoint. The operation and basic principles of the two are almost identical.

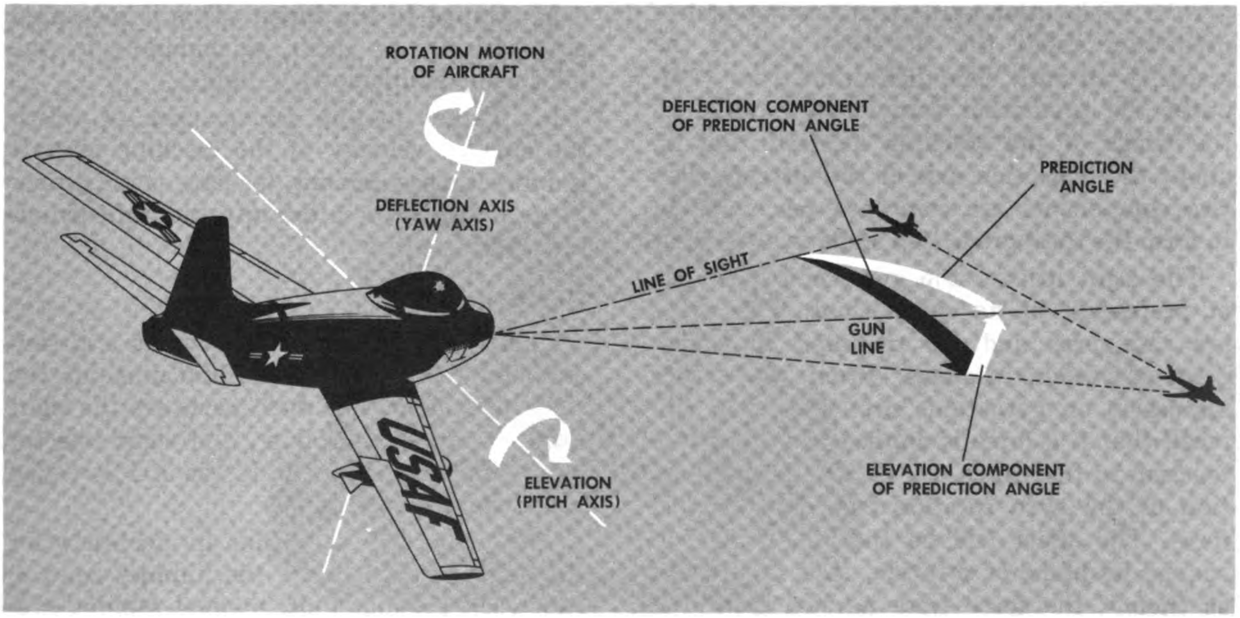

Total Prediction Angle

Digitized by Google

The range of the sights is from 600 to 6,000 feet. They will compute the proper prediction angle for a target over that range from the ground up to 50,000 feet if the pilot can track the target properly. Correct prediction will be computed from a 0 *g* force to 9 positive *g*'s. It is improbable that a pilot would be able to deliver a lethal burst of fire much beyond 3,000-foot range because of bullet dispersion and the difficulty in tracking beyond that range. The sight will, therefore, actually compute for conditions which are beyond the present capabilities of the other gunnery equipment in the aircraft.

The sights may be used in five different ways:

a. In the gunfire function with automatic radar ranging against aerial targets.

b. In the gunfire function with manual ranging against aerial targets.

c. As an air-to-ground automatic computing gunfire and rocket fire sight.

d. As an automatic computing bomb sight.

e. In the event that all of its automatic functions fail, it may be used as a fixed optical sight in its manually caged position.

Principles of Operation

The A-series sight is a two gyro gunsight, consisting of an elevation gyro and a deflection gyro. The elevation gyro gives a component of prediction about the elevation axis of the tracking aircraft. The deflection gyro computes the prediction component parallel to the wings of the tracking aircraft, that is, about the deflection axis of the aircraft. The two components are combined mechanically to form the total prediction angle requirement.

The sight utilizes the gyroscopic principle of precession in its calculations. The gyros are rate-gyros and are mounted in single-plane-of-freedom gimbals. From the earlier discussion on gyroscopic principles, you will recall that if a force is applied to a gyro, the reaction to that force will be 90° in the direction of the gyro rotation from the original force. The effect will be that the gyro will change its plane of rotation, that is, precess, as though the force were applied from the latter position.

The turning motion of the aircraft during tracking exerts the original force on the gyros, causing them to precess in accordance with the principle stated above. The turning motion of the aircraft is a measurement of the target motion. The amount the gyro precesses in response to a given force (a given rate of turn of the aircraft) can be measured and calibrated for use in calculating a prediction angle.

The range is obtained automatically by a radar unit. This information is transmitted to the sight to exert restraint upon the gyro, making it a rate-of-turn-measuring gyro. The amount that the gyro precesses, in response to aircraft turning rate, is modified by the range input. The range information arrives within the computer as an electrical current that is inversely proportional to the range. The longer the range to the target, the smaller is the current sent to the computer; consequently, the less the restraint upon the gyro movement. The electrical range current can be thought of as a stiffness current, since it results in a stiffness being applied to the freedom of action of the gyros. Long ranges produce low stiffness upon the gyro movement. Short ranges produce high stiffness upon the gyro movement.

Therefore, in common with all computing sights, the A-series sights compute a prediction angle upon the basis of two main inputs:

a. Range to the target. This is measured automatically by radar, or manually by the pilot using stadiametric ranging.

b. Target motion information, of which the angular velocity of the tracking aircraft is a direct measurement, (as long as the proper range information is fed into the sight simultaneously).

Components

There are four main components and several supporting components that make up the sighting system. The main parts are the sight head, computer, amplifier, and sight selector unit (similar component in the A-1 is called the rocket selector unit).

The supporting units that are necessary for the sight to operate are the dimmer control, range servo, radar unit, manual ranging system, and power supply.

Digitized by Google

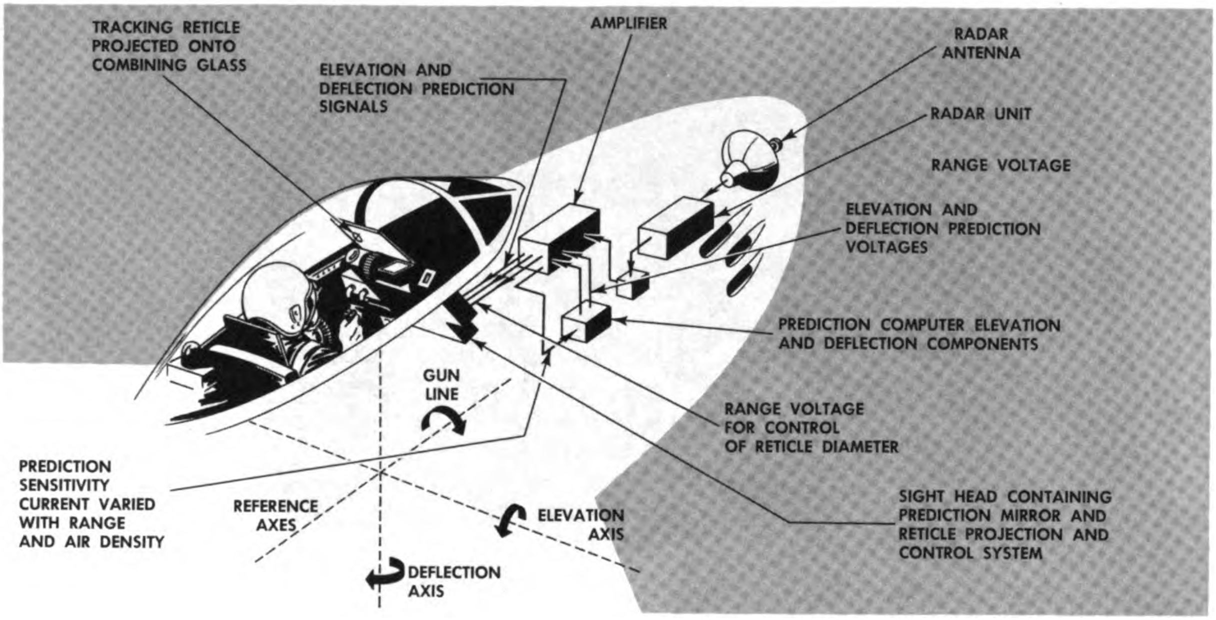

Typical Sight Installation

Above is a diagram of a few of the various components of the sight system as they appear in a typical installation within an aircraft.

For all practical purposes, the four main components of the A-1 sight may be considered as one unit. They are calibrated together. Minor repairs within each unit may be accomplished in the field. However, if a complete major unit must be replaced, then all of them must be removed and returned to the depot for correction and recalibration of a complete new set. In the A-4, excellent changes were made from the maintenance standpoint. The separate components of the A-4 are calibrated individually. This greatly facilitates maintenance, since complete system changes are unnecessary.

The following discussion of the various components of the system is designed to give you a general understanding of the overall workings of the sight system. Each component is covered more thoroughly in the next section.

The *computer* is the unit that houses the computing portions of the sight. It contains three main assemblies: the elevation gyro assembly, deflection gyro assembly, and bomb computing assembly. The elevation and deflection gyro assemblies contain all the ele-

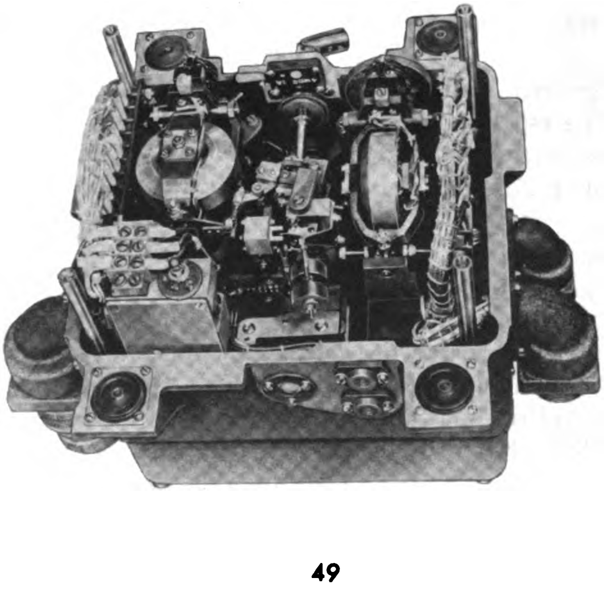

Computer

Digitized by Google

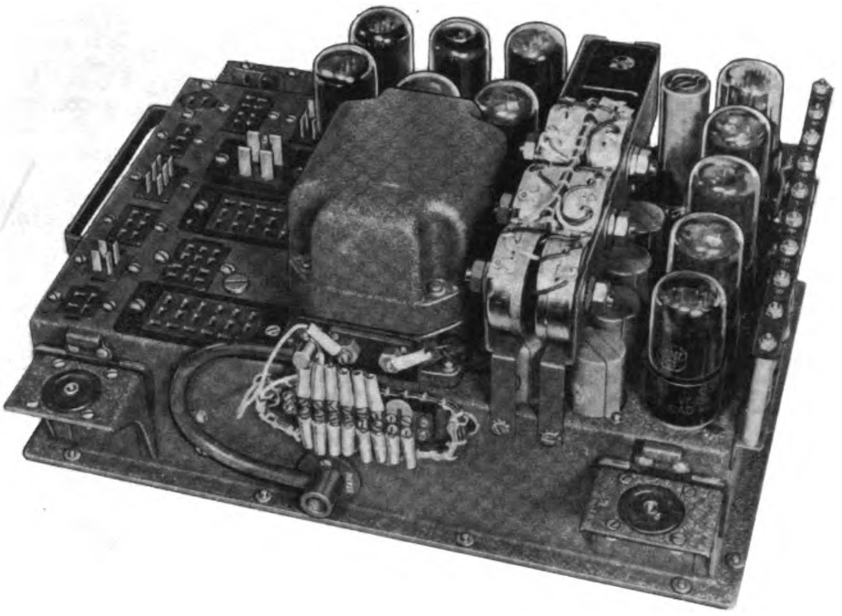

Amplifier, Type A-1

ments of the computer for calculating the prediction angle requirements for both gunfire and rocketfire. The bomb computing assembly comes into play whenever the bomb function is engaged. It computes the automatic release point for bombs.

The *sight head* contains the essential units for presenting the prediction data calculated by the computer to the pilot. It contains:

a. An optical system for collimating the light rays of the reticle picture.

b. The reticle system and the components that vary the reticle size during the ranging.

c. The range dial positioning mechanism which presents the range information to the pilot.

d. A variable position mirror called the prediction mirror. It reflects the reticle picture to the reflector plate presenting to the pilot the sight picture of the prediction angle generated by the computer.

The *amplifier* does just what its name implies. It receives weak signals from various sources throughout the system, and amplifies the signals into a proper magnitude for use elsewhere within the sight. Actually there are four separate amplifiers within this unit. They are called amplifier channels. Each has a particular signal to amplify.

a. The deflection channel amplifies signals from the deflection gyro assembly in the computer. It passes the amplified information on to the prediction mirror within the sight head.

b. The elevation channel amplifies signals received from the elevation gyro assembly and passes it on to the prediction mirror.

c. The range channel amplifies range signals sent into the sight from the range servo. It passes that information on to the sight head where it positions the range dial and varies reticle size.

d. The sensitivity channel also amplifies range information received from the range servo, but it passes that data to the gyro assemblies of the computer. It is this signal that is used in the actual computing of the prediction angle. This signal modifies the action of the gyros for range.

NOTE: The amplifier also contains the air density unit, the electrical cage relay, and five dive bomb relays that will be discussed later.

Range information is supplied either by the radar range unit or by the manual ranging system. These units initially measure the range to the target, and send the information to the range servo to be distributed throughout the sight. All range information must

Digitized by Google

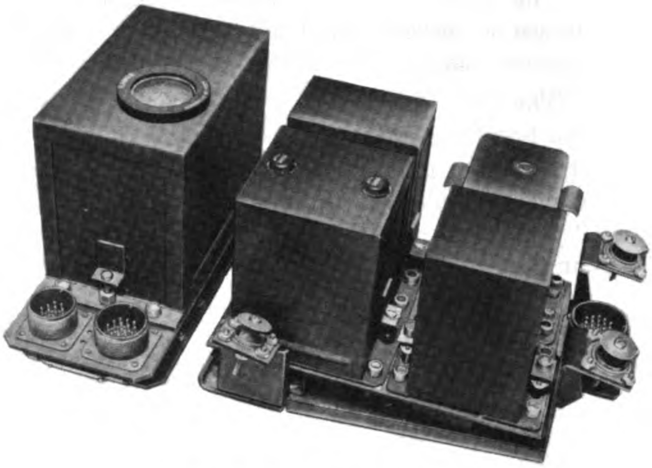

Range Servo, Type A-4

first pass through the range servo before going into the computing system of the sight. The operation of the radar unit will be discussed in more detail later in the section.

The *range servo* receives the range information from the radar or the manual ranging system. It processes the range signal into an electrical current of the proper type and magnitude, and sends it into the sight. It distributes range information to channels within the amplifier, (the range channel, and the sensitivity channel).

The *sight selector unit* in the A-4 is the central control box of the gunsight. With this unit the pilot can select the sight computing function; either bombing, gunfire, or rocketfire. In addition, various rocket types and dive angles may be selected for the rocket function. In gunfire, a TR–(train), HI–(high), and LO–(low) switch allows the pilot to select the target-speed-to-fighter-speed ratio that most nearly approximates his attack conditions. It sets the sight to compute either for a training target, a high speed target, or a low-speed target.

The comparable unit in the A-1 is called the *rocket selector unit*.

With this unit the pilot may select the type of rocket for which he wishes the sight to compute, and the desired dive angle. The A-1 has nothing comparable to the TR, HI, LO Switch. This switch improves the accuracy of the A-4 over the A-1.

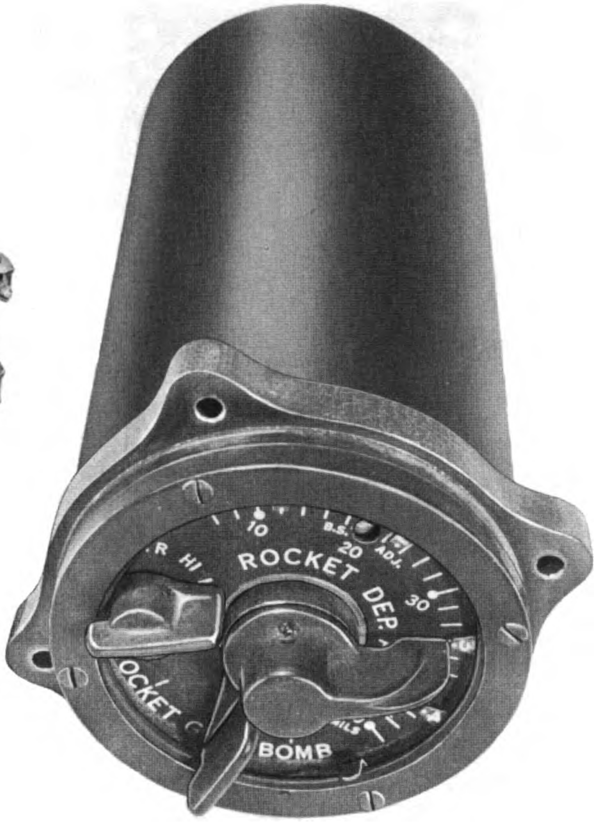

A-4 Sight Selector Unit

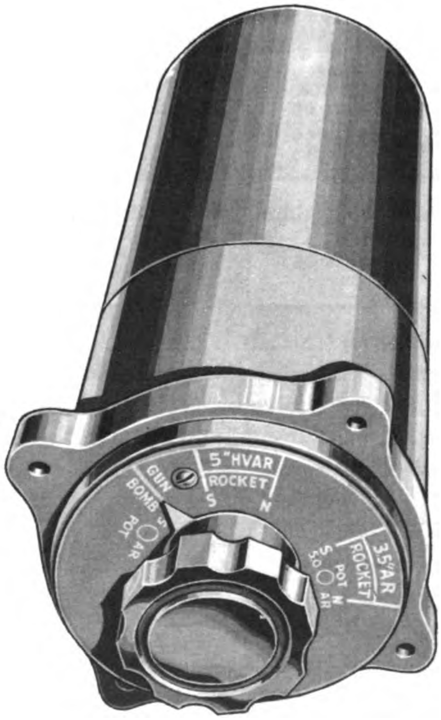

A-1 Rocket Selector Unit

Digitized by Google

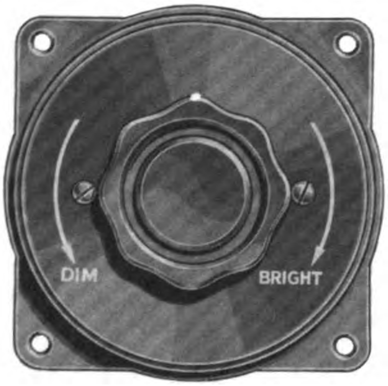

Dimmer Control

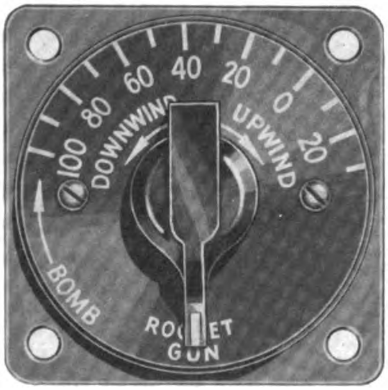

Bomb-Target-Wind-Scale

The *dimmer control* allows the pilot to increase or decrease the brightness of the reticle picture merely by rotating the rheostat dial.

The *bomb-target-wind scale* is used only in the bombing function of the sight. It permits the pilot to put in corrections for either headwind or tailwind bombing passes. It will be discussed later in more detail in the bombing function.

The *power supply* originates in the aircraft generator and is distributed to the sight components via the secondary bus bar. Naturally, the 28-volt DC output of the generator is not of the proper type or magnitude to power all of the varied components of the sight system. For instance, the amplifier requires a relatively high voltage to amplify the very tiny signals that it receives. Therefore, the output of the generator must be increased in voltage before being sent into the amplifier. To aid in obtaining electrical currents of the proper magnitude and cyclic output, several inverter and converter units are used.

The power supply diagram is shown below.

The aircraft generator is the primary power source. It delivers a 28-volt direct current

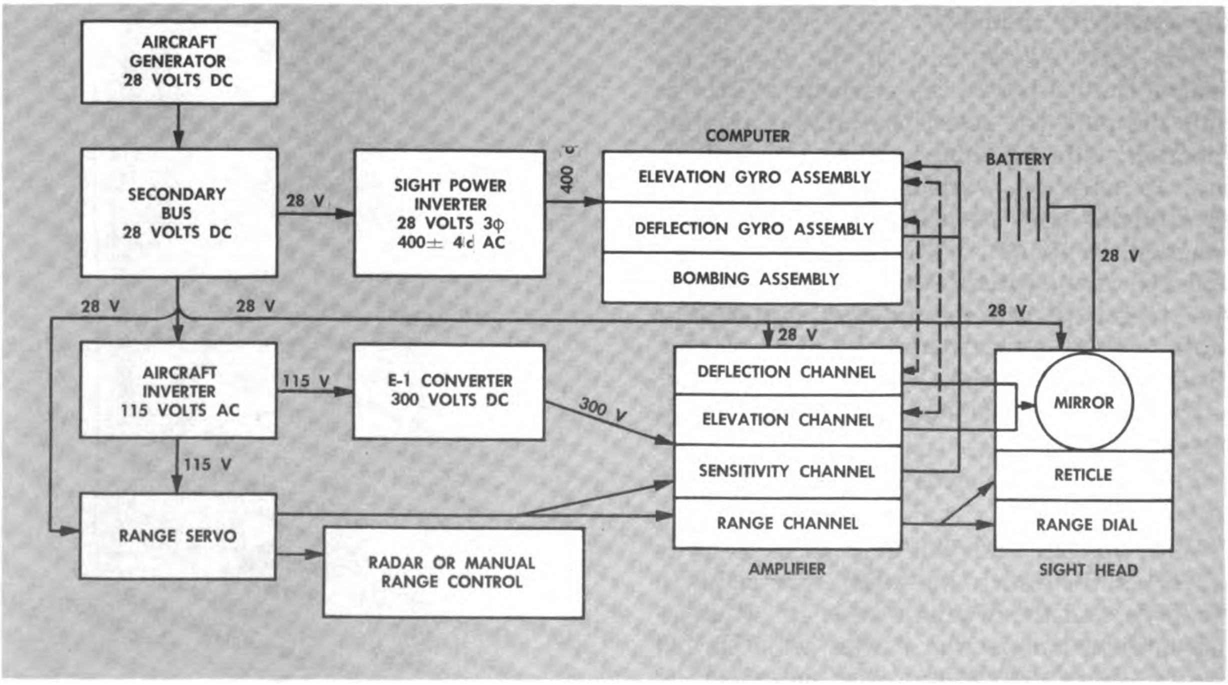

Power Supply Diagram

Digitized by Google

via the secondary bus bar to the following units.

a. Sight power inverter, which converts the current into a 28-volt, 3-phase, alternating current of 400 ± 4 cycles.

b. Aircraft inverter, which boosts up the voltage to a 115-volt alternating current.

c. Range servo, where it powers the manual ranging relay, space heater, and pilot light.

d. Amplifier, where it is used to operate six relays within that unit. These relays will be discussed later in detail, all of them except one are used only in the automatic bombing function. The main power supply for the amplifier comes from the E-1 converter.

e. Sight head, supplying current for the sight reticle light source.

The aircraft battery has no function in the power supply system. It is mentioned here merely because there is an outlet provided from the sight head for connection to the battery. If the generator should malfunction, this connection would allow the battery to continue to supply power for the light bulb. Therefore, the pilot would still have a fixed optical sight even with generator failure. Presently, however, this connection is not being utilized in any Air Force aircraft.

The 115-volt aircraft inverter transforms the generator output into an alternating current of higher voltage. In addition to its normal aircraft functions, it supplies 115 volts to the E-1 converter.

The E-1 is an electronic converter that transforms the aircraft inverter output into a higher 300-volt output which it delivers to the amplifier. This is the voltage that furnishes the main power for the amplifier operation.

The sight power inverter transforms the input from the generator into a 28-volt, 3-phase, alternating current of 400 ± 4 cycles for use in the sight computer assemblies. The primary job of this unit is to maintain the 400-cycle output. The output is very essential for the proper operation of the computer, since it controls the rpm of the gyros. For every one-cycle change, the gyro rpm will vary by approximately 60 rpm. The prediction angle computations of the computer will be inaccurate unless the gyro rpm is maintained within very close limits.

Many modifications of the sight power inverter have been tried in an attempt to find a unit that was both sturdy and accurate enough in its cyclic output.

a. Electronic sight power inverters are the best from the standpoint of sight accuracy. They can maintain the cyclic output within the very close limits required (±4). However, they are quite fragile, and a rough landing or a violent maneuver with the aircraft can damage them, causing them to fail. The D-2 and the D-4 are types that have been used. The D-4 was a more sturdy version of the earlier D-2.

b. Rotary inverters were then used. These units were very sturdy and could withstand rough treatment without failing. Their main drawback was that they could not maintain the cyclic output within the desired tolerances to insure accurate computations. The D-7 was the most popular of this type, and until recently, was being installed in all aircraft.

c. Presently, an improved version of the D-4 is being adopted. It is fast replacing the D-7 in the field and is being installed in all new aircraft. The use of this inverter has resulted in slightly more accurate calculations by the sights.

DETAILED INFORMATION ON A-SERIES SIGHTS

This section covers the sight components in greater detail.

Amplifier

The amplifier contains the principal components required for the amplification of the weak signals that it receives. It transforms them into signals strong enough to be used by other components within the sight. As mentioned earlier, it has four channels. The various components are shown in the diagram on the following page.

The *range channel* receives and amplifies range information transmitted from the range servo. It sends the amplified range information into the sight head, positioning the range dial and the reticle size. This is not a necessary

Digitized by Google

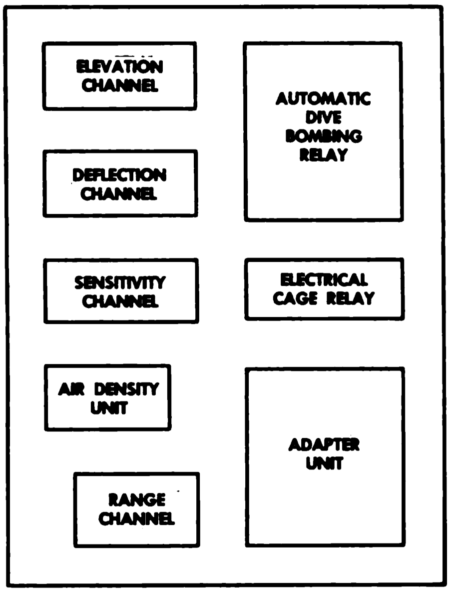

Schematic Diagram of Amplifier Components

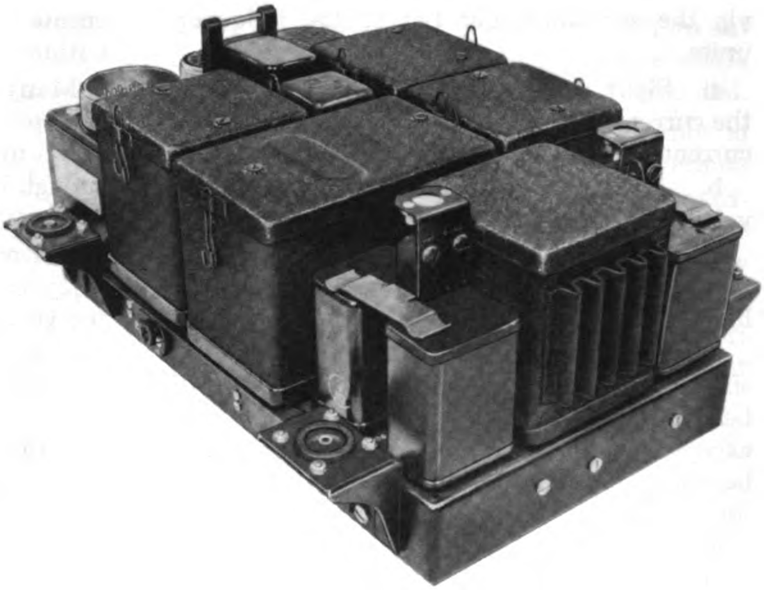

A-4 Amplifier

part of the computing operation. It could be removed from the system and still the sight would provide correct computations of the prediction angle. When the sight is working properly, its functions of varying the reticle size and moving the range dial merely provide added information for the pilot's convenience. However, if the radar fails and the sight must obtain range information from manual ranging, then this information becomes vitally important. In order for the pilot to manually range a target, he must have control over the reticle size. This is obtained through the operation of the range channel.

The *sensitivity channel* receives and amplifies range information from the range servo. This range data first passes through the air density unit. This channel then transmits the amplified range information to the stiffness units of the elevation and deflection gyro assemblies of the sight computer. These, in turn, create a restraint or stiffness upon the movement of the gyros, dependent upon the range to the target. It is this range information that is used in the actual calculation of the prediction angle. It controls the gyro sensitivity to aircraft turning rate, that is, it controls the amount the gyro will precess in response to aircraft movement. At long ranges the gyro will precess greatly in response to small changes in the flight of the aircraft. In this case, the gyro is highly sensitive. Short ranges will result in low gyro sensitivity, that is small responses to aircraft movement. Since the movement of the gyros control the pipper action, the pipper reacts similarly in sensitivity in response to varying ranges and aircraft movement.

The *deflection channel* receives information from the pickoff unit of the deflection gyro assembly regarding the displacement of that gyro. After that small signal is amplified, it is transmitted to the deflection torque motor in the sight head. This unit then positions the prediction mirror with the deflection component of the prediction angle.

The *elevation channel* receives information from the pickoff unit of the elevation gyro assembly regarding the displacement of that gyro. Similarly, it amplifies that signal and sends it to the elevation torque motor in the sight head. This unit then positions the prediction mirror with the elevation component of the prediction angle.

The *air density unit* is also a component of the amplifier. It is used to compensate for the effect of air resistance on the speed of a projectile after it leaves the gun muzzle. It consists of a potentiometer whose shaft is linked and geared to an aneroid bellows sealed

Digitized by Google

at standard atmospheric pressure. The entire unit is mounted in a housing that is maintained at local static pressure. As the altitude of the aircraft is increased, the air pressure decreases, causing the aneroid bellows to expand. This movement of the bellows moves the potentiometer shaft which, in turn, varies an electrical signal that is a measure of the relative air density. The air density unit modifies the range information sent to the sensitivity channel from the range servo. As the altitude increases, resulting in an increased bullet velocity, the unit makes a small calibrated addition to the strength of the range information being sent to the sensitivity channel. From there, the modified signal is transmitted to the elevation and deflection computer stiffness units, thereby introducing the correction for air density into the prediction angle computation.

The *electrical cage relay* is one of the six relays mentioned earlier as a part of the amplifier. The other five are used only when the sight is operating as a bomb sight. They are inactive at all other times. The electrical cage, however, is operational during all the sight functions. The unit was placed in the sight system primarily to afford the pilot a rapid means of bringing his reticle image back into his field of vision if it should ever disappear as a result of a violent maneuver. When the electrical cage button the on throttle is engaged, the relay in the amplifier disconnects the normal flow of range information from the sensitivity channel to the computer gyro assemblies. It then allows an artificial fixed range signal to be transmitted into the stiffness units of the gyro assemblies. In the A-1 the electrical cage range is approximately 600 feet. In the A-4, this artificial range input was increased, but it is sufficient to accomplish the purpose of the unit. Generally, the A-4 range input in electrical cage will be very close to 850 feet.

The five *bombing relays*, although a part of the amplifier, are discussed in detail in the section on bombing function.

The *adapter unit* appears only in the A-4 amplifier. The A-1 has no comparable unit. This unit makes it possible to interchange the components of the sight in the field, facilitating maintenance in the A-4 sight system.

The A-4 amplifier differs from the A-1 amplifier as follows:

a. The A-1 amplifier is one single unit with its various functions not visibly differentiated. If one major part of the amplifier fails, the whole amplifier is inoperative and must be replaced.

b. The A-4 amplifier is subdivided for better and faster maintenance. It is actually separated according to its various functions — the four amplifying channels, the air density unit, the relays, and the adapter unit — both visually and functionally. If any one of the components in the A-4 amplifier malfunctions, that unit may simply be removed and replaced with a new unit, which will already be properly calibrated. This greatly simplifies and speeds up maintenance, allowing the sight to remain in the field longer, and in commission a higher percentage of the time.

Computer

The computer contains the two gyro prediction assemblies and the bombing assembly. In the gunfire function the two gyro assemblies are responsible for computing the elevation and deflection components of the prediction angle. In the bombing function the computer calculates the release point for bombs. The gyros make their computations on the basis of the range information input from the sensitivity channel of the amplifier, and the angular velocity input from the motion of the attacking aircraft as it tracks the target.

The *elevation gyro assembly* computes the elevation component of the prediction angle. Its components are shown in the illustration on the following page.

The *elevation gyro* is mounted with a single plane of freedom gyro gimbal. It is connected to the computer shaft by a mechanical ball-and-arm arrangement. The connection is such that the computer shaft will rotate in response to gyro precession. The amount that it rotates is a direct measurement of the amount of gyro movement.

The *elevation pickoff unit* reports the amount of movement of the gyro to the elevation channel of the amplifier. The coils of the pickoff unit generate a magnetic field. An

Digitized by Google

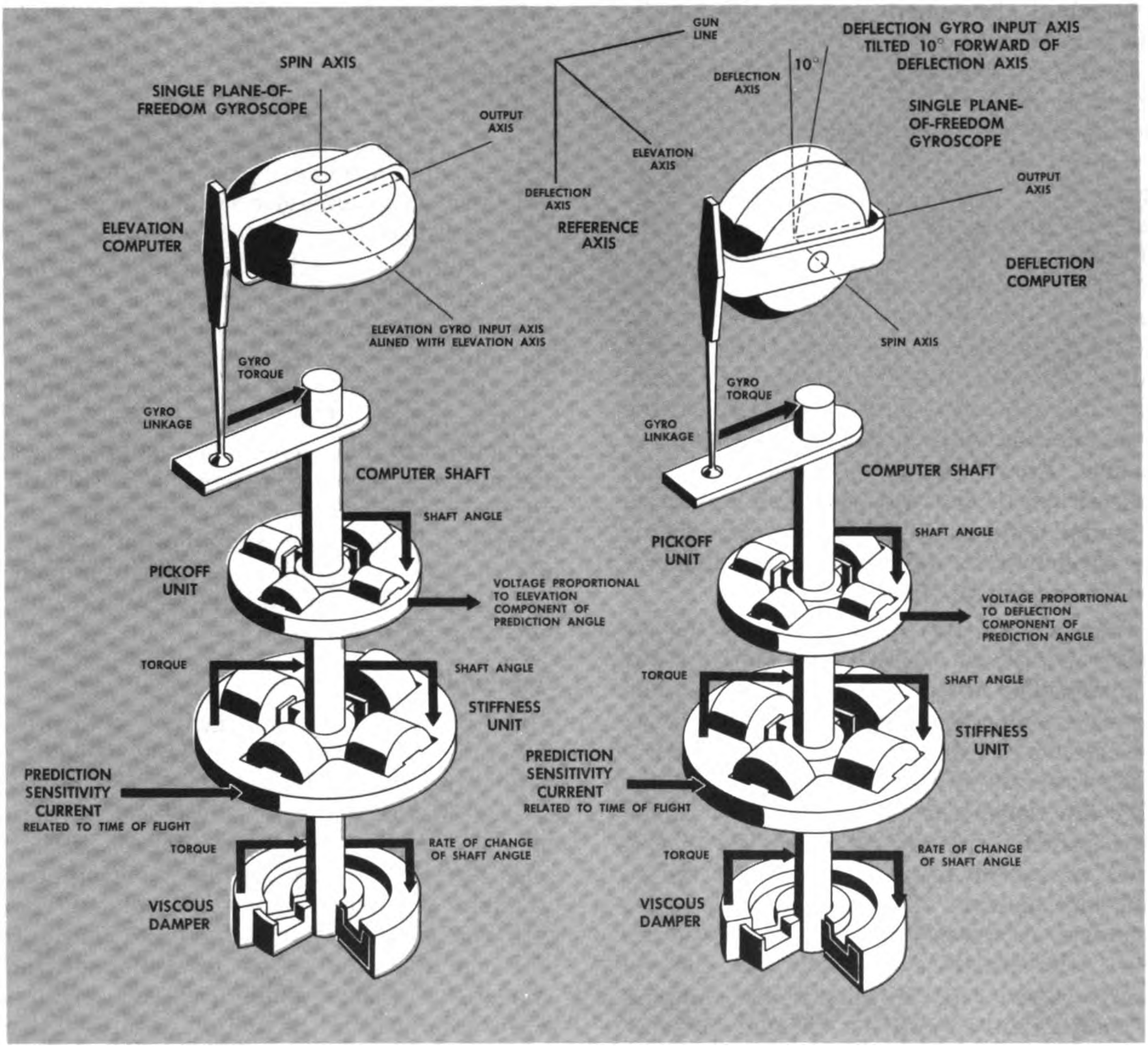

Elevation and Deflection Computing Assemblies

armature is attached to the computer shaft so that it turns within this field. When the computer shaft is rotated by the gyro, a current is generated in the coils proportional to the gyro movement. This is the voltage delivered to the amplifier. It is a measurement of the amount of gyro precession.

The *stiffness unit* throws restraint upon the movement of the computer shaft, which therefore causes restraint to be applied to the movement of the gyro. The restraint current comes from the sensitivity channel of the amplifier and is an expression of target range. Short ranges produce high restraint. Longer ranges produce less restraint. The design of the stiffness unit is very similar to that of the pickoff unit. It contains four coils arranged around an armature attached to the computer shaft. The range information is sent into the four coils, resulting in a magnetic field emanating from the coils. These magnetic fields grip the armature and tend to hold it in a neutral position. The strength of the magnetic field and the force with which the armature is held in its neutral position depend on the range information supplied to the unit. As the gyro precesses causing the computer shaft and its attached armature to rotate, a magnetic restraint is applied to the movement of the armature as it attempts to move from its neutral position. In applying restraint upon the movement of the armature, the stiffness unit is also applying restraint to the gyro precession, modifying the magnitude of its computation for range.

The *viscous damper* is merely a cavity at the base of the computer shaft which is filled with a heavy viscous fluid, and within which the base of the computer shaft rotates. It accomplishes three very important functions.

a. It prevents damage to the gyro assemblies that might result from a hard landing or a violent maneuver.

b. It smooths out the oscillations of the gyro as it searches for the proper depression position. This operation smooths out the oscillations of the pipper and makes tracking easier for the pilot.

c. It relates the angular velocity of the aircraft to the angular velocity of the sight line. As long as the amount of lead is constant, the angular velocity of the aircraft and sight line are identical. If the lead angle is changing, these two angular velocities are not equal. The sight line always lags behind aircraft movement. Since the pilot keeps the pipper upon the target, the sight line angular velocity is the correct measurement of the target motion. Since the computer measures the attacking aircraft's angular velocity, the measurement must be modified and related to the true measurement of target motion, that is, the sight line. The viscous damper accomplishes this function. This is the most important of its functions from the standpoint of accuracy of the lead calculation.

The viscous damper is the unit within the sight that makes a 15-minute warmup necessary. Obviously, it is necessary to maintain the temperature of the viscous fluid within very close limits to insure proper working of the sight. Heaters surrounding the viscous damper maintain the proper temperature of the fluid.

From the instant the aircraft generator starts working, the viscous damper heaters start warming the fluid. It takes 15 minutes from engine startup to insure the proper temperature of the viscous damper fluid.

From the time the gunsight master switch on the armament panel is turned on, an additional 1 to 2 minutes is required for the tubes in the amplifier to warm up, and start working properly. If this switch is engaged during the first 13 minutes, then 15 minutes is all the time required for sight warmup.

If you have been airborne for 30 minutes without the sight master switch engaged, the sight will still need 1 to 2 minutes after it is turned on before the amplifier will operate properly.

There are four heaters within the main components of the sight.

a. A damping fluid heater is located in each gyro assembly.

b. A sight head heater maintains temperature of the metallic parts in the sight head.

c. A computer heater regulates the temperature of the computer parts.

The *gravity drop accelerometer* is attached to a lever arm extending out from the elevation gyro gymbal as shown in the illustration below. The torque that it exerts on the gyro results in a computation of the elevation component for gravity drop.

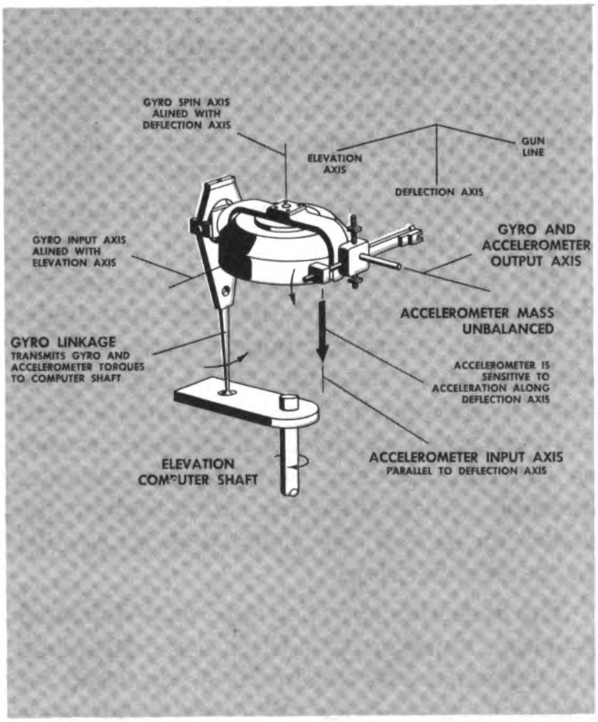

Gravity Drop Accelerometer

Digitized by Google

While the wings of the fighter are level, only an elevation component for gravity drop is needed. In this case, the gravity correction is computed as follows.

a. The gravity drop accelerometer precesses the gyro down until the restraint applied by the stiffness unit equals the force applied by the accelerometer. A balanced condition then exists between the two forces.

b. As the range increases, the restraint upon gyro movement decreases. This allows the gravity drop accelerometer to precess the gyro an additional amount providing a greater gravity correction for the increased range.

c. As range decreases, the stiffness unit restraint increases. This increased stiffness force applied to the gyro movement, being greater than the accelerometer force, causes the gyro to partially right itself. This takes out a part of the accelerometer induced precession, providing a smaller gravity correction for the shorter range.

When wings of the fighter are not level, a deflection gravity drop correction is required in addition to the elevation component. It is not possible to use an unbalanced accelerometer mass on the deflection gyro. Since the aircraft is always flown in a coordinated manner, no resulting force would be applied to the accelerometer mass. Therefore, to supply this correction, the stiffness of the deflection gyro assembly is offset so that its computation will contain a small calibrated correction for gravity drop while the aircraft is in a banking attitude.

The *deflection gyro assembly* computes the deflection component of the prediction angle. It has the same component parts as the elevation gyro assembly minus the gravity drop accelerometer. These components serve the same functions and act in the same manner as the corresponding units in the elevation assembly, except that their action is about the deflection axis of the sight, that is, parallel to the aircraft wings.

The deflection gyro performs one additional function, however. It is tilted down 10° along the deflection axis to provide a correction for cross-roll error. Cross-roll error is the error resulting from rolling the wings or changing the bank of the aircraft while tracking a target with the sight depressed. It is the same as the pendulum action of the fixed sight that is encountered when trying to keep the pipper on a ground target in a bomb run with the pipper depressed 70 or 80 mils. The 10° tilt of the gyro is such that the rolling action of the wings produces a force on the gyro. This causes the gyro to precess and reposition the pipper during the roll. The correction makes it possible for the pilot to increase the bank of the aircraft in a pursuit curve, still keep the pipper on the target, and also hit the target with his fire. It makes the roll error in the sight negligible in the gunfire function. However, it is designed to correct only for normal roll encountered in an average pursuit curve. Violent roll will not be completely compensated.

Although the TR-HI-LO (train-high-low) switch is a part of the A-4 selector unit, its action is applied within the computer.

The TR-HI-LO switch is sometimes referred to as the target speed selector. It allows the pilot to change the sight computing to be more accurage for varying target speed conditions. It was included in the A-4 sight in an effort to surpass the accuracy of the A-1. The A-1, as mentioned earlier, has no comparable unit. This unit provides three different calibration curves within the A-4, and the pilot may select the one that most nearly approximates his firing conditions.

TR is the average training pursuit curve selection. This is the proper selection for training engagements where the attacker is at moderate speed and the target is at low speed.

HI is the average fighter-versus-fighter pursuit curve selection. It should be used when the target's speed is high in relation to the fighter's speed.

LO is the average low-speed target pursuit curve. It should be used for a high fighter speed and a low target speed.

The target speed-to-fighter speed ratio determines the type of pursuit curve that a pilot must fly. The TR-HI-LO selections represent the following target-to-fighter speed ratios.

Digitized by Google

Selection	*Target Speed*	*Fighter Speed*	*Approx-imate Ratio*
TR	205	300	2:3
HI	511	600	5:6
LO	205	600	1:3

If the attack exactly matches the above conditions, the impact point will be very close to the pipper. As it varies from the above calibrated conditions, the impact will vary from pipper position slightly.

The A-1 has only one curve calibrated into it. The exact target-to-fighter speed ratio is not known. However, it is a fighter-versus-fighter calibration very similar to the HI curve of the A-4. This explains the underlead characteristic of the A-1 against aerial training targets. The A-4, in HI position, will also underlead a training target in much the same manner as the A-1. The A-1 lead for fighter-versus-fighter conditions will be quite accurate. However, since the A-1 has only one average pursuit curve calibration, the impact point for different attack conditions may vary from the pipper position by a slightly greater amount than it will when using the A-4 sight.

The TR-HI-LO switch modifies the stiffness current applied to the deflection gyro within the computer. Using TR as the standard computed prediction angle, HI will provide greater restraint and a smaller prediction angle for any given target than will the TR position. LO will provide less restraint and a larger prediction than will TR.

The *bomb drop assembly* is used only when the sight is operating in bombing function and is discussed in detail in a later section of this chapter.

Sight Head Assembly

The sight head assembly has the job of presenting to the pilot, by means of the reticle image, a continuous indication of the prediction angle. It has the components shown in the diagram on this page.

In the *elevation torque motor* and *elevation torque motor pickoff* assembly, the elevation torque motor receives the amplified signal of the amount of gyro precession from the elevation channel of the amplifier. The signal to the torque motor results in a shaft being rotated that, through a system of levers, positions the prediction mirror.

The pickoff measures the amount of rotation of the torque motor shaft, and returns that signal to the elevation amplifier. When this

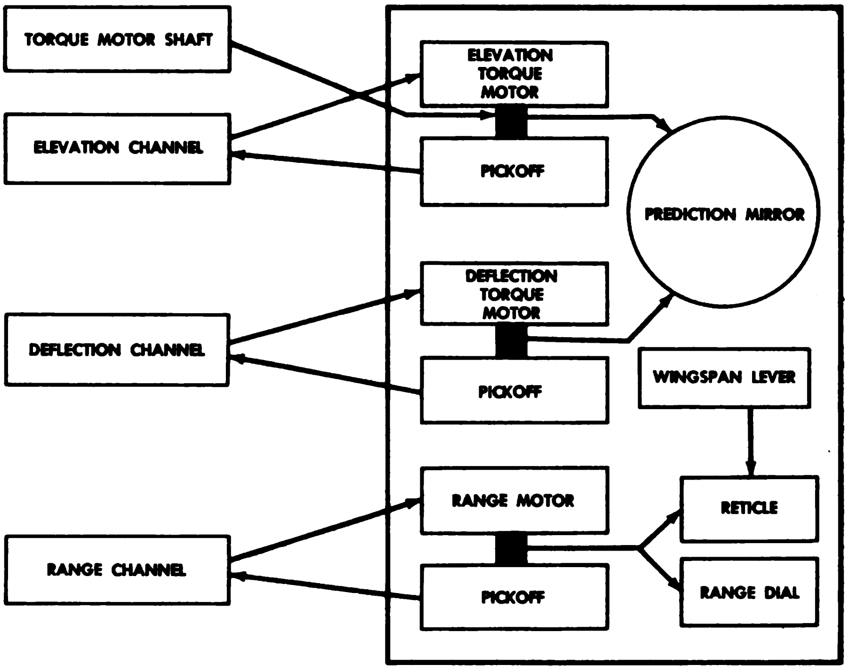

Schematic Diagram of the Sight Head Torque Motor Assemblies return signal to the amplifier equals the input from the gyro pickoff unit, the torque motor ceases to rotate, and the mirror position is held constant.

The components of the *deflection torque motor* and *deflection torque motor pickoff assembly* operate exactly the same as the corresponding units in the elevation assembly. They act in response to the amplified signal of the deflection gyro from the amplifier. They, in turn, position the prediction mirror with the deflection component of the lead angle.

The elevation torque motor assembly and the deflection torque motor assembly are combined mechanically by a ball arm and lever arrangement. They get their impulses individually from their respective channels of the amplifier. Their mechanical connection, the ball arm, enables them to position the prediction mirror jointly to give the total prediction angle to the pilot. The ball arm mechanical connection is quite fragile. It is this unit that is damaged by a violent maneuver or a hard landing with the sight in the uncaged position, and not the gyros as is commonly believed. The action of the viscous dampers makes it difficult to damage the gyros. The ball arm, when damaged, results in improper positioning of the prediction mirror, and necessitates reharmonization of the sight.

The *prediction mirror* receives the information from the elevation and deflection torque motors and is positioned accordingly. It reflects the reticle image onto the sight reflector plate presenting the sight picture of the proper prediction angle to the pilot.

The two components of the *range motor* and *range motor pickoff assembly* operate in the same general manner as their corresponding parts in the elevation and deflection torque motor assemblies. This assembly, however, gets its information from the range channel of the amplifier.

The action of the range motor is to position the range dial properly to present a visual range indication to the pilot, and to vary the size of the computing reticle as the range varies.

The *wing span control* is located on the sight head, and is operated by the pilot primarily for manual ranging. The wingspan scale is calibrated from 30 to 120 feet. The pilot puts the target wingspan information into the sight by positioning the span scale pointer. This varies the basic size of the reticle and calibrates the ranging system so that by spanning a target's wings, accurate range information will be fed into the sight computer. The correct wingspan setting is unimportant when the sight is operating in its full "radar" function. The radar measures the time for an impulse to travel to the target and back. The wingspan setting has no effect on its accuracy. During radar ranging, however, the reticle size will vary continuously even though it need not necessarily span the target's wings. Accurate wingspan settings are only important during manual ranging.

The *range dial* is located in the sight head and presents the target range information to the pilot. It is marked with indications for ranges from 600 to 6,000 feet. However, markings on the drum beyond 4800 feet are too small to be useful to the pilot. It is positioned by the radar or by manual range information acting through the range channel and range motor assembly. It is not necessarily an indication of the exact range for which the sight is computing. A master range dial in the range servo determines the range information sent into the amplifier channels and hence to the computer. The sight head range dial should read the same as the range servo dial. However, due to manufacturing tolerances of mechanical and electrical components, it may be off in its indications as much as plus or minus 150 feet at long ranges.

The *optical system* consists of the components that form the reticle image and present it to the pilot. It collimates all the light rays of the reticle and focuses them at infinity. The reticle image will, therefore, appear to be superimposed upon the target regardless of the target's range.

The *A-1 optical system* is shown in the illustration on the following page.

The A-1 optical system has two light bulbs, each with a primary and a secondary (or emergency) filament. You can select the secondary filament by engaging a switch on the armament panel. One of the light bulbs forms

Digitized by Google

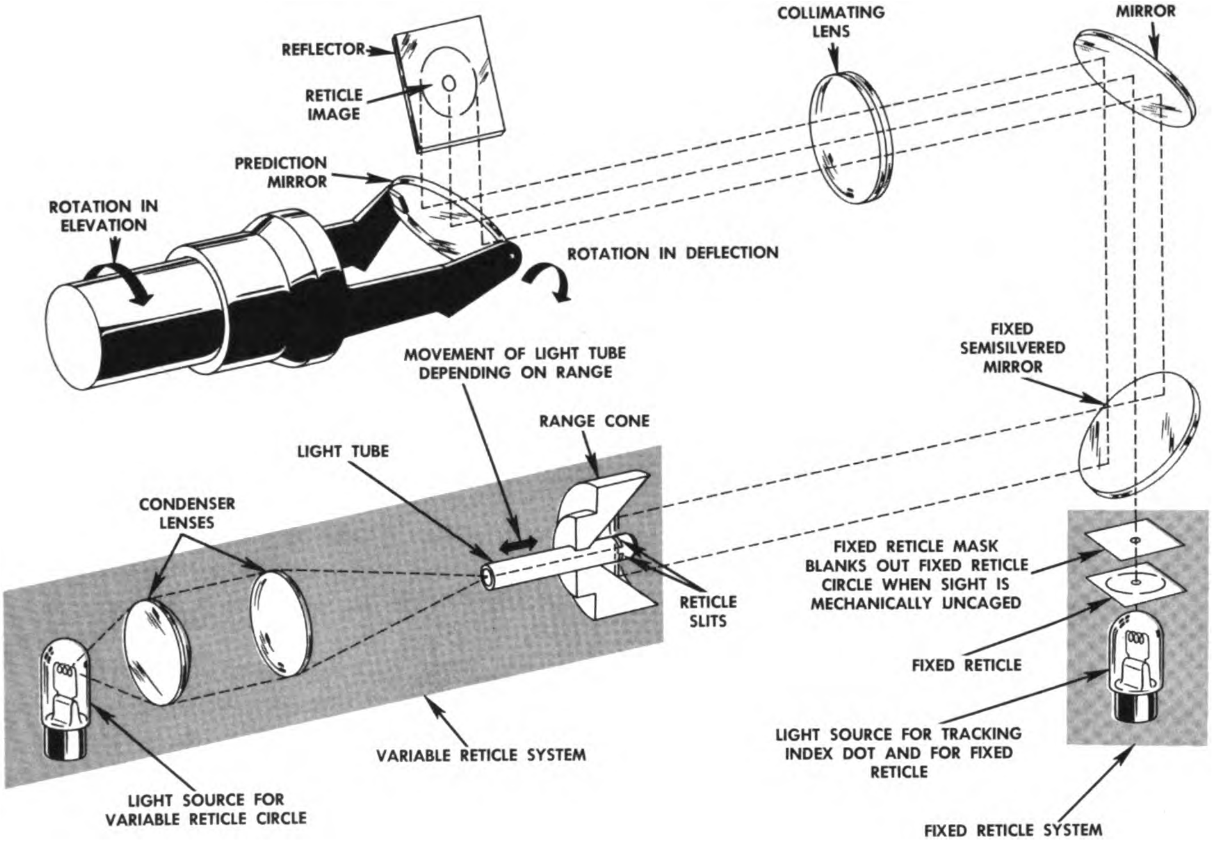

A-1 Optical System

the light source for the variable computing circle; the other forms the pipper light source, with an additional function as the fixed reticle light source.

The A-1 computing circle assembly consists of two condenser lenses to focus the light rays into a light tube. The light tube is a coated quartz rod that prevents any of the light rays from escaping. The light rays are transported through the quartz rod to its opposite end which extends into the range cone. The inner face of the range cone is a mirror. Near the end of the quartz rod, a thin line around the rod is uncoated. In the diagram this is labeled as reticle slits. Here the light rays escape to form a continuous reticle circle on the cone mirror. The quarts rod is moved in and out within the cone mirror, increasing or decreasing the size of the circle as the range or wingspan controls are changed. The range motor varies the position of the quartz rod to vary the circle size for range. The wingspan varies its position for target size.

The range cone mirror reflects the circle image to the fixed semi-silvered mirror. This mirror reflects the image up to the fixed mirror. At the same time, it allows the pipper to pass through it from beneath so that the pipper joins the reticle circle at the fixed mirror.

The pipper is supplied by the second light bulb located below the semisilvered fixed mirror. This light source also supplies the fixed 100-mil broken reticle image that is displayed when the fixed reticle mask is raised by the mechanical caging lever.

From the fixed mirror, the circle and pipper, now combined, are directed through the collimating lens and onto the variable position prediction mirror.

Digitized by Google

The prediction mirror directs the reticle picture onto the reflector plate displaying the proper prediction angle to the pilot.

The minimum size of the A-1 computing reticle is 20 mils. The maximum size is 160 mils.

The *A-4 optical system* is illustrated on this page.

The reticle in the A-4 is a 10-diamond circle, which is formed by rotatable disks. The mechanism is very similar to that used to form the K-14 computing reticle. It consists of the following components:

There is only one light bulb with a primary and secondary filament. It provides the light for both the computing and fixed sight pictures.

The diamond reticle assembly provides a more intense illumination of the circle than the reticle system of the A-1.

The reticle mechanism consists of three disks: one controlled by the range control, one by the wingspan control, and a masking disk between the two.

The range reticle disk is composed of 10 spiral lines. This disk is alined with the other two disks to allow each spiral line to form a diamond of the circle. It is rotated by the range motor to vary the size of the circle in response to the range of the target.

The wingspan disk contains 10 spiral lines in the opposite direction of those on the range disk. It is set by the span control lever.

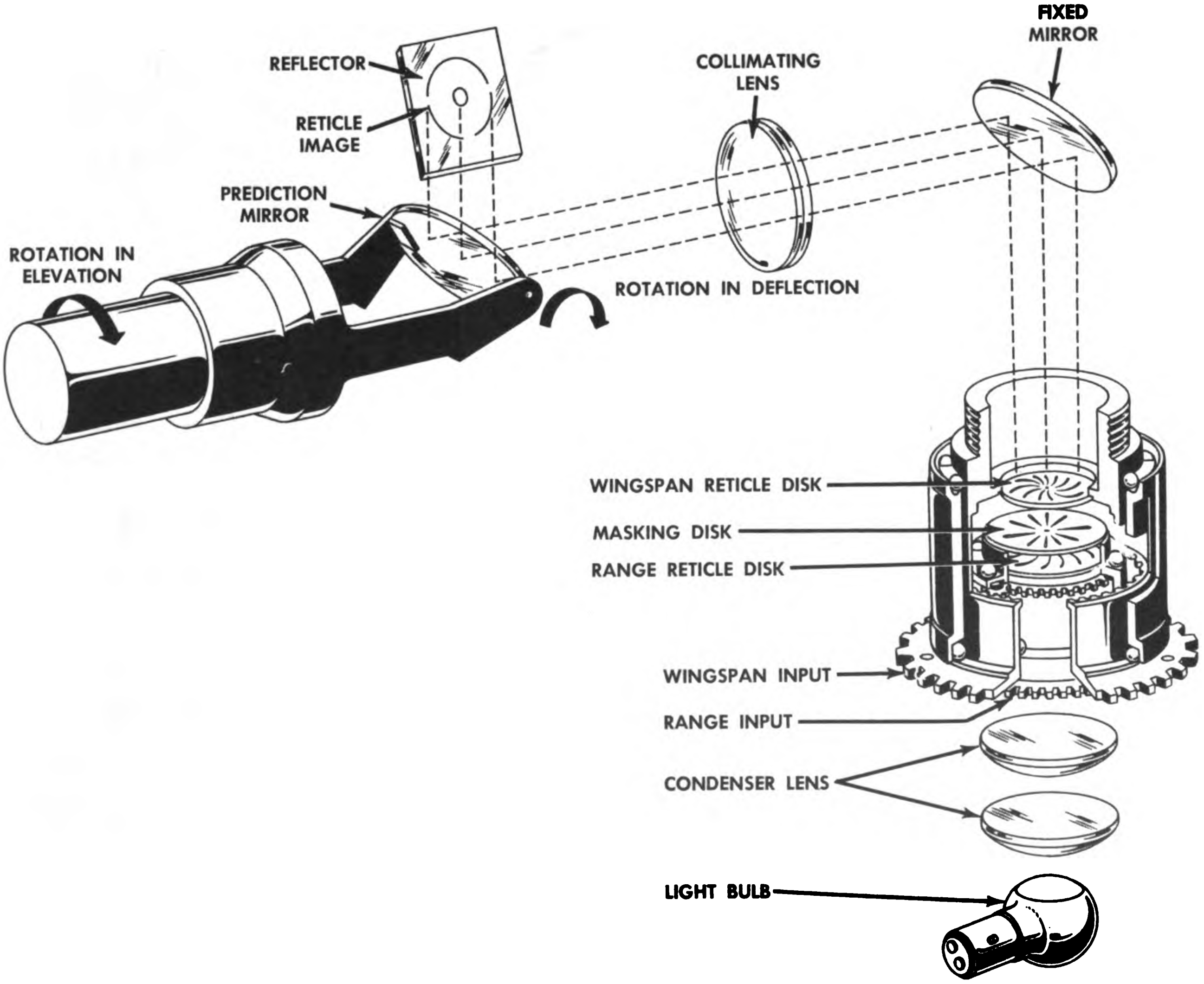

A-4 Optical System

The masking disk contains 10 linear radial lines and allows only 10 diamonds to be displayed. The design of the spirals is such that it is possible to have a second row of diamonds without the masking disk.

The fixed mirror reflects the reticle image through the collimating lens to the prediction mirror, and from there up to the reflector plate to the pilot.

The minimum reticle size of the A-4 computing reticle is 16 mils, the maximum size is 150 mils.

The *mechanical caging lever* inactivates the computing system and provides a fixed optical sight as an alternate sight for the pilot.

In the A-1 sight, the manual caging lever accomplishes the following:

a. It mechanically locks the prediction mirror in a set position.

b. It extinguishes the variable reticle light source.

c. It raises the fixed reticle mask exposing the fixed sight picture.

d. It disconnects the power supply (300 volts) to the amplifier, inactivating the computing system of the sight.

In the A-4 sight, the following things occur when the manual caging lever is engaged.

a. It mechanically locks the prediction mirror thereby fixing its position.

b. The computing system is deenergized by disconnecting the power supply to the amplifier.

c. A microswitch is energized that causes the range motor to drive the range reticle disk to the 600-foot range position.

Because of the nature of the caging system in the A-4, the pilot will not always have a fixed 100-mil reticle in the caged position as in the A-1. The reticle size will depend upon the wingspan setting. To determine the reticle size in the caged position, you can use the following ratio. (Keep in mind that the range is locked at 600 feet.)

$$\frac{\text{Wingspan setting}}{\text{600 feet}} = \frac{\text{mil value}}{\text{1,000 feet}}$$

Therefore:

$$\frac{\text{Wingspan} \times 1{,}000}{600} = \frac{\text{mil value}}{\text{of reticle.}}$$

EXAMPLE:

$$\text{Wingspan} = 60 \text{ feet; caged}$$

$$\frac{60 \times 1{,}000}{600} = \text{mil value}$$

$$\text{Reticle mil value} = 100 \text{ mils.}$$

Therefore, in order to obtain a 100-mil reticle with the A-4 gunsight manually caged, you must set the wingspan at 60 feet.

A ratio similar to the one above can be used for determining the mil value at any setting of the range, or it can be used to determine the wingspan setting to obtain a desired reticle mil size for a given range. Examples are given below:

a. Determination of the mil value at a range of 1200 feet, wingspan set at 60 feet.

$$\frac{\text{Wingspan setting}}{\text{range}} = \frac{\text{mil value}}{\text{1,000 feet}}$$

$$\frac{60}{1{,}200} = \frac{\text{mil value}}{1{,}000}$$

$$\text{Mil value of reticle size} = 50 \text{ mils}$$

b. Determination of wingspan setting to obtain a 30-mil reticle with the range set at 1,100 feet.

$$\frac{\text{Wingspan}}{1{,}100} = \frac{30}{1{,}000}$$

$$\text{Wingspan} = \frac{30 \times 1{,}100}{1{,}000}$$

$$\text{Wingspan} = 33 \text{ feet.}$$

Due to manufacturing tolerances in the mechanical caging mechanism, the caged pipper will not always be positioned exactly where the zero prediction computing pipper (the 600 feet of range pipper position) was located. The pilot should be aware of this discrepancy in case he should have to use the fixed sight picture. In the A-1, the manual caged pipper can differ as much as 7 *mils* from the zero prediction pipper position. In the A-4 it may differ as much as 5 *mils*. The correction is made by alternately caging and uncaging the sight until the caged pipper falls as near as possible to the electrical cage pipper position. Only in this manner can the pilot be assured that his caged sight is properly alined with his guns. In later models of the A-4 the electrical cage pipper may be adjusted to coincide with the mechanical cage pipper position.

Digitized by Google

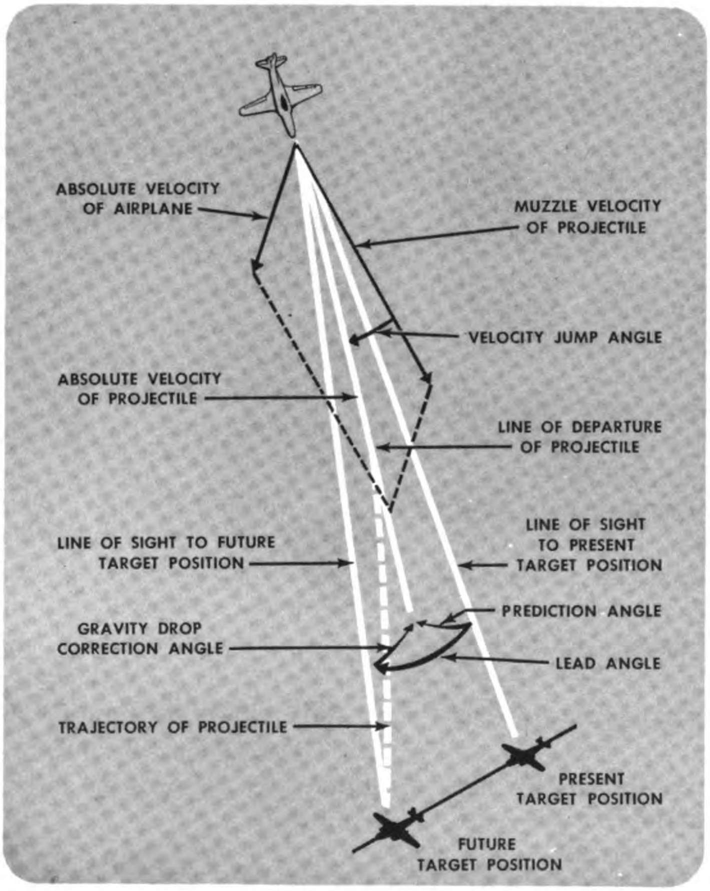

Gunfire

A-SERIES SIGHT GUNFIRE FUNCTION

Operational Factors

The operational factors of A-series sights are known as *inputs* and *corrections*. Some of the factors in the gun sight function listed below are diagrammed in the accompanying illustration.

INPUTS.

a. Range — radar or stadiametric (manual).

b. Angular velocity of the aircraft about the elevation axis.

c. Angular velocity of the aircraft about the deflection axis.

d. Angular velocity of the aircraft about the controlled line.

e. Atmospheric pressure.

f. Resultant linear acceleration, including gravity, along the deflection axis.

CORRECTIONS.

a. Velocity of the target.

b. Velocity of the attacking aircraft.

c. Relationship of the attacking aircraft about the controlled line.

d. Gravity drop of the projectiles.

e. Air density.

f. Range.

Corrections *a*, *b*, and *c* are based on angular-velocity components detected by the gyroscopic elements.

Correction *d* is based on the linear acceleration of the aircraft as detected by the gravity-drop accelerometer in conjunction with the dynamic behavior of the prediction mechanism itself.

Correction *e* is based on the effect of static pressure on the aneroid bellows. The calibration is based on the assumption that the actual

Digitized by Google

pressure variation with changing altitude follows the standard atmosphere.

Correction *f* is based on range information on the assumption that the aircraft carrying the sight follows the proper curve of pursuit against a target that flies in a straight line during the attack.

Radar range information is received automatically during normal operation, and range corrections are based on this information. When the radar range information is not available, the sight takes the required range input from the stadiametric ranging system, which is manually operated by the pilot.

Two main inputs are needed by the sight to provide an accurate prediction angle solution. These inputs are target range information and target motion information.

The flow of gunfire information throughout the system is shown in the illustrations below and on the following pages, and is explained in the following paragraphs.

Target Range Information Flow

The target range information is fed into the range servo by either of two methods.

a. From the automatic radar range unit which supplies high voltage for long ranges and lower voltage for shorter ranges.

b. From the manual ranging twist grip operated by the pilot. This supplies the same type of range information as the radar.

The range servo receives the range information, transforms it into the proper type of electrical signal, that is, low current for long ranges and higher current for shorter ranges. The range is then delivered in usable form to:

a. The range channel of the amplifier.

b. The sensitivity channel of the amplifier via the air density unit.

The range channel of the amplifier, amplifies the range signal and delivers it to the range motor in the sight head.

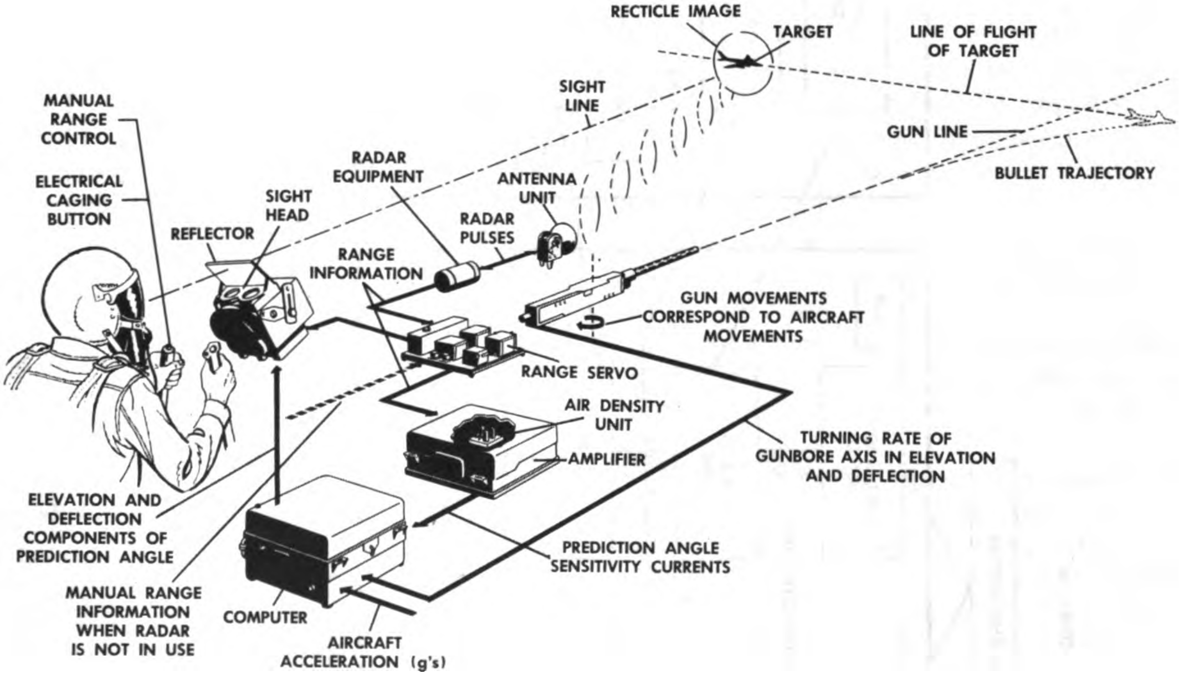

Operation of the A-1 Gun-Bomb-Rocket Sight as a Gunsight

Digitized by Google

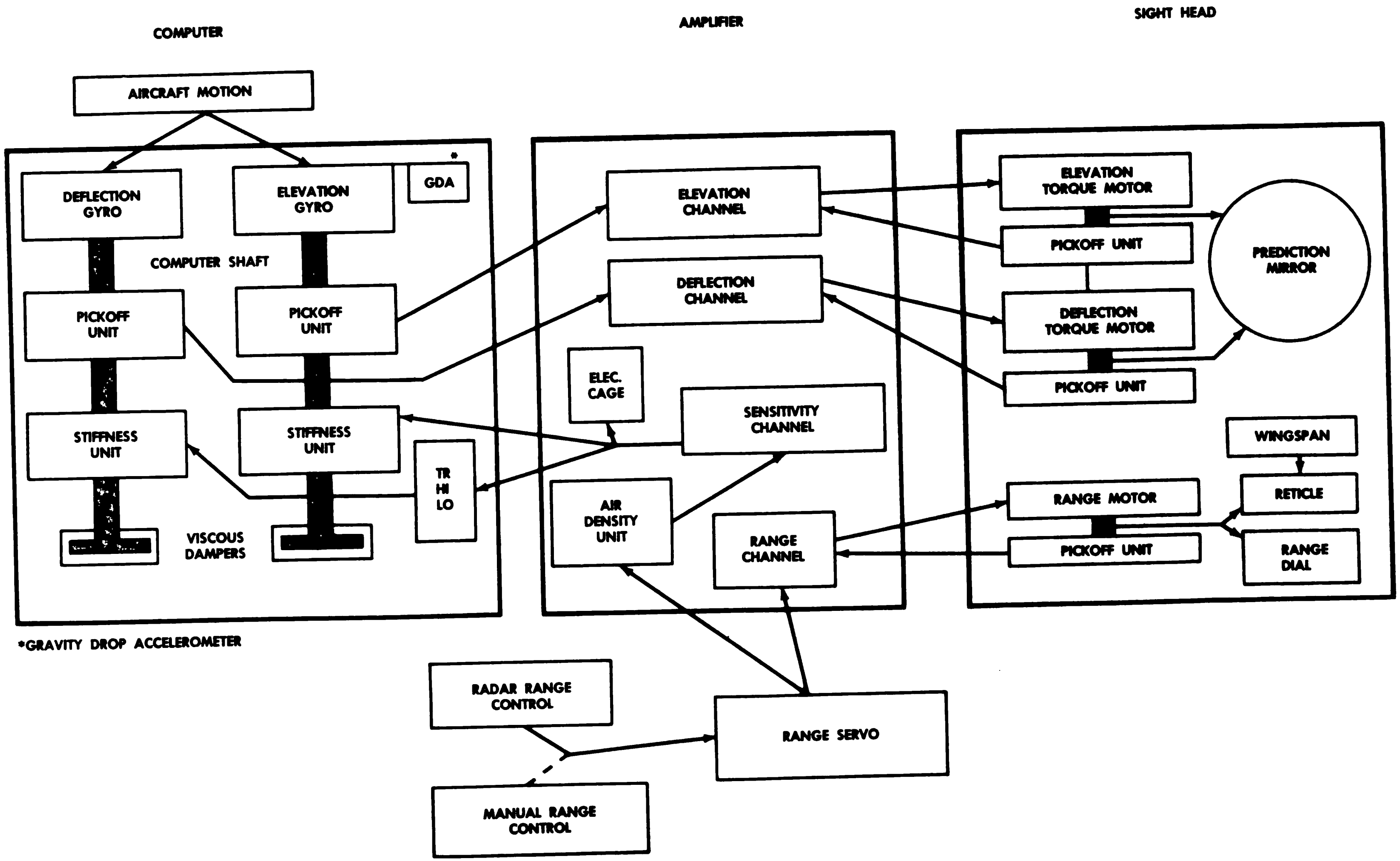

Schematic Diagram of Gunfire Information

Digitized by Google

The range motor accepts the signal and rotates the range motor shaft. This in turn varies the size of the reticle and positions the range dial telling the pilot the range to the target.

The range motor pickoff measures the movement of the range motor shaft and refers that measurement back to the range channel. The range channel compares this return input with the original range input from the range servo. When the two inputs to the range channel are completely balanced out, the position of range dial and the reticle size are held constant.

The range information, delivered to the sensitivity channel of the amplifier by the range servo, first passes through the air density unit where it is corrected for changes in bullet trajectory for altitude.

The air density unit makes a tiny addition to the range current before it is transmitted to the sensitivity channel. Because of the addition, the restraint applied to the gyro movement for range is slightly increased as altitude is increased, compensating for the increased bullet velocity at the higher altitude.

The sensitivity channel receives the corrected range signal from the air density unit, amplifies it, and delivers the range information to the stiffness units of the computer gyro assemblies.

The current to the deflection stiffness unit first passes through the TR-HI-LO switch where it is modified for the target speed-to-fighter speed ratio selected by the pilot.

The stiffness units of the gyro assemblies utilize the range information by applying restraint to the movement of the gyro assembly computer shafts. This, in turn, restrains the movement of the gyros a proper amount in relation to the range to the target.

Aircraft Motion Information Flow

The aircraft motion information is received by the gyros in the elevation and deflection assemblies of the computer. These, in turn, precess a proportionate amount in response to the aircraft motion. They are restrained in the amount that they precess by the range information fed into their respective stiffness units. The movement of each is expressed as a rotation of their computer shafts. Within the gyros, the target motion information is combined with the range input, cross roll, and the gravity drop and trajectory shift corrections. The components of the prediction angle are computed by the gyros.

The deflection gyro assembly computes:

a. The deflection component of the lead for target motion.

b. The correction for cross roll error.

c. A deflection component for gravity drop while in a bank.

The elevation gyro assembly computes:

a. The elevation component of the lead for target motion.

b. The correction for trajectory shift.

c. An elevation correction for gravity drop resulting from the action of the gravity drop accelerometer.

Computed Prediction Flow

The amount the computer shafts rotate is detected by the pickoff units which deliver signals to the amplifier proportional to the amount of shaft rotation.

The elevation gyro pickoff delivers its signal to the elevation channel of the amplifier.

The deflection gyro pickoff delivers its signal to the deflection channel of the amplifier.

The elevation channel amplifies that signal and delivers it to the elevation torque motor in the sight head.

The deflection channel, amplifies its signal and delivers it to the deflection torque motor in the sight head.

The respective torque motors combine their information mechanically and position the prediction mirror with the correct prediction angle.

The torque motor pickoff units detect the amount of shaft movement resulting from their torque motor actions, and they relay their measurements to the proper amplifier channel. Within the elevation and deflection amplifier channels, the balancing out of inputs takes place, insuring proper positioning of the prediction mirror.

The optical system supplies the sight picture, collimates all the light rays, and reflects the image onto the prediction mirror.

Digitized by Google

The prediction mirror is offset from its neutral position by the action of the elevation and deflection torque motors. It is within this unit that the two components of prediction are combined into one prediction angle. From here, the sight picture is reflected up to the reflector plate presenting the sight picture and proper prediction angle requirement to the pilot.

The pilot must track the target for ⅔ *the time of flight* of the projectile for the sight to calculate the proper prediction requirement. The accuracy of the calculation depends upon the pilot's tracking ability. The better the tracking, the more accurate the prediction angle computed by the sight.

A-4 SIGHT RATE-OF-TURN CHECK

The A-4 gunsight rate-of-turn check described here is an in-flight check of the sight. In areas where maintenance facilities, personnel and test equipment are lacking, this check provides a simple and effective means of determining whether or not the sight is performing as it was designed to function.

The A-4 sight is much more complicated than the K-14 or the Mk. 18. The in-flight check, itself, may be compared to that performed with the older single-gyro sights. However, the calculations involved in determining the prediction angle requirement for a given set of conditions are much more complex.

Pilots performing the check should be selected with care as it requires proficiency in the aircraft and good technique in its employment. Even experienced pilots will have to practice making the check, to meet the prescribed conditions exactly.

Preparatory Step

1. Mount the optical sight tester on the sight head. This is a small unit which is normally part of the ground test equipment for the sight.
2. Turn the TR-HI-LO switch to the TR position.
3. Make sure that the pipper is located at the zero index of the optical sight tester. If it is not located there, make the proper adjustment. The zeroing-in of the pipper must be done with the sight electrically caged. The brightness of the indexes of the optical sight tester can be varied by a rheostat arrangement.
4. The range must be 1,200 feet while the check is being flown. There are several methods by which you may accomplish this.
   a. Have the sight mechanic set the range servo to read 1,200 feet and lock it there by pulling the fuse. The advantage of this method is that it releases your attention from maintaining the proper range, and allows you to concentrate on flying the check correctly.
   b. Set the throttle stop so that the minimum throttle position will give 1,200 feet of range. This is the next best method. You must hold the throttle against the stop during the flight check, but you are still relatively free to concentrate on the flight.
   c. The third method is merely to twist the throttle around to the 1200-foot mark and attempt to hold it there. This is the least accurate and requires more of your attention than either of the two above. For that reason, this method is not recommended, and should be used only as a last resort. The results using this method should not be considered conclusive evidence of the validity of the sight computations.

Flight Check

1. The basic requirement for an accurate "in-flight" check is to establish a given set of conditions prior to beginning the timing of the turn. These conditions must be held constant throughout the turn.
2. Climb the aircraft to 10,000 feet and select a horizon landmark which will be useful in noting the beginning and end of the 360° turn. Remember that this test is predicated upon your maintaining a constant rate of turn at the prescribed altitude of 10,000 feet and at an indicated airspeed of 350 m.p.h. or 304 knots. Power will have to be applied to maintain the desired airspeed during this turn, and you must keep the altitude constant.
3. Establish the conditions above and pull 45 mils lead as indicated by the optical sight tester prior to timing the turn. A stopwatch will be helpful. Begin the timing of the turn as the nose of the aircraft passes through the

Digitized by Google

check point, holding the 45 mils lead indication throughout the turn. Cease timing the turn when the nose of the aircraft once again passes through the check point.

4. The sight picture during the flight check should be as shown in the illustration below.

5. The turn should be completed in 60 seconds, and your job is to note the variance in time. Plus or minus 10 seconds is considered to be within tolerance.

> **Note:** These condition figures should result from the 45-mil lead: 62.6° bank, 2.18 *g*'s. These are for information only, and not for use during the turn.

6. The check should be valid in either a left or right hand turn.

Analysis of Results

If the sight prediction value of approximately 45 mils does not permit you to complete the timed turn within the 10-second tolerance period, the sight should be written up as giving an erroneous prediction angle.

If it takes longer than the allowable limit, 70 seconds, the sight is overleading.

If it takes less than the allowable limit, 50 seconds, then the sight is underleading.

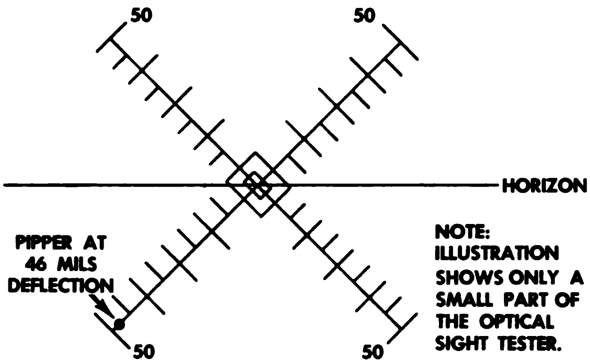

Sight Picture During Flight Check

A-SERIES SIGHT ROCKET FUNCTION

In recent years rockets have become increasingly important elements in aircraft armament. Although rockets are less accurate than guns, they provide increased striking power for fighter aircraft. For this reason an air-to-ground rocket computing system has been included in the A-series gunsights. The illustration below shows how the A-1 sight is operated as a rocketsight.

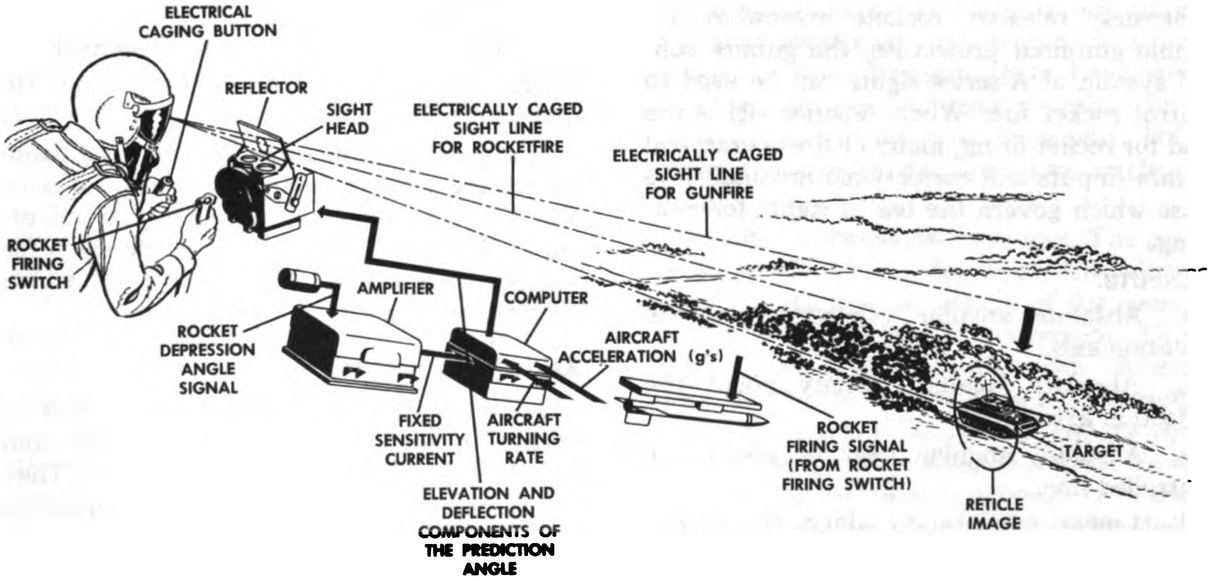

Operation of A-1 Gun-Bomb-Rocket Sight as a Rocket Sight

Digitized by Google

ROCKETFIRE

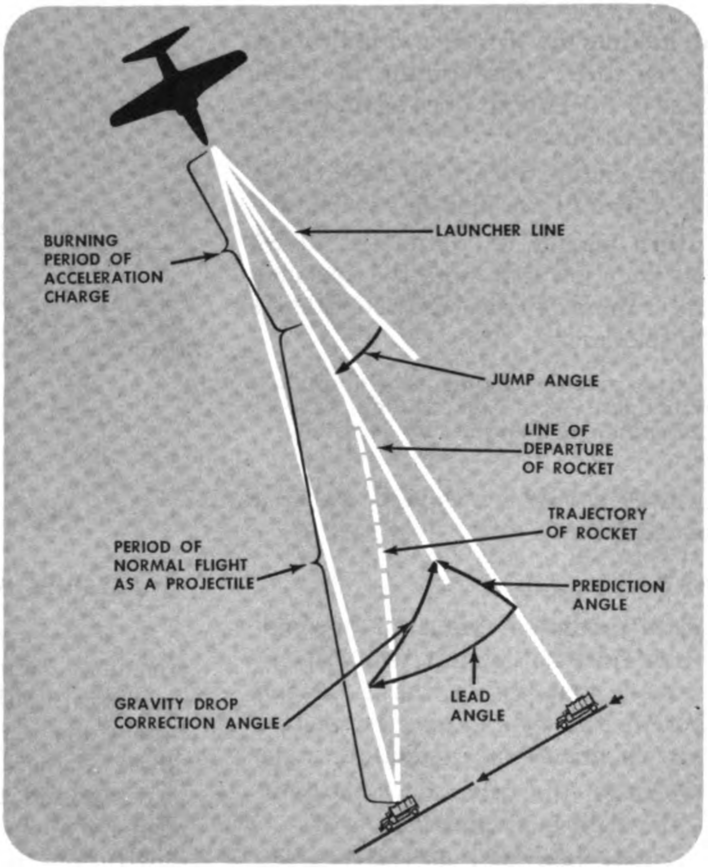

Operational Factors

Because released rockets somewhat resemble gun-fired projectiles, the gunfire control system of A-series sights can be used to control rocket fire. When A-series sights are used for rocket firing, many of the operational factors (inputs and corrections) are similar to those which govern the use of sights for gunfiring.

INPUTS.

a. Absolute angular velocity about the elevation axis.

b. Absolute angular velocity about the deflection axis.

c. Absolute angular velocity about the controlled line.

d. Linear acceleration along the deflection axis.

CORRECTIONS.

a. Gravity drop.

b. Target speed.

c. Wind velocity.

d. Air speed of the attacking aircraft.

e. Range.

f. Dive angle of the attacking aircraft.

The above-listed operational factors are diagrammed on this page.

However, certain corrections must be made within the sight to compensate for conditions which are peculiar to rocketfire. To understand the changes made within the sight for rockets, first consider the manner in which rocket fire differs from gunfire.

Rocket Characteristics

From the standpoint of fire control, rockets carried by aircraft are similar to bombs and also to the projectiles fired from guns. They are similar to bombs in that they commence their independent flight with approximately the same velocity as the aircraft from which they are launched. When a rocket is fired, a period of acceleration begins and continues until the propelling charge is burned out. During this period, the rocket can be considered

Digitized by Google

to be a projectile fired from an "equivalent gun" carried by the aircraft. Following the burning period, the rocket behaves like a projectile fired from a stationary gun with a muzzle velocity equal to the aircraft velocity plus the propellent-produced velocity.

The maximum velocity attained by an aircraft rocket is considerably less than the maximum velocity of a caliber .50 machine gun bullet. For example, a 5-inch HVAR (high velocity aircraft rocket) attains a velocity of approximately 1,350 feet per second. The muzzle velocity of a caliber .50 bullet is more than twice as great. Thus, over a given range, the rocket's time of flight will be much greater than that of a bullet.

The fins of the rocket and the fact that it leaves the aircraft at nearly the same speed of the aircraft cause the rocket to aline itself more closely with the flight path of the aircraft than do bullets.

These factors, especially the slower velocity of the rocket, indicate that over a given range of fire, greater corrections are needed for all the elements of the lead problem than in gunfire. Gravity drop, lead for target motion (a moving target on the ground, or a wind condition), and trajectory shift (F-factor) will all need to be greater than for bullets.

Moreover, the velocities and trajectories of the different rockets will vary and must be corrected for in the computed prediction angle.

Corrections for Rocket Characteristics

The following corrections have been incorporated in the A-1 and the A-4 gunsights to compensate for the rocket characteristics.

ROCKET SENSITIVITY NETWORK. To compensate for the decreased velocity of rockets, and obtain greater corrections for all the lead elements, the restraint applied to the gyro movement must be decreased. A decrease in the stiffness applied to each gyro will provide larger corrections in response to aircraft motion. The rocket sensitivity network does just that.

When the rocket system is engaged, normal range information is cut off between the air density unit and the sensitivity channel. The sensitivity network transmits a fixed current into the sensitivity channel for the type rocket selected. That current is transmitted to the stiffness units of the gyro assemblies.

In air-to-ground work all rockets are; fired at approximately the same ranges (between 3,000 and 5,000 feet). It has been determined that the desired accuracy may be obtained merely by supplying an average range stiffness to the gyros. The sensitivity network supplies that average range signal. Changes in range will not affect this current.

In composition, the sensitivity network consists of a group of resistors to which a fixed voltage is applied. Each resistor corresponds to a particular rocket.

When a rocket is selected, the fixed current is channeled through the resistor designed for that rocket. The current that is remaining after passing through the resistor is transmitted on to the stiffness units of the gyros. This will apply the proper restraint to the gyro movement and allow the gyros to compute the proper prediction for the rocket selected.

The size of the resistor varies for different rockets. The slow rockets have large resistors that permit a smaller current to reach the gyro stiffness units. The restraint applied will then be small and the gyros will compute a greater prediction angle requirement for the slower rockets. Faster rockets have smaller resistors that permit larger restraint currents to be applied to the gyro movement. This reduces the size of the prediction angle computed.

ROCKET DEPRESSION NETWORK. The gravity drop accelerometer depresses the elevation gyro considerably as a result of the decreased restraint applied to gyro movement. This results in an added gravity drop correction. The gravity drop accelerometer, however, is calibrated for gunfire, and its gravity correction will be insufficient for rocketfire. To make the gravity correction accurate it becomes necessary to provide added lead by depressing the prediction mirror an amount appropriate for each particular rocket and dive angle selected. The rocket depression network of resistors supplies this correction.

The rocket depression network is a system

Digitized by Google

of resistors to which a fixed voltage is applied. It contains two resistors for each type rocket that can be selected. One is for a steep dive angle depression, and the other is for a normal dive angle depression. After a study of the effects of gravity on a rocket trajectory, it was apparent that more lead for gravity was required in a normal dive than in a steep dive. Consequently, the steep dive setting will always result in less depression than the normal setting.

The output of each resistor is applied to the elevation torque motor pickoff current returning to the elevation amplifier channel. This addition to the pickoff signal results in repositioning the prediction mirror with the required depression for the rocket, range and dive angle selected.

The depression supplied by the depression network is that selected for a particular range. (The exact ranges will be given later.) In order for it to be accurate, a pilot must fire his rockets at very nearly that range. Varying the firing range considerably from the one selected will result in either overhsooting or undershooting the target slightly.

Both the rocket sensitivity network of resistors and the depression network of resistors are components of the sight selector units. In the A-1 that unit is referred to as the rocket selector unit, in the A-4 it is called the sight selector unit. These selector units are discussed later in this section.

Flow of Information

The various sight selector units contain the rocket sensitivity network and the rocket depression network. The networks are shown in the illustration on the next page.

When a rocket selection is made, the following changes occur.

a. The range servo input to the sensitivity channel is disconnected between the air density unit and the sensitivity channel. Since all air-to-ground work is accomplished within a small range of altitude, air density corrections are unnecessary. At the same time, the rocket sensitivity network of resistors transmits a fixed voltage to the sensitivity amplifier for the type rocket selected. This signal is then delivered to the stiffness units of the gyro assemblies.

b. The rocket depression network depresses the prediction mirror by sending a signal up to join the signal coming from the pickoff of the elevation torque motor. The two signals are combined and delivered to the elevation channel, which in turn sends a corrective impulse to the elevation torque motor resulting in a depression of the mirror for gravity drop.

Range information may be fed into the range servo and up to the air density unit, but it can progress no farther into the computing system of the sight. Range information will also be transmitted into the range channel and on over to the sight head where it will result in repositioning the range dial and varying the reticle size. This particular channel is not interrupted in the changeover to a rocket sight; however, this information cannot affect the computing of the sight. If anything, the constant changing of the reticle size as the radar locks on and off the ground, constitutes an annoyance to the pilot. The pilot can prevent this action of the reticle, if he desires, merely by twisting the throttle twist grip out of detent and holding it in one constant position. That cuts the radar out of the system and gives control over the reticle size to the manual twist grip.

The current from the rocket sensitivity network constitutes the range information that is fed into the sight computer. It passes through the sensitivity channel where it is amplified, and on over to the stiffness units of the elevation and deflection gyro assemblies. Here, it applies proper restraint to the movement of the gyros.

Target motion information is fed into the gyros as a force resulting from the turning motion of the attacking aircraft as it tracks the target. Within the gyros the range information and target motion information are combined and generated into a deflection component and elevation component of the prediction angle. These components contain the elements of lead for target motion, gravity drop (partial correction), trajectory shift, and cross roll correction.

The gyro pickoff units deliver the combined prediction calculation to the elevation and deflection channels of the amplifier.

Digitized by Google

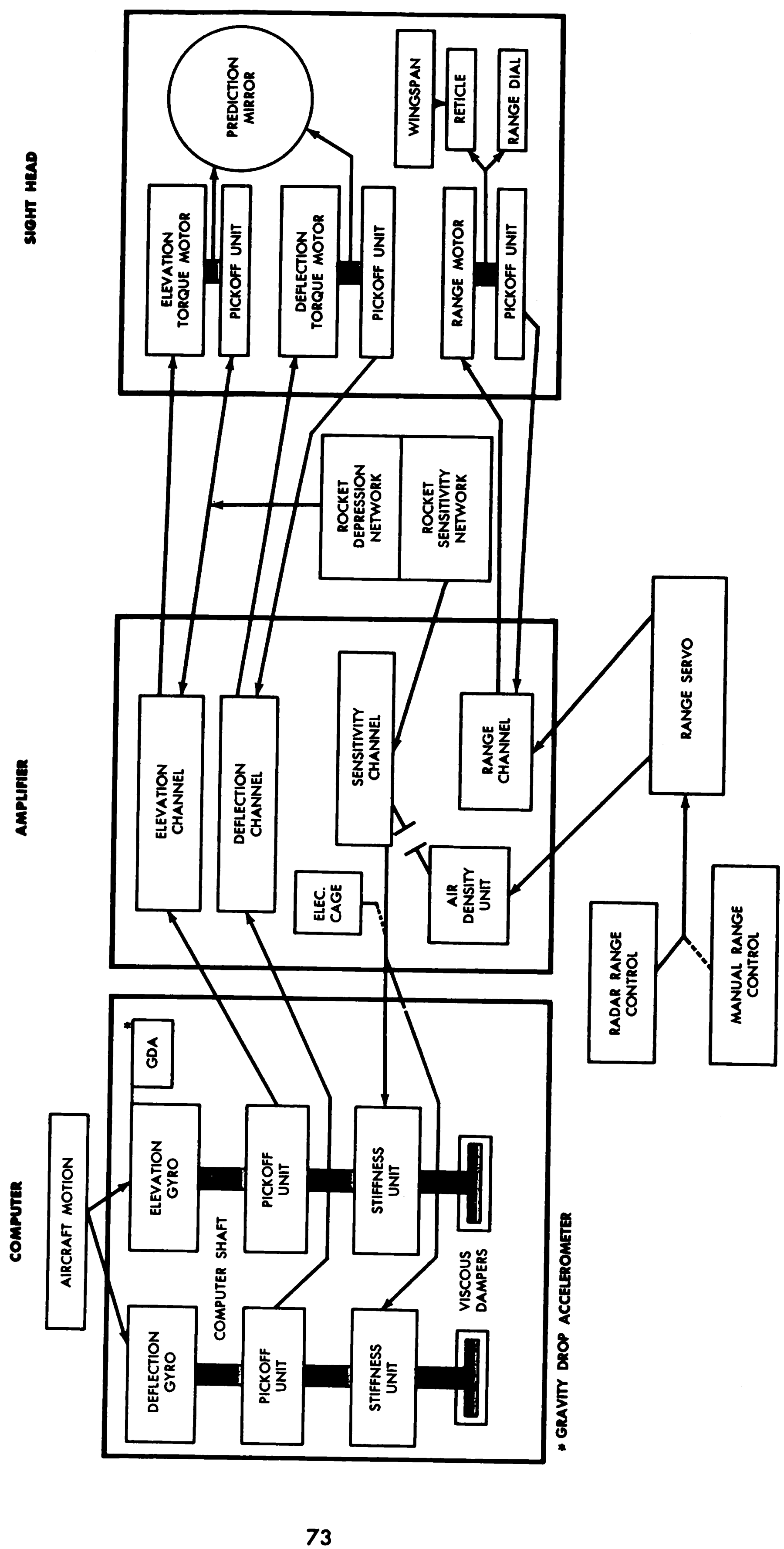

* GRAVITY DROP ACCELEROMETER

Rocket Function Information Flow

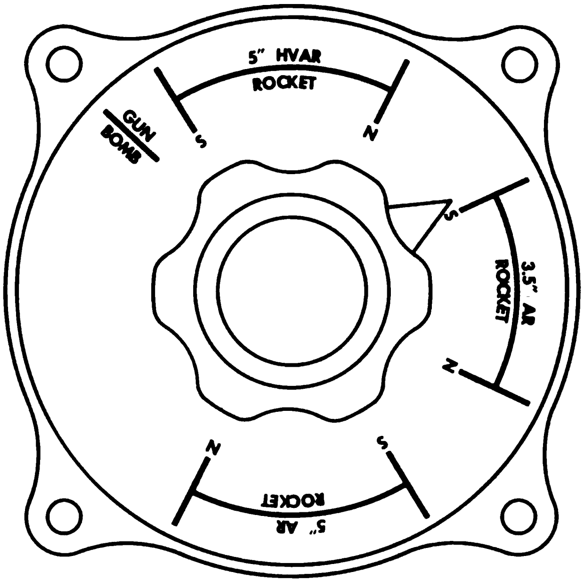

Rocket Selector Unit A-1 Sight

The information is amplified within the amplifier channels and is delivered to the elevation and deflection torque motors within the sight head. These combine their actions into the positioning of the prediction mirror.

The prediction mirror is held in a constant depression by the action of the depression network. The amount of the depression is that addition required to supplement the gravity drop accelerometer correction, and to give an accurate gravity correction to the pilot. The signals from the torque motors further reposition the prediction mirror, adding to its position the computed elements of the prediction requirement. From here, the reticle image is reflected on to the reflector plate presenting to the pilot the required prediction angle to hit the target.

Rocket Selector Unit in A-1 Sight

The rocket selector unit in the A-1 sight is shown in the illustration above.

Whenever the sight is used in the gun or bomb functions, the rocket setting unit pointer is placed on the *gun-bomb* position.

When rockets are to be fired, the pointer must be moved to the position indicated for the type rocket being fired, and for the type of diving pass that will be used on the firing run.

On the selector, "S" stands for steep dive angle and is any dive angle from 40° to 60° with 50° considered the average steep dive. "N" stands for normal dive angle and is any dive angle from 0° to 40°, with 28° considered the average normal dive.

For each position selected, one of a set of resistors puts in a constant stiffness voltage to the gyro assemblies. This voltage will be correct for the type rocket selected.

At the same time, the rocket depression system in the unit depresses the prediction mirror the proper amount for the rocket selected.

Selecting a rocket position results in disconnecting the normal range servo information and the air density information from the sensitivity channel of the amplifier. The range information flow through the range channel is still complete to the reticle and range dial; consequently, the radar or manual ranging will still vary the reticle size and dial setting. This has no effect on the computing, however.

The sensitivity furnished to the computer and the additional depression input are based on a predetermined range for firing. Because the radar system cannot pick out specific targets against ground return, radar information and correct varying range information is not available for rocket computation. The A-1 operates with a fixed range setting chosen to provide optimum aiming at a range of 4,500 feet for all its rockets. The range input is relatively uncritical to the rocketfire computation and thus will provide the desired impact accuracy from about 4,800 feet into the breakaway point.

The depression amounts (below zero prediction sight line) for the various rocket settings in the A-1 are as follows:

Setting	*Mils*
5" HVAR, S	42
5" HVAR, N	51
3.5" AR, S	54
3.5" AR, N	68
5" AR, S	87
5" AR, N	110

NOTE: On later model rocket selector units, the obsolete 3.5" AR has been replaced by the 2.25" SCAR. The depression amounts for both the S and N positions remain the same.

Digitized by Google

The depressions above will differ when the electrical cage button is depressed. The electrical cage causes a high gunfire stiffness to flow to the gyro assemblies. The resulting high stiffness applied to the elevation gyro will overcome the effect of the gravity drop accelerometer, raising it and decreasing the gravity correction applied to the elevation gyro. Therefore, while in electrical cage, the sight will not compute as a rocket sight since gunfire stiffness is applied to the gyros, and the depression will not be accurate for the calibrated range. When in electrical cage the following number of mils are subtracted from the total depression:

5″ HVAR, S & N, 21 mils
2.25″ SCAR or 3.5″ AR, S & N, 21 mils
5″ AR, S & N, 28 mils

After the caged button is released, the gravity drop accelerometer takes a few seconds to depress the gyro down to the proper depression for rocketfire (approximately 5 seconds for the A-1 rockets.) After it is fully depressed, the pilot must track the target an additional 3 seconds to insure that the prediction angle is accurate.

In any discussion of depression amounts, it is necessary to have a known reference. The statement "20 mils depression," means nothing. Depression must be related to a known reference. For example, "20 mils depression from fuselage reference line" makes clear the relationship of that amount to the rest of the gunfire references. It is important to know that the rocket depressions given above are the amounts the pipper will depress below zero prediction sight line. Zero prediction sight line is the one that is used in harmonization. It is the sight line that would exist at zero range and no angular velocity. But this condition can merely be approached with the A-series sights; therefore, the 600-foot range condition is normally considered the zero prediction sight line. In the A-1 the electrical cage is used for obtaining this reference; in the A-4 the range drum must be placed at its 600-foot range mark. The rocket depressions are the amount the pipper will fall below the zero prediction sight line, that is, the 600-foot range sight line.

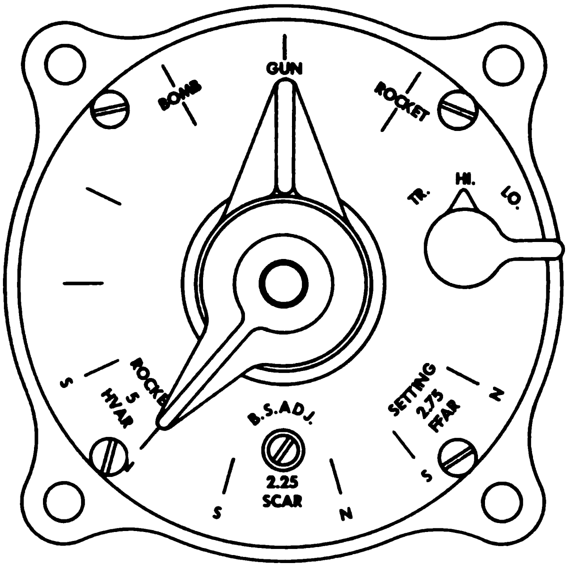

Nonvariable Scale Sight Selector Unit, A-4 Sight

It is possible to vary the depression amounts set into the A-1 units to fit the needs of particular organizations by positioning the boresight adjustment. But it is impossible to vary the depression of only one setting, leaving the others unchanged. If one is changed 20 mils, for example, all the others will reflect the 20-mil change also. The amounts between the various selections will remain constant. Therefore, to change the depression of one selection a desired amount, it is only necessary to vary the first selection the desired number of mils.

Selector Units in A-4 Sights

Two types of selector units are used in A-4 sights. They are described in the paragraphs which follow.

The *nonvariable scale sight selector unit* is shown in the illustration above.

The sight function pointer should be positioned according to the function in which the sight is going to be used. Selection of one position inactivates the other functions of the sight.

The train-high-low switch is used only during the gun function.

The inner workings of the rocket section of the A-4 selector unit are similar to those in the A-1. This section contains a rocket depression system and a rocket sensitivity resistors unit. These units operate in the same way and

Digitized by Google

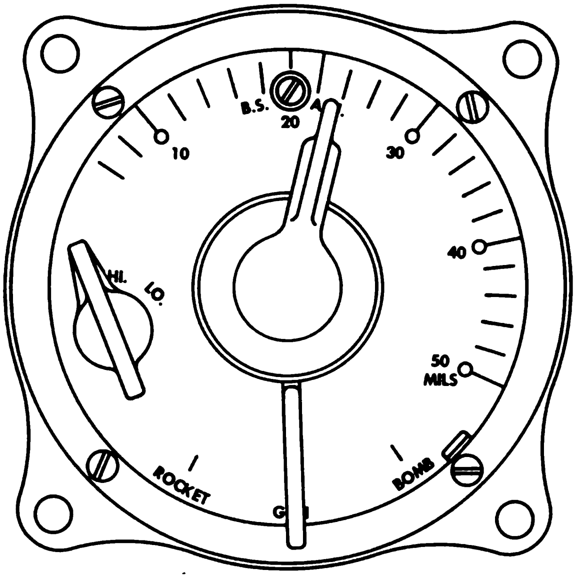

Variable Scale Sight-Selector Unit

accomplish the same purpose as the corresponding units in the A-1.

The depression amounts in the A-4 selector unit are listed below. They are the depressions below zero prediction sight line.

Setting	*Mils*
2.75″ FFAR, N	22
2.25″ FFAR, S	13
2.25″ SCAR, N	68
2.25″ SCAR, S	54
5″ HVAR, N	51
5″ HVAR, S	42

As in the A-1 rocket system, the electrical cage will take out a part of the gravity correction supplied by the gravity drop accelerometer as indicated below:

2.75″ FFAR, S & N, 8 mils
2.25″ SCAR, S & N, 15 mils
5″ HVAR, S & N, 14 mils

After the electrical cage is released, the gravity drop accelerometer takes 2 to 5 seconds to reposition the elevation gyro with the desired depression. After the pipper is once again fully depressed, the pilot must track his target an additional 3 seconds for his prediction angle to be accurate.

The S and N positions for each setting are designed for type of dive angle desired. The limits for the two are the same as for the A-1.

The range and airspeed conditions are as follows:

	Airspeed (knots)	Range (feet)
2.75″ FFAR	400	4,200
2.25″ SCAR	350	3,000
5″ HVAR	400	4,800

It is possible to change the amounts of depression set into the selector by twisting the B. S. Adj. (boresight adjustment) screw on the face of the selector unit. In this unit as in the A-1, the amounts between the various settings will remain constant. If one is changed by a given amount, the others will also reflect that change.

The *variable scale sight selector* unit was designed for the A-4 to allow the pilot to select varying amounts of depression to fit a particular firing condition. This unit provides more versatility for the rocket function. The unit is shown in the illustration to the left.

The guns, bombs, and rockets selector and the TR-HI-LO switch serve the same purposes in this unit as in the one previously discussed.

Only one sensitivity resistor is contained within the unit. Rather than providing proper stiffness for all rockets, it provides an average sensitivity that will suffice for all rockets used.

The variable scale is numbered in increments of two, from 6 to 50, and the pilot may select the depression he desires by positioning the pointer. The scale may be used for different dive angles and for varying ranges. The pilot merely positions the pointer to obtain the proper depression for the desired firing range and dive angle.

The position of the variable scale pointer indicates the amount of depression supplied while the electrical cage button is depressed. For instance, if the pointer is placed on 20, the selector unit will provide 20 mils of depression while the electrical cage is depressed. When the electrical cage is released, the pipper will depress an additional 4 mils to give a total of 24 mils with the pointer still at 20.

The selector unit scale may be boresighted in any desired manner. The B. S. Adjustment screw on the face of the unit permits the scale

Digitized by Google

to be positioned as desired to satisfy the particular needs of different organizations. After the selector unit scale is properly harmonized, the pilot can refer to the proper rocket depression tables and obtain the correct scale setting for his particular type of rocket, dive angle, range, and airspeed at the time of firing. The next step is to position the pointer to the proper setting, and the pilot is ready to fire.

After maneuvering onto final approach, the pilot must release the electrical cage to obtain the computing action of the sight. It takes approximately 1 second for the added 4-mil gravity correction to be achieved. After that, the pilot must track the target carefully until he fires, to insure that the lead prediction is accurate.

Shortcomings of Rocket System

Whenever one sighting unit is used to compute the lead requirement for several different *types* of projectiles, it will have a few shortcomings for some of those projectiles. The shortcomings of the rocket system are as follows:

a. Because of the low stiffness of the rocket system, it is essential that the pilot always hold the electrical cage button down while he is maneuvering onto the final approach for firing. Otherwise, the reticle will likely disappear from his field of vision. When the electrical cage is released, it takes 1 to 5 seconds for the gravity drop accelerometer to depress the pipper down to its proper position. After that, the pilot must track the target for an additional 3 seconds before he is assured that his sight is giving an accurate prediction. That brings the total time required, after he is on final approach and the electrical cage is released, to a minimum of 4 seconds and a maximum of 8 seconds before firing.

> NOTE: It is possible to reduce this time by giving a sharp tug on the stick, putting positive *g*'s on the aircraft. This causes the gravity drop accelerometer to depress the pipper down to its proper position in much less than the maximum of 5 seconds. This corrective measure makes the time element less of a disadvantage. However, the pilot must still track the target for 3 seconds afterward.

b. The roll error in rocket function is a great deal more pronounced than it is in gunfire function. Again this is a result of the decreased stiffness on the gyros. This adds to the difficulty in tracking. The slightest movement of the wings will result in an abrupt correction for roll. This makes it extremely difficult for the pilot to tell if he is actually tracking the target properly during his final approach.

A-SERIES SIGHT BOMBING FUNCTION

In the development of the A-series gunsights it was felt that an automatic computing system for the bomb release point would be of great value to the pilot. The system was designed primarily to decrease the hazard of bombing by increasing the altitude at which pilots could bomb accurately.

Principles of Operation

The bombing system is designed to give the pilot an automatic release of his bombs when he has directed his aircraft to a tangent position of the bomb trajectory by tracking the target. If the pilot tracks the target with the sight depressed, he will at some point in his pass intercept a tangent position to the bomb trajectory, and that will be the proper drop point for his particular conditions of airspeed and altitude.

The operational factors of the A-series sights in the bombsight function are shown in the diagram on the following page and are listed below.

INPUTS.

a. Absolute angular velocity of the aircraft about the elevation axis.

b. Absolute angular position of the aircraft about the deflection axis.

c. Linear acceleration along the deflection axis.

d. Components of gravitational acceleration along the deflection axis.

e. Indicated air speed.

CORRECTIONS.

a. Gravity drop.
b. Target speed.
c. Wind.
d. Air speed of the attacking aircraft.
e. Dive angle of the attacking aircraft.
f. Range.
g. Trail.

Digitized by Google

BOMBING

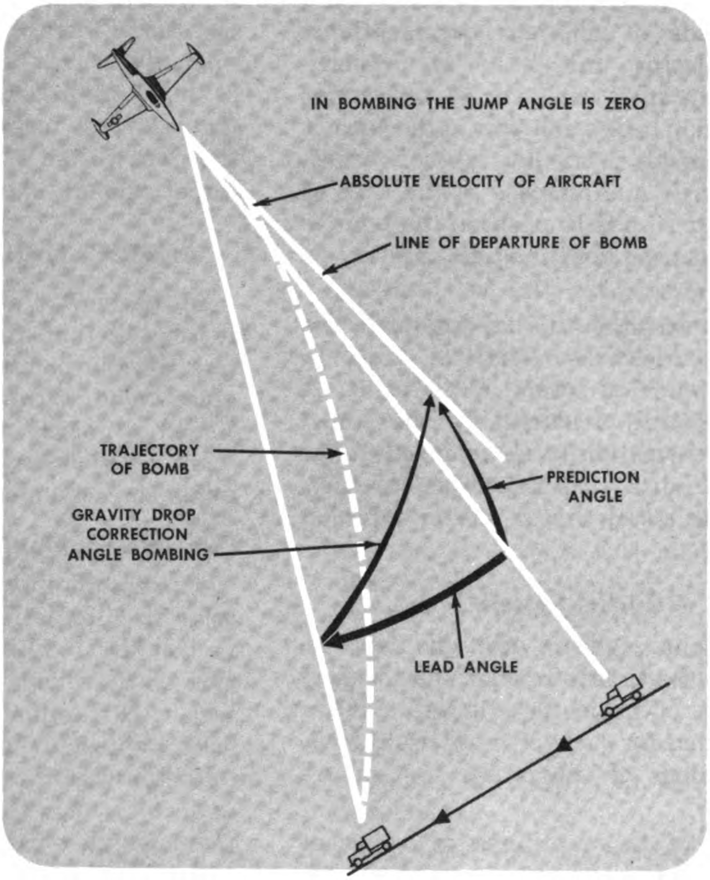

The sight is calibrated and corrects for the trail effect of the types of bombs normally used. Corrections for minor variations in trail, caused by bombs other than those normally used, can be made by a proper change in the bomb-target-wind adjustment (BTW scale).

No correction is made for cross trail, since this effect is small in the type of fire control problems to which A-series sights are applied.

When the A-1 sight is used, attacks are made with the velocity vector of the aircraft pointed very nearly toward the target, which accounts for a low cross component of the relative wind. Furthermore, because of high speed with expected dives of 30° or more, the projectile is in flight for a much shorter time than in level bombing at the same range. This reduced time of flight leaves a shorter period for the wind to effect the trajectory of the bomb. There is some cross-trail effect but it is negligible.

The wind correction is complete only if the proper setting for the relative velocity of the wind with respect to the target is properly made with the BTW scale.

As indicated in the illustration of the operation of the A-1 sight on the next page, both this sight and the A-4 model have airspeed and wind corrections built into the bombing portion. These corrections are utilized so as to give the pilot an automatic drop point when approximately a ½ *g* force is applied to the aircraft. Due to the corrections within the sight, if the pilot tracks the target correctly, he will always encounter the tangent position to the bomb trajectory at the same time that his aircraft reaches the ½ *g* condition.

NOTE: There is a plus 1 *g* force on the aircraft while flying straight and level. As the *g* forces are decreased, the aircraft first passes through a plus ½ *g* force condition, then a zero *g* force condition, and then to the negative *g* conditions. The plus ½ *g* condition is the one dealt with here.

Digitized by Google

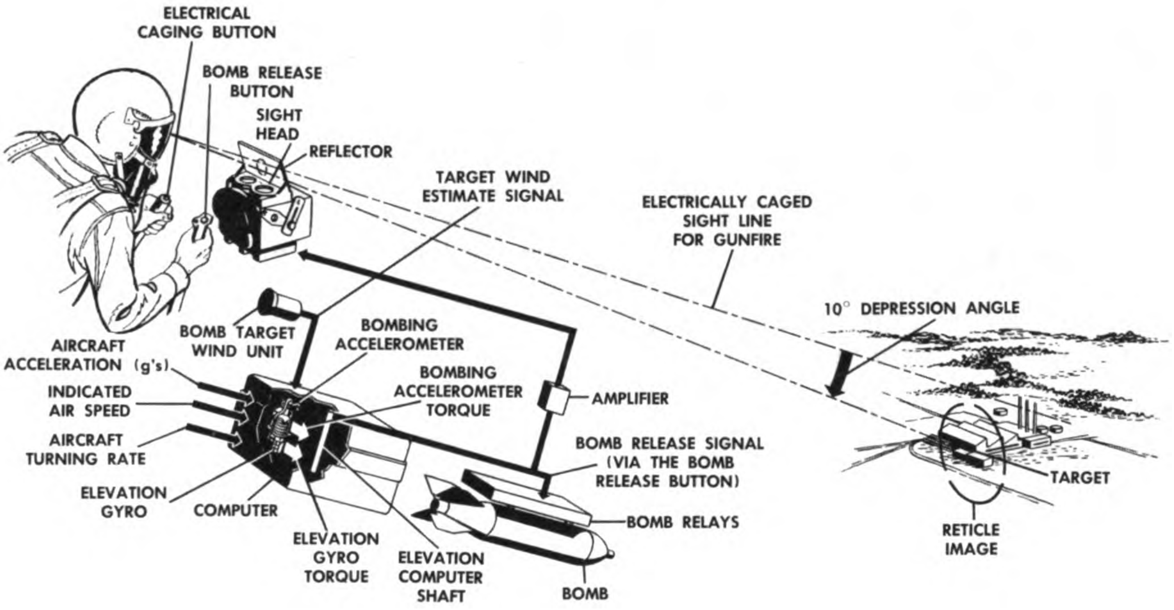

Operation of A-1 Gun-Bomb-Rocket Sight as a Bombsight

Bomb Drop Assembly

The bomb drop assembly is located in the computer section of the gunsight. It is inactive at all times except when the sight is set up in bombing function. A schematic drawing of the bombing assembly is shown below.

When the sight is put into bombing function, the ball at the end of the moment arm engages the gymbal of the elevation gyro to precess the gyro to its full stop. When the proper conditions exist, at approximately ½ g force, the forces of the bias spring and of the gyro attempting to precess in response to the

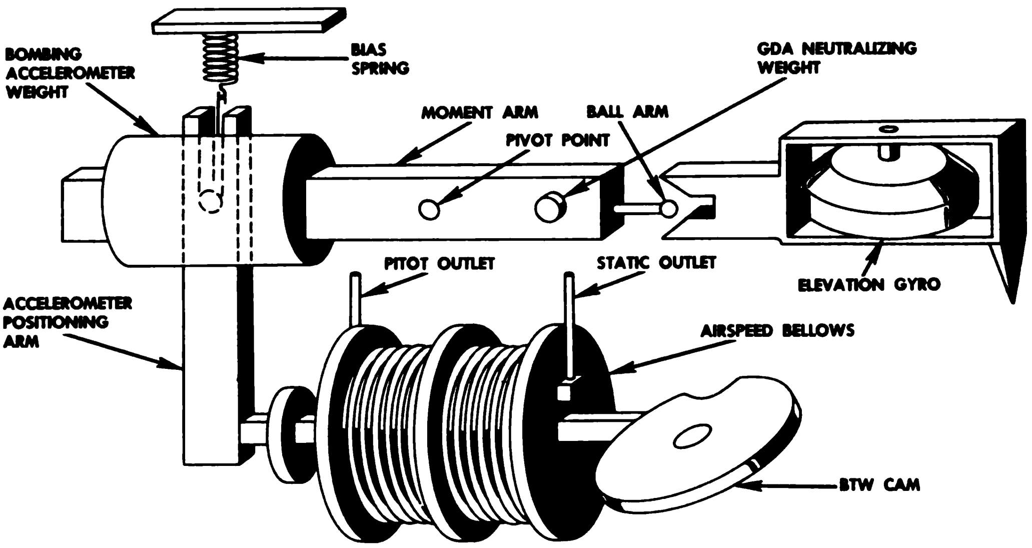

Bombing Assembly

Digitized by Google

aircraft turning rate overcome the torque applied by the bomb drop accelerometer, and allow the elevation gyro to right itself. At that time, the bomb shackles are opened and the bombs are released, if the bomb switch is on AUTO and the bomb button depressed.

The airspeed bellows is connected to the pitot-static system of the aircraft. It measures true airspeed. As it expands or contracts it mechanically repositions the bomb drop accelerometer on the moment arm, thereby varying the force required to raise the weight. By so doing, it corrects for airspeed. This varies the moment of the weight on the moment arm, thereby requiring slightly more or slightly less than a ½ *g* condition for the bomb drop point. This results in varying the drop point in accordance with true airspeed.

In the A-1 sight, the bomb-target-wind (BTW) scale must be turned out of the GUN-ROCKET position to activate the bombing system in the computer. In the A-4, the bomb system is engaged by placing the pointer of the selector unit to BOMBS. The BTW scale is used only for wind corrections.

The BTW scale makes corrections for either tail wind or head wind. The deflection gyro assembly corrects for cross wind. The pilot locates the pointer of the bomb target wind scale to correct for the wind that exists about the target. If he doesn't know the wind, he places the pointer at its zero position. The bomb target wind scale rotates a cam that manually moves the entire airspeed bellows. This in turn repositions the bomb drop accelerometer on the moment arm correcting for ground wind. This again varies the drop point about the ½ *g* condition. It will cause the bomb to be released later for head wind, and earlier for tail wind.

A small calibrated weight (GEA neutralizing weight) located on the moment arm neutralizes the effects of the gravity drop accelerometer on the elevation gyro assembly.

The manual-automatic switch on the armament panel controls the method of releasing the bomb. With the switch on AUTO, the pilot may depress his bomb button at the beginning of his bomb run and continue to hold it throughout the pass. When the proper release point is reached, the bombs will drop automatically. At the time of release, in the A-1 sight, the reticle light source is extinguished and a "bombs away" red flasher light will be reflected onto the reflector plate. In the A-4, only the reticle is extinguished. These signals are meant to inform the pilot that the bombs have been released. With the switch in MANUAL, the pilot must wait until the sight indicates the proper drop point by the disappearance of the reticle and the appearance of the red flasher light. At that time he depresses the bomb release button to drop the bombs.

Flow of Information

The flow of information during the bombing function is shown on the following page.

The bombing system is engaged in the A-4 by moving the sight function pointer on the selector unit to BOMB. In the A-1, it is engaged by moving the pointer of the bomb-target-wind scale out of the GUN and ROCKET positions.

Five relays are activated when the bombing system is engaged.

a. One of the relays cuts off all range information to the computer by removing the power to the stiffness units. This means that there is no stiffness at all to gyro movement. At the same time, the relay shorts out three-fourths of the coils of the elevation gyro stiffness unit so that when the electrical cage is engaged, the stiffness unit will not tend to move the gyro away from its stop.

b. Another relay grounds out one section of the coils of the elevation torque motor. This causes the torque motor to be driven against its stop, which depresses the prediction mirror at its full down position of 10°, that is 177 mils depression. This relay also disables the reticle dimensioning and range dial positioning system by disrupting the flow of information from the range channel to the range motor.

c. A third relay channels the outputs of the elevation torque motor pickoff and the elevation gyro pickoff through the elevation amplifier and to the differential relay.

d. The differential relay has the characteristic that it will remain open as long as the current on both sides of it is equal. When

Digitized by Google

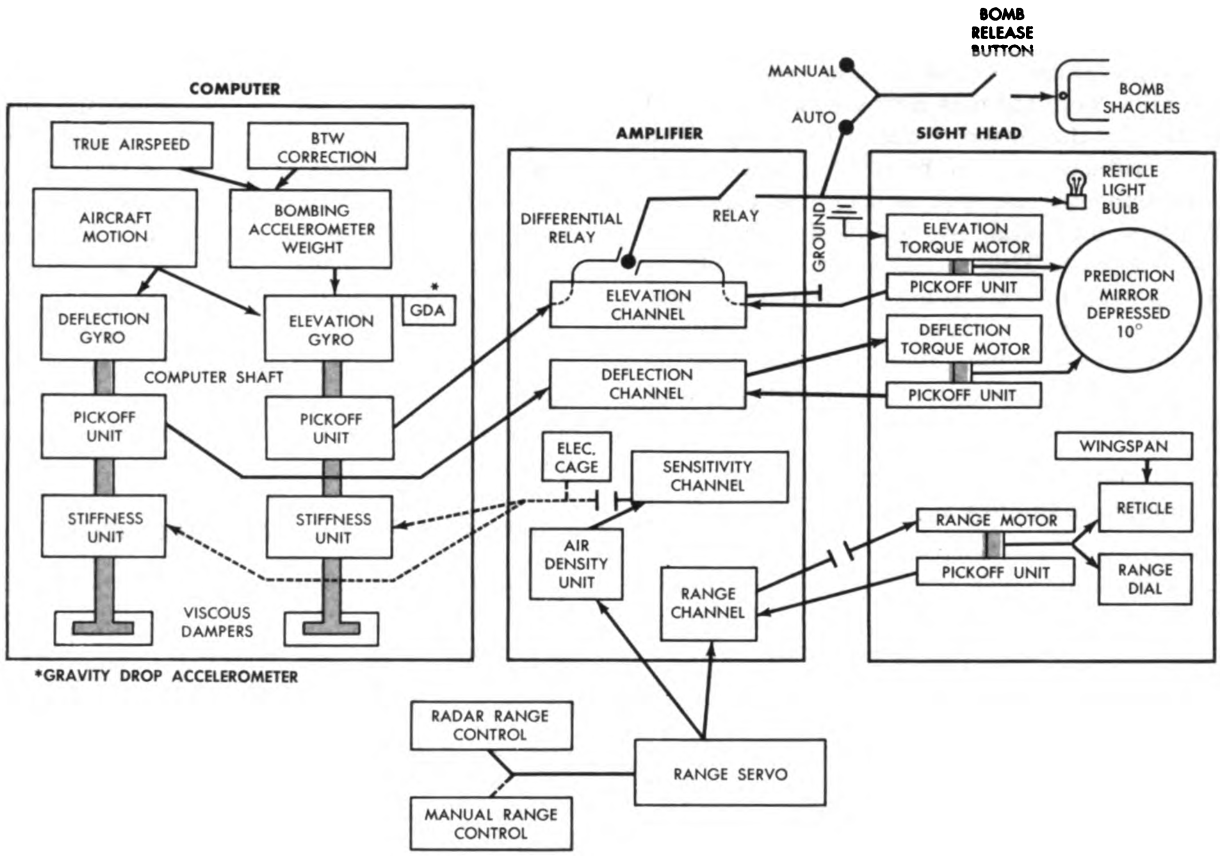

Bombing Function Information Flow

the current on one side of it changes, the relay will close and activate a fifth relay within the sight.

e. In the A-1, the fifth relay extinguishes the reticle circle image and activates the red flasher, while in the A-4 it only extinguishes the reticle picture. It also activates the armament relay that opens the bomb shackles to release the bombs.

The bomb drop accelerometer is made to engage the elevation gyro gymbal when the sight is put into the bomb function. It forces the gyro to precess to its full stop. The precession of the gyro results in the gyro pickoff unit transmitting a fixed signal to the elevation amplifier. Here it is channeled out to the differential relay. The elevation gyro and the prediction mirror have been adjusted so that when they are both against their bomb stops, the signals from their respective pickoff units are equal. Since both lead to the differential relay, as long as their currents are equal, that relay will remain open. As the aircraft reaches the $\frac{1}{2}$ g condition, the forces of gyro precession and the bias spring overcome the torque of the bomb drop accelerometer weight, allowing the gyro to right itself. This changes the signal coming from the elevation gyro pickoff. At that instant, the signals to the differential relay are no longer equal. That relay closes and then activates the relays that extinguish the reticle, turn on the red flasher, and open the bomb shackles to drop the bombs.

The bomb shackles will open automatically only if the pilot has the bomb release button on the control stick depressed and the manual-auto switch to AUTO.

Digitized by Google

Engaging the electrical cage button will cause a high stiffness current to flow into the computer. When the sight is put into bombing function, three-fourths of the coils of the elevation gyro stiffness unit are cut out of the system by the action of one of the relays. The high stiffness applied by the electrical cage goes only to one coil within the elevation stiffness unit and to all of the deflection stiffness unit. This has the effect of holding the elevation gyro against its stop. Therefore, it is impossible to obtain a proper automatic bomb release while the electrical cage is depressed. The deflection gyro is restrained in its movement normally by the electrical cage.

Disadvantage of Automatic Bombing System

Turbulent air or rough handling of the controls could result in a ½ g condition on the aircraft before reaching the proper drop point. This could result in a premature bomb drop. It is possible to correct for this disadvantage by the following methods:

a. The electrical cage button can be depressed during the first part of the bomb run. With this method, the pilot must learn to estimate his release point and release the electrical cage just before he reaches his bomb drop point. This requires considerable practice.

b. During automatic functioning of the sight, instead of holding the bomb button depressed throughout the complete bomb run, the pilot can wait until the reticle disappears before depressing the button.

c. The sight may be used with the armament switch in the MANUAL position. It will do all of the normal computing except drop the bombs automatically. In this case, the pilot drops the bombs by depressing the bomb release button when the reticle disappears. This is the most popular method of using the bombing system.

With no stiffness applied to gyro movement, it is extremely difficult to track the target and make proper corrections throughout the pass.

Checks on Proper Operation

When the system is first engaged, the mirror is depressed immediately 177 mils, and its pickoff sends the proper signal out to the differential relay. It takes a while, however, for the gyro to depress to its stop. Until the gyro is fully depressed, the signals to the differential relay will be unequal and the relay will close. This will extinguish the reticle. It will reappear later as the gyro reaches its proper stop and the differential relay opens. This is the first check that the system is adjusted accurately and will probably operate correctly.

The pilot may test the operation of the system by applying a ½ g force to his aircraft without the bomb button depressed. If the reticle disappears, it will indicate the proper operation of the system.

COMPARISON OF A-SERIES SIGHTS

Basically, the A-4 is a dressed up version of the A-1. The only change made in the various *functions* of the sight is the inclusion of a range rate tachometer for calculating future range information and a target speed selector in the gunfire function, that is, the TR-HI-LO switch. The A-4 sight and its controls, however, appear quite different from the older A-1.

The following is a summary of the differences of the A-4 from the A-1.

Sight Head Differences

A diamond-type reticle consisting of 10 diamonds replaces the continuous circle used in the A-1. This gives much better illumination of the reticle.

The A-4 utilizes one light bulb as compared to two in the A-1. The light bulb still has a primary and secondary filament.

The range dial and the wingspan control are repositioned on the A-4 sight head.

The manual caging system was redesigned. The manually caged position in the A-4 is the reverse of that in the A-1; mechanically caged is inboard in the A-1, and outboard in the A-4.

The manual cage reticle in the A-1 is always a 100-mil circle. In the A-4 it will vary in size. The caged position of the A-4 results in the range dial being positioned at the 600-foot range; therefore, the size of the reticle is dependent upon the setting of the wingspan

Digitized by Google

control. Fifty mils is the minimum reticle size with a span setting of 30 feet. A span setting of 60 feet will give a 100-mil reticle. A span setting of 90 feet provides the largest reticle size (150 mils) in mechanically caged position. Increasing the span setting past 90 feet will result in no further increase in reticle size.

The radar lock-on light was repositioned. On the A-4 the light will always be on the sight head in the same place regardless of type of aircraft. The A-1 lock-on light was in various places throughout the cockpits of the different aircraft in which it was installed.

Selector Unit

The selector unit in the A-4 replaces the old rocket selector unit in the A-1. This could be called the central control of the sight, since it is used for the selection of any of the three functions of the sight. The sight still has the rocket setting section and the BTW switch as in the A-1; however, the position of these controls does not affect the operation of the sight until the central control of selector unit has been positioned to the desired function (GUN, BOMB, or ROCKET). This system of sight control is advantageous in that if both rockets and bombs are being carried, the rocket selector section and the BTW scale can both be positioned at the pilot's convenience, keeping the sight in the gunfire function until the pilot selects either the bomb or rocket function by a flick of the central selector.

A means of quick return to gunfire function has been added to the A-4. When the sight is in either the rocket or bomb function, the pilot may return the sight to the gunfire function merely by depressing the target selector button on the stick grip. The pilot should always use this method of returning the switch to GUN, to avoid damaging the unit.

In the rocket selections, a change was made by deleting the extinct 5″ AR and 3-5″ AR positions, and the addition of the 2.75″ FFAR and 2.25″ SCAR positions.

TR-HI-LO Selector

When using the gunfire function of the A-4 sight, the pilot can select the target to fighter speed ratio which is applicable to the situation. The exact conditions were discussed earlier, but in brief they are as follows:

TR 300 — 205
HI 600 — 511
LO 600 — 205

Range Rate Tachometer

This unit fits into the range servo system of the A-4 and provides a means whereby the sight can calculate the future range of the target and feed that information to the computer for more accurate prediction of lead angles. The A-1 had no such corrector, although a calibration was included for future range.

Maintenance Improvements

Whenever possible throughout the A-4 sight, plug-in type components that are precalibrated have been utilized. In the A-1 practically the entire sight was one unit. If one of the major components failed, the entire sight had to be removed and sent to a depot for correction and adjustment.

In the A-4, individual components such as the sight head, amplifier, computer, and sight selector unit may be replaced in the field with another unit that is already calibrated to operate properly. Also, the amplifier is subdivided according to its various channels, and if one of the channels goes bad, it may be replaced by another precalibrated channel unit. This greatly simplifies maintenance.

Operational Improvements

Faster servo loop mechanisms have been placed in the A-4 wherever possible, thereby speeding up the action of the sight in response to changes of range and angular velocity. This did much to correct the lag in manual ranging prevalent in the A-1, between twist grip movement and reticle and range dial response.

A-SERIES SIGHT MALFUNCTIONS

The previous discussions on sights were designed to acquaint you with the proper operation of the sights. By understanding the basic principles and methods of operation, you should be able to easily recognize whenever the sight is not working properly.

No attempt will be made here to pinpoint specific causes for particular malfunctions.

Digitized by Google

It is not necessary for the pilot to possess that information since he will never be required to correct a malfunction himself. Air Force technicians and factory representatives are provided to accomplish that task. They undergo extensive training and utilize a great deal of test equipment. with complicated procedures before they can pinpoint malfunctions. How then can the pilot expect to pinpoint troubles without that training and equipment? Obviously, he cannot.

The pilot must primarily concern himself with recognizing when the sight is not operating properly. He is a reporter of malfunctions. His job is to inform the maintenance personnel how the operation of the sight differed from the desired operation. His job is then finished. The maintenance personnel will then isolate the cause and correct it.

The important job concerning malfunctions is to recognize them and report them accurately. The organization that does a conscientious job of this will have much improved sight operation and gunnery scores.

For information, below is a list of the most common malfunctions that may be encountered in A-series sights and the probable causes.

Malfunction	Probable Cause
No reticle.	Defective reticle bulb. Dimmer control turned too low. No 28-volt DC. Defective lamp base.
Very slow range dial operation.	28-volt AC power low. 28-volt AC frequency too low. 300-volt DC power low. Defective range amplifier.
No reticle diameter variation during ranging.	No 300-volt DC. No 28-volt AC. Defective range motor. Defective range amplifier. Faulty range servo unit.
Reticle does not stay on windshield. Appears to have no stiffness current.	No 300-volt DC. Defective sensitivity amplifier. Defective range servo mechanism.
No depression of reticle in bombing function, but diameter of reticle remains fixed.	Defective relay K-302. Defective adapter unit.
No return to gunnery function when radar-out button is depressed.	Defective radar-out switch. Defective solenoid in selector switch.
No deflection of reticle.	Sight mechanically caged. No 300-volt DC. Defective elevation or deflection amplifier. No 28-volt AC. Defective adapter unit.
Range dial does not return to 600-foot mark when sight is mechanically caged.	Faulty K-121 relay. Faulty S-123 switch.

Digitized by Google

Malfunction	Probable Cause
Very slow travel of reticle to bottom of combining glass in gun function.	Defective K-304. Defective sensitivity amplifier. Open elevation torque motor winding. Open elevation stiffness motor winding.
Reticle does not rise when system is set for long ranges and electrically caged.	Defective caging switch. Defective K-306 relay. Defective R-302 resistor in amplifier chassis. Gyro gimbal restricted.
No variation in deflection stiffness when moved from HI to TR.	Defective TR-HI-LO switch. Defective K-103 relay.
After radar lock-on, any sudden change in reticle diameter and range dial moves to 1200.	Radar broke lock. Prediction mirror bomb stop should be adjusted.
After the bombing function is engaged, reticle disappears but fails to reappear again.	

M1 TOSS BOMBING COMPUTER

The M1 toss bomb computer is still in the developmental stage.

ERRORS COMMON TO COMPUTING SIGHTS — GUNNERY

The fighter aircraft in combat must engage in air-to-air attack against bombers or fighter aircraft, and air-to-ground attack against foot troops and equipment. The fighter pilot's primary armament in fulfilling these missions is presently the basic aircraft machine gun caliber .50, AN-M3, or the 20-mm automatic gun, M39. The elementary problem is simple enough — it is only to have the guns correctly pointed toward the target so that the projectiles will collide with the target. In obtaining this result a well-designed gunsight, properly harmonized with the guns and the aircraft, is a prime necessity. But to secure the maximum number of hits on a target, there are factors having to do with the capabilities and limitations of the fire control system that must be understood.

Limitations to Hitting Accuracy

There are many reasons why perfect hitting can never be obtained in combat, regardless of the excellence of the equipment and the skill of the pilot.

No equipment can be designed to fulfill perfectly a wanted function. There must always be compromise for the sake of lightness, cheapness, ease of manufacture, and adaptability for use. Moreover, no pilot can ever be expected to perform in the ideal manner desired by the equipment designer. Because of these limitations, errors must always occur in the individual projectile trajectories.

This section describes the errors originating with the pilot, the sighting equipment, and the guns; compares them against the known physical limitations of the pilot and the equipment; and indicates the bounds within which effective fire can be maintained and the mission accomplished. In the description it should be apparent that the errors from the different sources can often be made to cancel out when the equipment is applied with its limitations thoroughly understood.

Digitized by Google

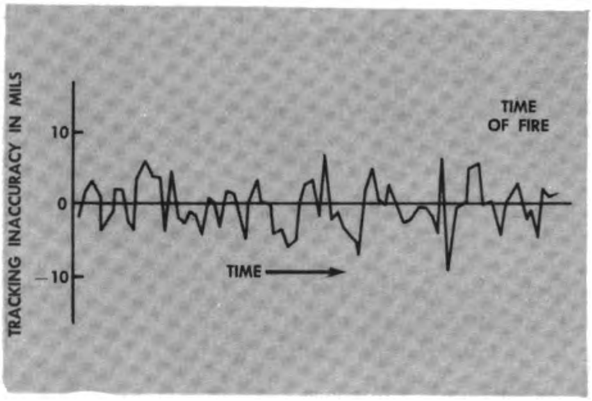

Tracking Inaccuracy During a Typical Pass at a Target

Error Sources

For purposes of convenience and understanding, the total error in the location of a bullet trajectory can be related to six sources:

a. Tracking inaccuracy.
b. Ranging inaccuracy.
c. Dispersion.
d. Random equipment errors.
e. Theoretical equipment errors.
f. Nonstandard conditions.

Each of these sources is described in detail.

Tracking Inaccuracy

One purpose of tracking is to match the rate of turn of the aircraft to the angular velocity of the line of sight, in order to introduce the correct angular velocity input to the computing sight. Since the magnitude of the correct lead angle is directly proportional to the angular velocity of the line of sight, an error in the angular velocity input to the sight will cause a like error in the computed lead angle.

A second purpose of tracking is to establish a reference with the target, from which the aircraft heading can be correctly offset by the amount of the computed prediction angle.

Although this ideal condition of tracking must be the goal of every fighter pilot, it is never realized perfectly in practice. In any optical tracking system, such as with the A-1 sight, it cannot be expected that the pilot will hold the tracking index perfectly on the target throughout a run. The simple reason is that before the pilot is able to sense that he is getting off target, there must actually occur an inaccuracy in the tracking. The tracking operation by the pilot then becomes a matter of correcting for the inaccuracies as they become large enough to be discernible. A skillful pilot will sense the inaccuracies when they are small and may to some extent anticipate their occurrence. The illustration shows by means of a graph the tracking inaccuracy that might occur during a typical pass at the target.

With lead computing sights, tracking inaccuracies that vary with time produce gun prediction inaccuracies that also vary with time, and whose magnitudes depend on the mechanism characteristics of the computer and the nature of the tracking inaccuracies. Tracking results demonstrate that low inaccuracies can be achieved by pilots who have been given the opportunity to develop proficiency with the equipment. In an early study made using the A-1 sight it was found that, at time of fire, the average tracking inaccuracy of a group of pilots was less than 1 mil and random in direction.

Because of the importance of dynamic (rapidly changing) inputs to a computing sight, the concept of tracking inaccuracy must be broadened to include the effects of three distinct tracking habits, each of which is recognizable to the tracker. For optimum firing results all three must be kept to a minimum, but the quantitative effect of each on the prediction angle cannot be determined accurately by simple means. These inaccuracies are:

a. The static, or slowly changing, tracking inaccuracy already described.

b. The rate of change of the tracking inaccuracy. This is a dynamic inaccuracy caused by a false angular velocity input to the sight. The condition usually exists when the pilot slews onto the target by very rapid correction of static errors.

c. The inaccuracy caused by the failure of the pilot to allow the sight to reach a solution before firing. During any pursuit course attack, the correct prediction angle changes with time as the target angle and the range change. Therefore, the pilot should track accurately for half the time of flight of the projectile after any considerable change in either the target angle or the range, in order to give time for the effects of these changes to "settle out" of the solution.

Ranging Inaccuracy

Comparable to tracking as a source of inaccuracy in gun pointing is ranging. Since the prediction angle depends directly upon the range, an error in the range input to a computing sight produces a proportional error in the aircraft heading. It has been found that the pilot's estimation of range is wholly unsatisfactory in air-to-air gunnery. For this reason, it is usually true that in attempts by the pilot to fire at the target when the aircraft has closed to an estimated predetermined range, the results will be unpredictable.

Stadiametric ranging may improve performance somewhat, but the method is at best approximate. In this type of ranging the target wingspan setting may often be a guess as to the true wingspan. More serious, the manual range control must be continuously adjusted consciously by the pilot in an attempt to establish a reticle circle diameter that just encompasses an imaginary "bubble" with a diameter equal to the wingspan of the target. When the wing line of the target is presented to the pilot at any angle less than a right angle, the estimation is difficult. It is unfortunately true that the prediction angle computed by the most skillfully designed computing sight can be in gross error because of faulty ranging.

Results obtained with radar ranging show that well-designed equipment of this kind will generate dependable ranging information and enable the fire control system to perform according to the design expectation.

Dispersion

The trajectory of a bullet fired from a gun depends upon several conditions that can be either controlled or predicted to a reasonable degree. Examples of these conditions are the gun position, muzzle velocity, gravity drop, and air resistance. But within these conditions are smaller variables, which it is not feasible to either control or predict. Examples of these are variations in the powder charge and temperature, gun vibration and erosion, and variations in the air resistance. Because of these less obvious effects it is impossible to determine exactly the path that a bullet will take after its discharge. A series of rounds fired under the most carefully controlled conditions will impact on a target in a dispersed pattern rather than at a point. This variation in the trajectory is called dispersion.

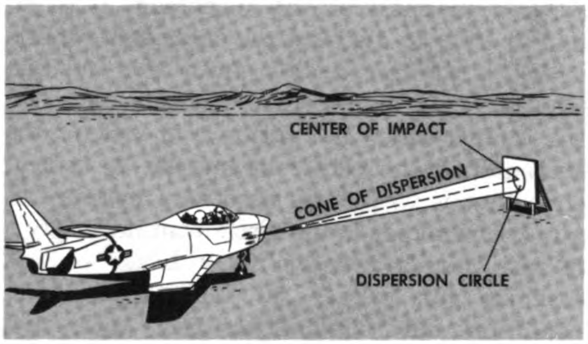

Cone of Dispersion

If a fighter is set up on the ground and a series of rounds is fired from one of its guns at a target some distance away, the trajectories of all the rounds fired at the target will form a cone of dispersion, with its apex at the gun and its base at the target, as shown in the illustration above.

Within the cone is a hypothetical trajectory that can be thought of as being the mean of all the shots fired. This mean trajectory intercepts the target at the center of impact. In a typical test firing, as shown below, the density of the impact points is greatest near the center of impact and falls off rapidly with respect to the distance from the center.

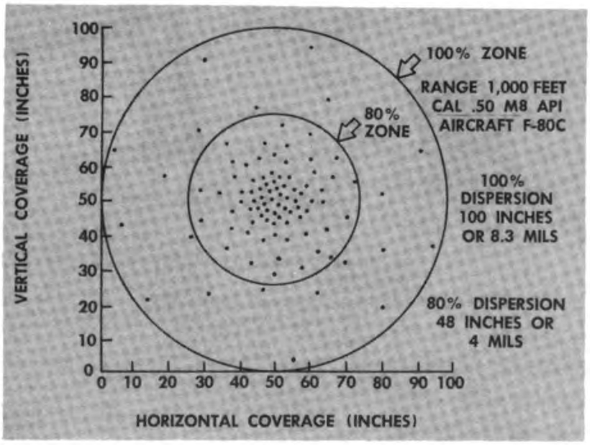

Typical Bullet Dispersion Pattern

Digitized by Google

As a measure of the dispersion pattern, and in order to discount the occasional rounds which stray appreciably from the average trajectory, it is customary to consider only the rounds which fall within a specified zone surrounding the center of impact. A typical zone that is frequently used as a measure of gun performance is the circle containing 80% of the rounds fired. With a basic aircraft machine gun caliber .50, AN-M3, in good condition and mounted securely in an aircraft, and with new ammunition, the diameter of this circle is about 4 mils. It is important to note that, with old ammunition, the diameter of the 80% circle may considerably exceed this amount.

Another measure of dispersion that is frequently used is the standard deviation, which is a circular zone containing 68.26% of the shots fired. This measure is useful because it relates the dispersion to the normal dispersion to the normal distribution curve, and hence can be used for statistical purposes. A typical application of the standard deviation is made later in this section.

Regardless of the measure used to express the dispersion, the point to be emphasized here is that, because of dispersion, the fighter pilot is actually controlling a cone of fire rather than a single trajectory terminating in the center of impact. This can actually be an advantage. Since, as explained earlier, inaccuracies are inherent in all phases of fire control, for which reason the center of impact can never be expected to be exactly on the target, a reasonable amount of dispersion acts to increase the hit probability. That is, although dispersion may make 100% hits impossible, it may raise the actual hits from zero to a useful amount.

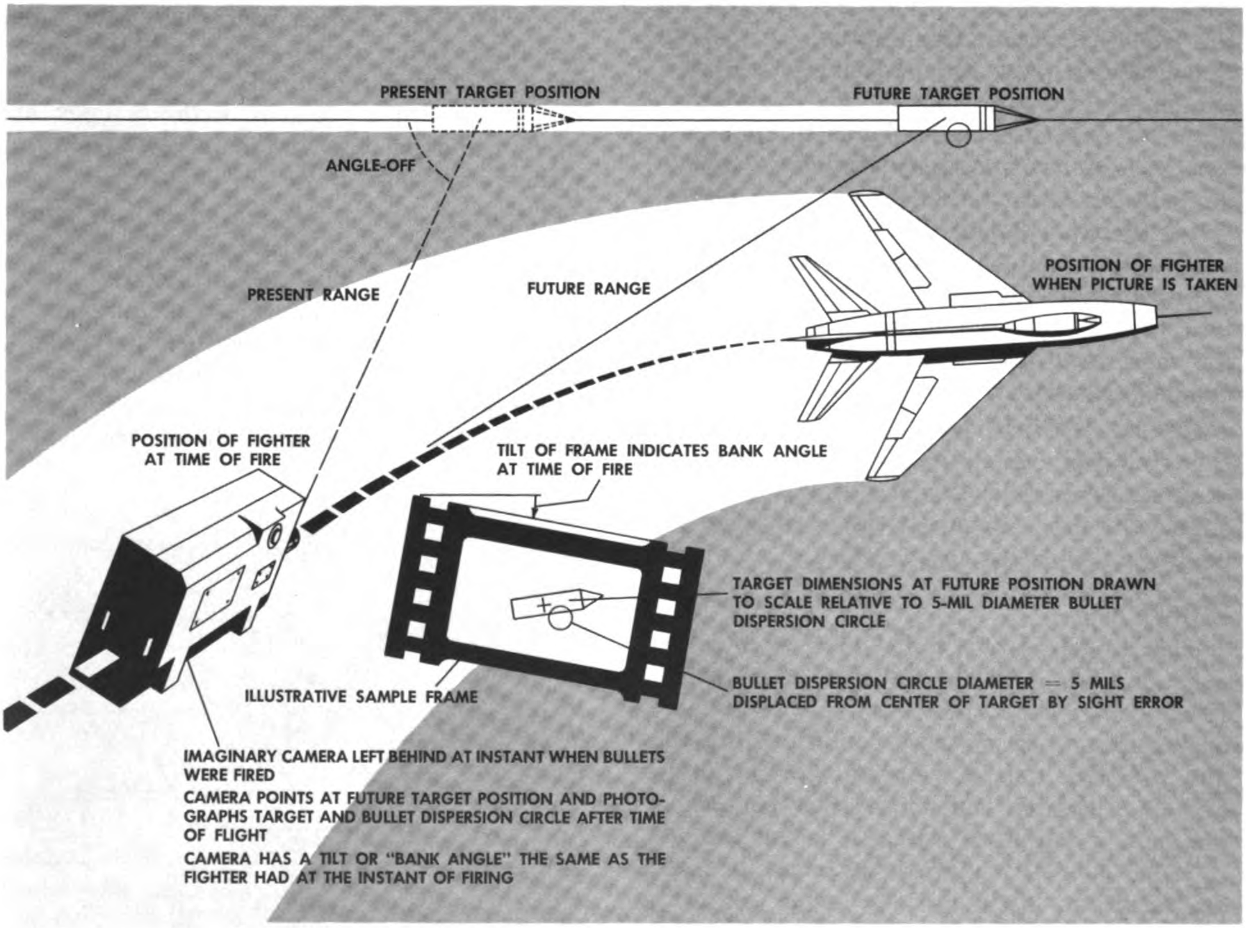

Pictorial Technique for Calibration Accuracy Study

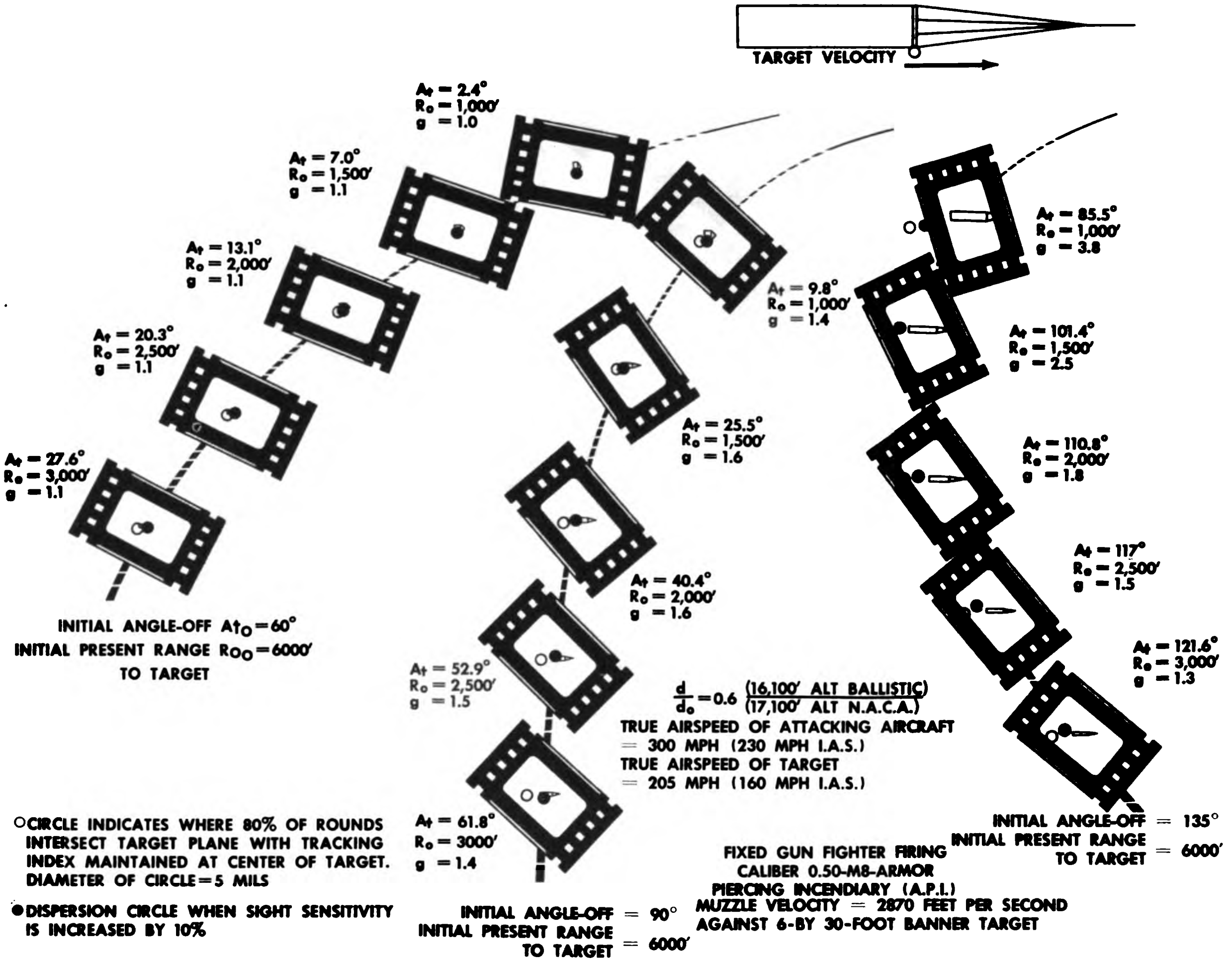

A-1 Sight Gunfire Performance (Firing Caliber .50 Ammunition from Moderate Speed Aircraft)

In fire against a banner or sleeve target, the maximum percentage of shots fired that can possibly strike a target for a given bullet dispersion depends on the target angle and the range at time of fire.

Random Equipment Errors

Fire control equipment must inevitably produce small errors because of backlash in gearing, residual friction in bearings, and changes in performance caused by variations in temperature, air pressure, and other physical quantities. Some control over these effects is possible through careful maintenance, but in general, they must be accepted as inherent in the equipment. Errors in impact from this source are generally small.

Theoretical Equipment Errors

As was pointed out earlier the A-1 and A-4 sights do not compute exactly the prediction angle required by the fire control problem but rather compute a mean value that best fits a variety of courses. The amount by which the computed value differs from the correct value is classed as a theoretical error, because it is inherent in the theoretical conception of the sight.

In order to gain some idea of the magnitude of the theoretical errors in the A-1 sight, a study was made of typical pursuit courses under selected conditions of flight. The errors revealed by this study are pictured in the illustrations above.

Digitized by Google

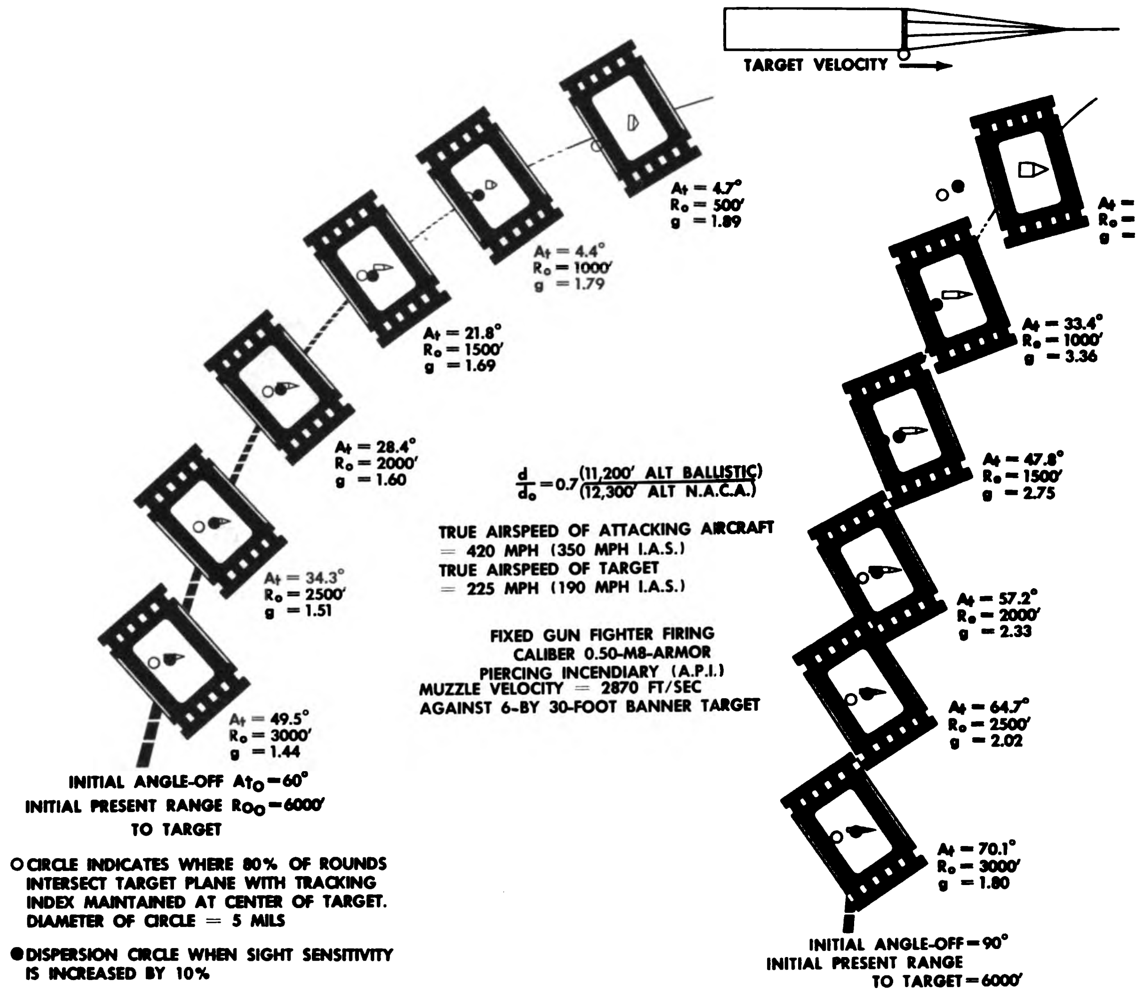

A-1 Sight Gunfire Performance (Firing Cal. 50 Ammunition from High Speed Aircraft)

The errors are shown as they would appear against a banner target. The tilt of each picture frame indicates the bank angle of the aircraft at the instant of fire. At the side of each frame are given the angle-off at this time and the corresponding range and normal acceleration. It is as though the camera were left behind, at the instant the gun was fired, to record the round as it hit the target in its position at the end of the time of flight. The target is shown to a scale commensurate with the range at the time of impact. Two small circular areas are shown with each frame. The clear circle indicates by its location the center of impact, and by its diameter it indicates a dispersion circle of 5-mils diameter pictured to the scale of the target. The shaded circle pictures in every way the information shown by the clear circle, except that it shows by its location the effect on the prediction angle of increasing the sight sensitivity (range setting) by 10%.

The second illustration pictures the results that might be expected with relatively slow-moving aircraft. The next illustration simulates training conditions in which a high-speed fighter aircraft engages a banner target. The conditions in the two illustrations differ primarily in the target and attacking aircraft velocities.

From an examination of the plots, several important conclusions about the theoretical gunsight error can be drawn:

Digitized by Google

a. The theoretical error may be an important part of the total error in the center of impact.

b. It depends markedly on the angle-off and on the relative velocity between the attacking aircraft and the target.

c. It can be minimized by a skillful pilot on most pursuit courses by controlled "tracking off."

No similar study has been made on a sight of the K-14 series.

Variation in Powder Temperature

The muzzle velocity, hence the trajectory, of a cal .50 bullet is sensibly affected by a change in the powder temperature. Since a fighter aircraft might operate in extremes of temperature within a single mission, this can cause important variations in the muzzle velocity.

The loss in muzzle velocity with an increase in altitude (and lower temperature) is compensated for, in a measure, by the lessened air resistance. In the A-series sights the calibration includes compensation for altitude only. The residual error in calibration due to temperature change is not corrected. However, heated ammunition compartments in some aircraft tend to make temperature changes less of a problem.

MANEUVER LIMITATIONS

The typical airborne targets of fighter aircraft are enemy fighter aircraft and bombers. As pointed out earlier, a head-on or tail approach requires the least maneuvering by the attacker, but there are reasons why neither of these approach paths is desirable. In the head-on approach the closing rate is so high that the time of fire is very short, even after the difficult problem of actually locating the enemy on such a course — the interception — has been solved. The same objections hold for a head-on attack against modern bombers, with the added objection that the bomber may have better means of interception and so be forehandedly alerted.

The tail chase has different but equally serious drawbacks. The relatively equal speeds of all jet fighters means that the stern chase of an enemy fighter is apt to be long and fuel-consuming, unless commenced at a very short range. Even then the enemy fighter will usually start maneuvering. In addition a bomber, although it may be a slower vehicle, is not a suitable target for a stern chase because of the retaliatory fire power carried in its tail guns. For these reasons, the fighter pilot finds that he is usually constrained to make some sort of approach from the side, overhead, or beneath. Whatever the initial range and angle of approach, the subsequent course will be a typical lead pursuit course, because it is determined by a lead computing sight.

The main problem of the pilot in a high-speed fighter aircraft on a lead pursuit course will be to turn rapidly enough to keep his fire directed at the target. This is well illustrated in the simplified "canned" courses presented in the two previous illustrations. These figures show, as might be expected, that the rate of turn depends upon three physical aspects of the fire control problem: (1) target velocity, (2) angle-off, and (3) range. The attacking aircraft velocity is not included in this list because the maximum speed of which the fighter is capable, fixed by the design of the aircraft, must always be exploited in fighter attacks. Speed is the fighter pilot's chief advantage. Moreover, at speeds much below cruising speed the maximum possible rate of turn may actually be decreased, because of a change in aerodynamic factors.

The rate of turn in radians per second for any value of the three variables listed in the preceding paragraph can be obtained by using the equation:

$$\text{Rate of turn} = \frac{\text{target velocity} \times \text{sine of the angle-off}}{\text{range}}$$

In this equation, the range and target velocity must be expressed in the same linear unit; for example, if the range is given in feet, the target velocity must be shown in feet per second. This equation is explained graphically in the illustration on the following page.

The combination of the range, angle-off, and target speed dictate the rate of turn necessary in an attack. But because of the high speed of a fighter aircraft, the required rate of turn may call for an excessive *g*-

Digitized by Google

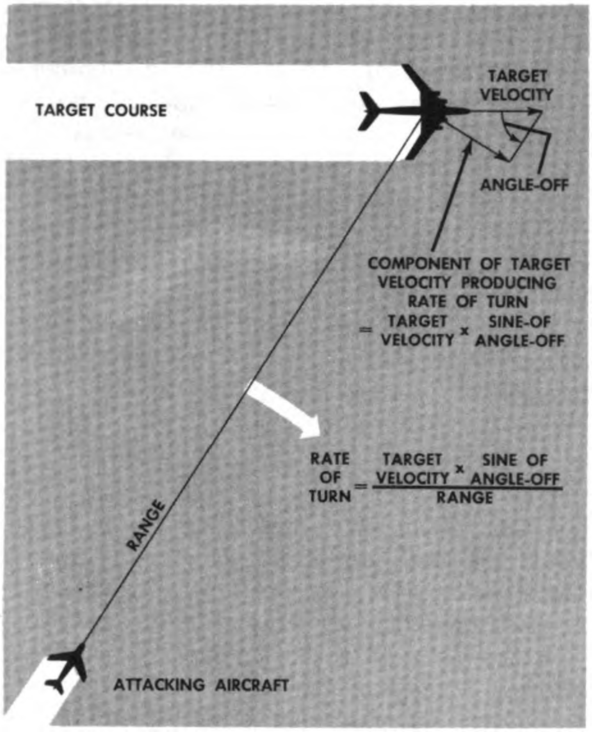

Rate of Turn in a Pursuit Curve

loading. This may result at high altitude in a mush or stall; at low altitude, it may cause the pilot to black out. In any case, the speed advantage will be sacrificed if the fighter aircraft is held in an excessively heavy turn for any length of time. Moreover, tracking becomes difficult in a tight turn and the value of the computing sight is lost. With a computing sight, the limiting acceleration for accurate tracking in a turn is approximately 4 to 5 *g*'s. A further disadvantage may be that, because of the increased angle of attack, visibility over the nose of the attacking aircraft is diminished.

For these reasons, it is important for the pilot to have some realization of the rate of turn a particular set of conditions might involve. In this respect the previous illustrations on gunfire performance can offer graphic support to the simple equation cited.

Other Considerations

The foregoing has revealed some of the phenomena that affect the hit probability of bullets fired from the guns of a fighter aircraft. But intimately connected with hit probability is the vulnerability of the target. For example, if experience shows that on an average it takes 40 hits with caliber .50 ammunition to bring down an enemy fighter aircraft, then there is merit in following through an attack under conditions that promise a hit probability greatly exceeding this number.

Such considerations are beyond the scope of this manual, but as data become available they can be combined with the material given here to establish effective tractics for practical use. A typical example is the optimum range at which to open fire. When a series of runs is to be made against a banner target, in which the rounds per pass are limited, common sense dictates that the rounds be fired within range limits promising the maximum hit probability. On the other hand, against a hostile aircraft where the attack is usually limited to a single pass, the best procedure might be to open fire at the maximum range that promises any probability of a hit, and to fire continuously as the range closes.

ERRORS COMMON TO COMPUTING SIGHTS — BOMBING

The essential distinction between a bomb and a bullet, as projectiles, is that the bomb derives all of its velocity at release from the carrying aircraft. It must therefore be classed as a low-velocity missile. The consequences are that (1) the direction of the flight path at the instant the bomb is released is critical in its effect on the impact point of the bomb, (2) the time of flight is long compared with that for a bullet, and (3) gravity has a considerable effect on the shape of the trajectory. For these reasons many errors which are small in gunfire become much greater in bombing. To this limitation must be added the relatively few bombs that can be dropped on a single mission compared with the many bullets that can be fired. Although the destructive power of a single bomb is many times greater than a bullet, this will be of little use if the hit probability is below that required for at least one hit.

In bombing, as in gunfire, greater ranges and faster speeds have forced out noncomputing methods of control and made the computing sight a necessity. But although several

Digitized by Google

types of computing bombsights are under consideration, only the A-1 and A-4 sights are standard with present models of fighter aircraft. For this reason the discussion in this chapter is restricted to dive bombing with these sights in their capacity as computing bombsights.

ERROR SOURCES

The six general miss-producing factors described in the preceding section become reduced to five in bombing. Since the A-1 and A-4 sights do not require range information as an input in the bombing mode, there is no associated ranging inaccuracy. So, in bombing, the principal sources of errors in impact are:

a. Tracking inaccuracy.
b. Dispersion.
c. Equipment uncertainties.
d. Theoretical sight errors.
e. Nonstandard conditions.

In the following paragraphs, each of these sources is analyzed to show the important elements that contribute to the total error in impact. The total error in impact can be measured easily, but with present knowledge it is difficult to state the part of the total error that is contributed by any one of the sources listed above, except in a general way.

Tracking Inaccuracy

A good share of the error in the impact of a dropped bomb can be charged to the errors in aim at the instant of release. As with gunfire, the aiming error is due largely to pilot errors (tracking errors) and errors of the computing sight.

Pilot errors can be large for reasons that do not occur in gunfire. For example, on a bombing run with the A-series sights, the pilot "comes in" initially in a straight-in approach to the dive, so that the nose of the aircraft blocks out his view of the target for several seconds before the pushover. During this time the aircraft heading may change enough so that, when the target again comes into view after the pushover, the pilot is forced to make a large correction in deflection to place the pipper on the target. (For tactical reasons the pilot may find a 90° side approach preferable, in which case this large initial correction will not be necessary, and the quality of tracking thereby improved.)

It is also true that a pilot may be off in deflection for a reason inherent in the design of the sight. As explained earlier in this chapter, when the A-1 or A-4 sight is in the bombing mode, there is no elastic restraint on the deflection computer shaft. The effect is for the tracking reticle to be "loosely coupled" to the sight and less responsive to the actual aircraft heading. Moreover, tracking adjustments in deflection call for coordination of both aileron and rudder, that is, the aircraft must be rolled in the process of changing its heading. For all of these reasons, deflection tracking in bombing is apt to be less successful than in gunfire.

Tracking in elevation usually offers no serious problems at moderate dive angles. But in a high-altitude bombing run with the A-1 or A-4 sight, automatic bomb release occurs at a steep dive angle and fairly soon after the pushover. This makes tracking doubly difficult — there may not be time in the short tracking run for the pilot to refine his heading, and whatever he tries to accomplish must be performed in a dive that is rapidly approaching the vertical.

An additional source of tracking error originates in the method of bomb release. In aerial gunnery the pilot can to some extent choose his time of fire, holding it until he is satisfied with the tracking. On the other hand, in bombing there is but one proper release point on a run, over which the pilot has no direct control. Manual release having proved unreliable, automatic release must be used, in which the release point is sensed by the computer and is not controllable by the pilot. As a result, the pilot has no exact knowledge of when bomb release will occur, and no opportunity to refine his tracking procedure just before release.

Dispersion

Somewhat related to bullet dispersion with guns is the bomb dispersion that follows from irregularities in bombs of presumably like characteristics. Damage of any kind to the bomb casing or to the fins can have an appreciable effect on the ultimate trajectory.

Digitized by Google

For this reason the bombs should be handled so as to avoid damage of this kind, however slight it might appear.

Equipment Uncertainties

Automatic release depends for its precise determination on the quality of the computing sight calibration, the success with which the pilot maintains a smooth, spiral path during the run with his pipper held on the target, and the precision of the bomb release mechanism. This latter can greatly alter the bomb trajectory. The gyro torque on the elevation computer shaft must actually overcome the bombing accelerometer torque, and this event must be translated into action by a relay, thence into a release of the bomb shackles. Therefore, there is opportunity for variations in these functions to affect the release point, hence the trajectory. This is a potential source of error, but with careful handling and proper maintenance of the sight, the bomb release should occur as provided for in the design.

Other sources of random equipment error, similar to those occurring with gunfire, are present but relatively insignificant in comparison with the total bombing error in impact.

Theoretical Sight Errors

Information is not yet available on the theoretical errors generated by the A-1 or A-4 sight in the bombing mode, comparable to that for the gunfire mode given in the previous section.

Nonstandard Conditions (Aerodynamic Effects)

As explained earlier in this chapter, either wind or target motion *along* the approach path is corrected for in the A-1 or A-4 sight by an estimated, manual setting. It can be expected that the impact point will likewise be in error to the extent that this estimate is inaccurate. The sight directs the aircraft in *deflection* along a collision course to the target, so that if the air between the aircraft and the target is in uniform motion, no error will arise from a cross wind.

But after a bomb is released, it must fall through succeeding layers of air which become progressively more dense. These layers may be moving with respect to each other, and nearer the ground there may be marked turbulence. There is no way by which the pilot can estimate these variations and set in the proper compensation. And because of a bomb's relatively long time of flight, these factors can have an important effect on the impact location.

Circular Probable Uncertainty

For all of the reasons described, the total dispersion in dropped bombs is large in com-

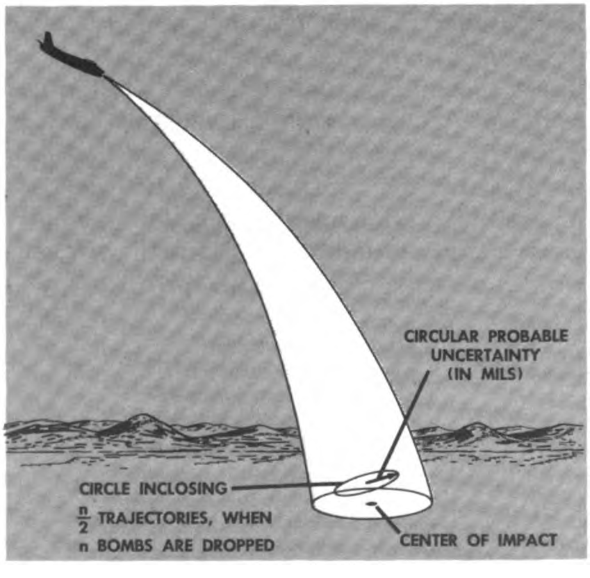

Circular Probable Uncertainty in Bombing

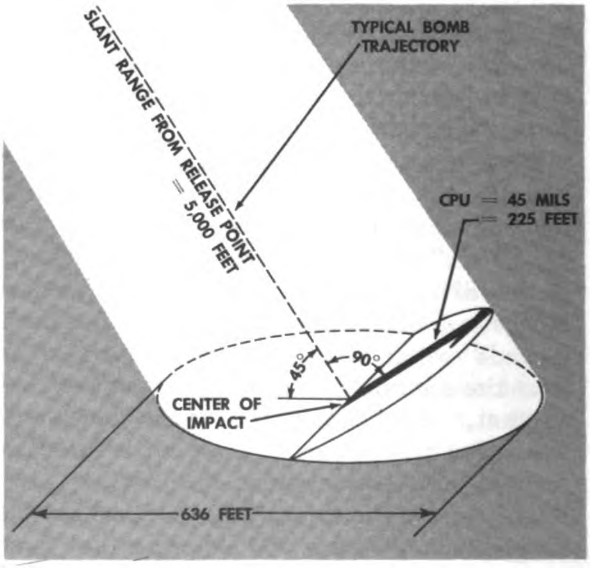

Typical Linear Miss in Bombing when the CPU is 45 Mils

Digitized by Google

parison with gunfire or even with rocketfire. A useful measure of dispersion in bombs is the circular probable uncertainty (CPU) which is a circle perpendicular to the trajectory at the point of impact, with its center at the center of impact, and inclosing half of the trajectories of all the bombs dropped. The circular probable uncertainty is illustrated on the previous page.

It is obviously impossible for an aircraft to launch a statistically large number of bombs from a given point in space, as shown in this illustration. But, as a practical matter, data are collected on bombs dropped on a number of missions, and these data can then be grouped to evaluate the CPU of all the bombs dropped.

The A-series sights when used for bombing can be expected to give a CPU of 45 mils. What this means in terms of linear miss on a ground target is shown in the illustration at the bottom of the preceding page.

The figure illustrates the fall of a bomb from a slant range of 5,000 feet, for a bombing system with a CPU of 45 mils, and for a trajectory that meets the ground plane at an angle of 45°. Under these conditions half of all the bombs dropped will fall over or short by not more than 318 feet, and will fall to the right or left by not more than 225 feet.

Bombing Courses

It is sometimes not clear that in bombing with the A-1 or A-4 sight, the initial approach can be made, within limits, at any angle and at any speed. The only requirement is that the spiral path set up by the depressed sight line must become tangent to a free-fall trajectory passing through the target. The illustration above shows several possible courses, based on different initial altitudes, but at the same aircraft speed, on which a correct bomb release point occurs that will place the bomb on the target.

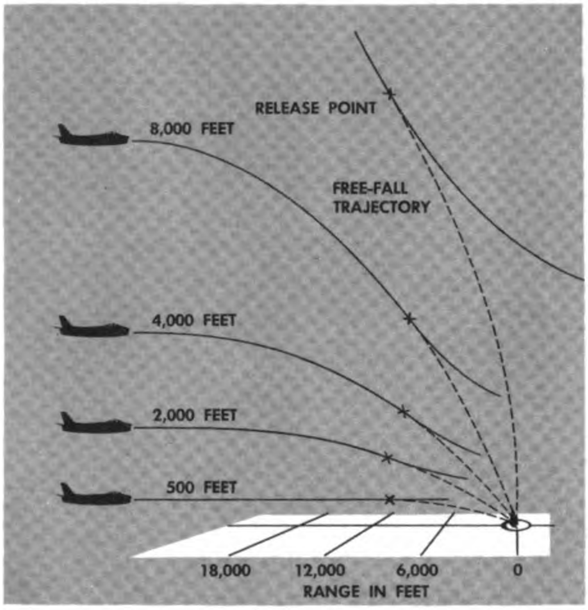

Effect of Approach Altitude on Bomb Release Point

This figure shows the effect of a steep dive angle in shortening the time to automatic release.

The next illustration shows what happens when the approach altitudes are kept the same, but the aircraft speeds are changed.

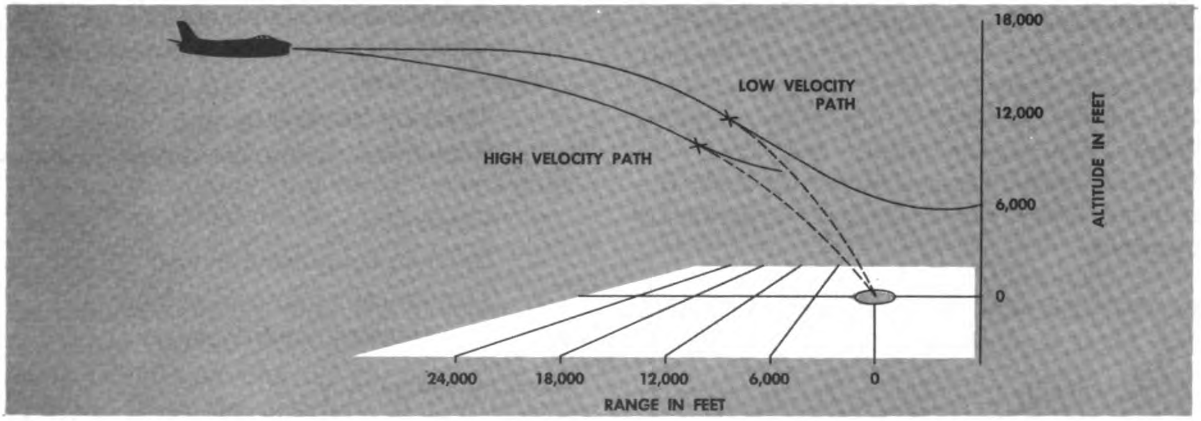

Effect of Aircraft Velocity on Bomb Release Point

Digitized by Google

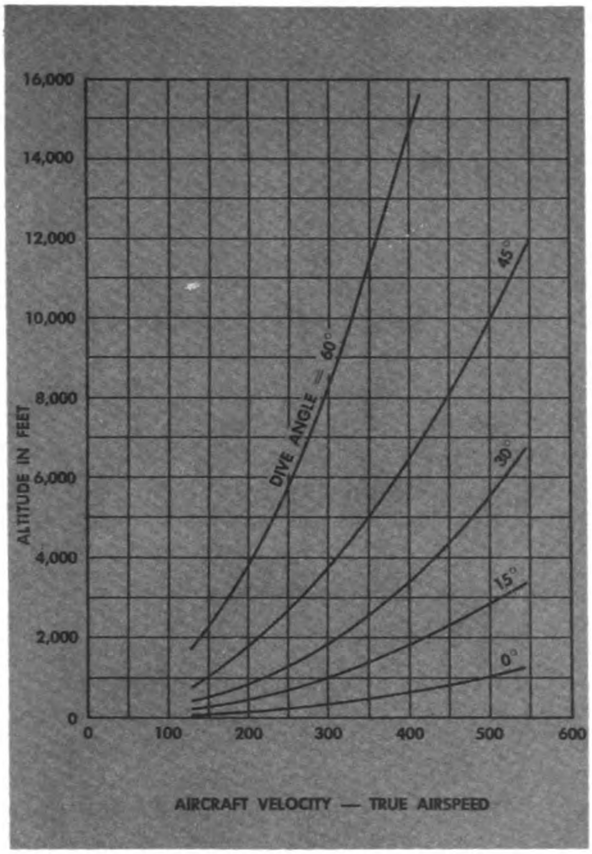

Conditions of Automatic Bomb Release — A-1 Sight

The actual angle of dive at the automatic release point depends upon the speed of the bombing aircraft and the range and altitude, from the target, of the pushover point, where the bombing run truly begins. This is illustrated in the graph above which relates the several automatic release conditions. From the graph it can be seen that increasing the aircraft velocity causes the bomb to be released farther out from the target. For a given aircraft velocity, an approach from a higher altitude calls for an increase in the dive angle at release. The curves shown are based on theoretical calculations and do not show the exact conditions which would be experienced in practice.

ERRORS COMMON TO COMPUTING SIGHTS — ROCKETRY

From the standpoint of ballistics, rocketfire is intermediate between gunfire and bombing. For example, in typical attacks projectile velocities would be of the following order:

	Initial velocity (ft/sec)	Max. velocity (ft/sec)	Impact velocity (ft/sec)
Bomb, 500-lb.	500	900	900
Rocket, 5", HVAR	500	1,750	900 1,500
Bullet, cal .50, M8, API	3,270	3,270	1,100 2,400

A peculiarity of the rocket is brought out if the three classes of projectiles are compared from the standpoint of acceleration with respect to the launching aircraft. A bomb is given no acceleration, it is simply dropped. A bullet is accelerated to its muzzle velocity in a short, straight barrel. The rocket is also accelerated by the burning of its propellent, but the acceleration takes place while the rocket is in flight on a course curved downward because of gravity. It is as though the rocket were fired from a long, curved barrel extending to the burnout point.

Error Sources

In line with the intermediate velocity of the rocket, the errors to be expected in a group of rocket trajectories are also intermediate, being much greater than in gunfire but only about half that for bombing. A typical value for the circular probable uncertainty (CPU) in rocketfire is 25 mils. The actual errors depend on the same general factors that influence bullet and bomb trajectories but generally to a different extent. In fact, the six miss-producing factors apply equally to rocketfire, if estimation of the dive angle is included with the estimation of range as a source of error. With this single change, the list for rocketfire inaccuracies becomes:

1. Tracking inaccuracy.
2. Range and dive angle estimation inaccuracy.
3. Dispersion.
4. Random equipment errors.
5. Theoretical equipment errors.
6. Nonstandard conditions.

Tracking Inaccuracy

The pilot's problems of tracking in rocketfire are practically the same as in gunfire but also

Digitized by Google

include some of the difficulties of bombing. Because the rocket at the time of launching has a velocity only slightly greater than the aircraft, the rocket is particularly sensitive to all forces acting on it at this time. When the rocket is fired from an aircraft whose wings are level, the forces exerted on the rocket (motor thrust, aerodynamic forces, and gravitational pull) act chiefly in the vertical plane containing the rocket axis. The knowledge that these forces act principally in a forward and downward direction makes it possible to obtain an accurate prediction of the direction of the rocket trajectory. But when the aircraft is in a skid or roll, other forces are generated, which act in a lateral direction. As a result, depending on the direction of these lateral forces, the effective launcher line is displaced horizontally, and the rocket will strike wide of its target.

If the aircraft is in a skid at the time of firing, the fore-and-aft centerline of the aircraft, therefore the rocket sight line, is temporarily at some angle to the flight path. Upon being fired, the rocket swings approximately into the flight path and proceeds along a path that is approximately the skid angle from the sight line. If the sight line has been held on the target during the skid, the rocket impact point obviously will be in error. Careful trimming of the aircraft during the approach is therefore necessary.

Roll is unavoidable when, because of wind or target travel, the attacking aircraft must change its heading laterally on the approach. Tracking is always more difficult in roll because of the coordination required between the rudder and elevators. Minor changes in heading, inherent in the tracking process, affect the rocket trajectory very little.

Because of the nature of rocket flight, as long as the aircraft follows a steady curve of approach in the attack, its line of flight will remain essentially unaltered, even though bumpy air might cause rapid fluctuation in the heading of the aircraft with respect to the target. The rocket tends to follow the direction of the airflow rather than the direction of the launcher line, so that slight wander of the launcher line around the target will not adversely affect the accuracy of fire, provided that the wander is not consistently off target in one direction.

Range and Dive Angle Estimation Inaccuracy

When the firing range is increased, allowance must be made for greater gravity drop, greater flight time, and decreasing striking velocity. All the sights in the K-14 series operate on the basis of a fixed range input, the requirement being that the pilot fire his rockets when the specified range is reached on the run. Estimation of the slant range requires considerable practice. In the computing sights of this series (K-14C, K-18A), errors in range estimation are partly compensated for by the action of the variable reticle during the approach. Since the depressed sight line causes the aircraft to fly a curved path toward the target as the range to the target decreases, the turning rate of the aircraft will increase in a downward direction. This causes the reticle to move upward at an accelerating rate. By keeping the reticle on the target, the pilot then effectively decreases the rocketfire depression angle, thereby compensating for the diminishing range.

Range estimation is less critical in the steeper dives because of the reduction in the trajectory curvature. It will be noted by reference to the rocket ballistic tables in appendix III that the amount of the verticle drop of the rocket from its effective launcher line decreases as the dive angle of the launching aircraft increases. This effect can be understood if you consider both the gravitational force and the thrust of the rocket motor as vector forces. As the dive angle increases, the angular separation between the gravity vector and the rocket thrust vector decreases, with the result that the rocket is deflected to a lesser extent from its effective launcher line. However, the possible gain in hitting accuracy may be offset by the greater difficulty in tracking. In any case, the selection of the dive angle should be based primarily on a consideration of terrain features, tactical advantages, and the need for sufficient altitude for dive recovery.

Although there is less trajectory curvature with steep dive angles, this very fact makes the actual amount of the dive angle critical. Since, with sights of the K-14 series, the rocketfire depression angle is partly decided on the basis of the expected dive angle, any error in estimating the angle of dive will alter the im-

Digitized by Google

pact point. Experience shows that it is difficult to estimate the angle of dive, and as a consequence, this may account for a part of errors in impact.

When the A-series sights are used, estimation of the dive angle is equally critical; however, the only estimation required is to choose between "steep" and "normal."

Angle-of-Attack Changes

Because velocity jump is affected by the flight path direction, any change in the angle of attack will change the magnitude of the velocity jump angle and, therefore, will shift the rocket line of departure. The extent of impact errors arising from changes in angle of attack is difficult to determine, because some of the factors that alter the angle of attack, such as variation in aircraft velocity and dive angle, themselves exert a directive influence on the path of the rocket.

Dispersion

The mean ammunition dispersion for aircraft rockets is approximately 5 mils, although as with bombs, injuries to fins and other superficial parts of the rocket can greatly increase it. When such malformations are absent, dispersion in rockets will be due chiefly to thrust misalinement and variations in the propellent temperature. These two factors are described in the text which follows.

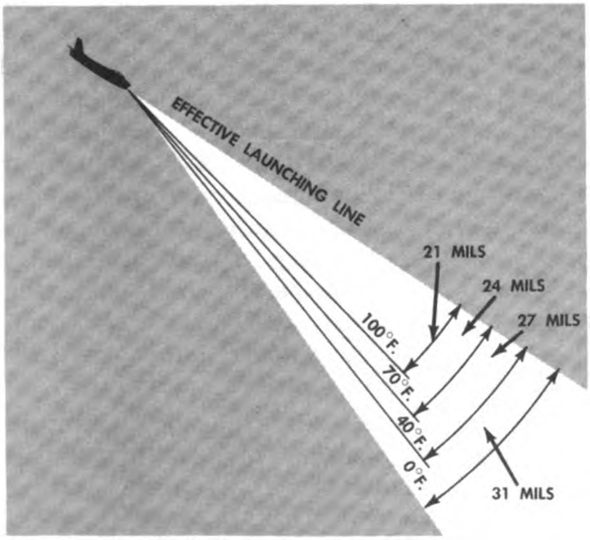

Effect of Propellent Temperature on Trajectory of an Aircraft Rocket

THRUST MISALINEMENT. Variations in the rate and direction of burning of the rocket propellent cause variations in thrust, which alter the flight characteristics of the rocket. Variations in thrust and uneven burning frequently result in a misalinement between the direction of thrust and the rocket's longitudinal axis. This misalinement of thrust is one of the principal causes of dispersion in the 5-inch HVAR. Ordinarily, the dispersion effects of thrust misalinement increase with slant range and altitude. In the case of the 5-inch HVAR, the dispersion angle increases from this cause by a factor of nearly 3 when the launching altitude is increased from 5,000 feet to 35,000 feet. However, in the smaller 2.75-inch FFAR, misalinement of thrust is thought to be a less serious cause of dispersion, since the average of the horizontal and vertical dispersions increases from 4.5 mils to only 5.4 mils for the same increase in altitude.

CHANGE IN THE PROPELLENT TEMPERATURE. Propellent temperature has an important effect on rocket velocity. An increase in the temperature (temperature of the propellent just prior to ignition) increases the burning rate of the fuel, resulting in an increased gas pressure within the motor tube. Since the rocket is propelled by the action of the gas pressure, the greater pressure results in an appreciable increase in rocket velocity, which in turn affects the time of flight and the impact velocity.

The illustration to the left shows the variations in the performance of the 5-inch HVAR resulting from variations in propellent temperature. Note that when the rocket is fired under the conditions stated in this figure at a ground target about 1,100 yards slant range, the rocket will miss the target by 40 to 50 yards if the propellent temperature is misestimated by 20° F.

Even though high propellent temperature result in increased rocket velocity and smaller gravity drop, rockets must be fired only within the service temperature limits specified on the motor tube. Firing the rocket at excessively high temperatures can result in rupture of the motor tube, whereas the use of the rocket below the minimum temperature results in a slow, erratic flight.

Digitized by Google

Unfortunately, no convenient method for ascertaining propellent temperature is available, so that it is necessary to estimate it by a consideration of the various temperatures to which the rocket is exposed, from storage to the time of firing. Measurement of the cooling rate of rockets is complicated by the fact that the propellent near the grain surface changes temperature at a faster rate than the internal parts of the grain. However, as an approximation, the propellent in the 5-inch HVAR changes temperature at the rate of 10° F. per hour for each 20° F. change in ground temperature. When the rocket is carried on an aircraft that is climbing steadily at the rate of 1,200 feet per minute, the propellent temperature will drop about ½° for each minute of flight.

The 2.75-inch FFAR, because of its smaller cross section, is more sensitive to temperature changes. Preliminary test date indicate that various sections of the grain change temperature at substantially different rates. But averaging the overall changes, the rocket propellent drops about 12° F. per hour for each 20° F. change in temperature on the ground. Cooling rate data for this rocket when carried in flight are not currently available.

Equipment Errors

No information on the theoretical errors generated by any of the sights used in rocketfire is yet available. The random errors generated in the fire control system are small in comparison with the circular probable error for rocketfire.

An error that must be classed as a sight error comes from the need for course alterations to follow a moving target or when there is a cross wind. The necessary lateral tracking corrections require roll of the aircraft. Motion of this kind has not been totally compensated for in the design of the A-series sights, and becomes a source of error.

Aerodynamic Effects

Atmospheric conditions between the launching point and the target affect a rocket to a degree comparable to that for bombs. To gain the maximum advantage in striking velocity and penetrating power, the attack should be planned so that the rocket will reach the target as soon as possible after the burnout of the motor. The velocity at burnout for various types of rockets is given in the rocket ballistic tables in appendix III.

AN/APG-30 RADAR SYSTEM

The APG-30 is a pulse-type, range-only radar system designed for operation with the A-1 and A-4 gunsights installed in day fighter aircraft.

General Description

The APG-30 transmits a very intense pulse for 0.5 microsecond and has an inter-pulse or rest period during which time it can receive echos for approximately 1,250 microseconds. At the end of the inter-pulse period, the transmitter is again keyed and the cycle is repeated. There are about 800 of these pulses per minute.

A pulse-type radar such as this transmits an intense signal. The APG-30 generates a pulse of 5 kilowatts. This is, of course, much weaker than ground radar sets put out, but it is still a relatively intense signal.

This system transmits in the X-band frequency with a range from 600 to 8,000 feet. The range varies with the type of object you are trying to track. The radar can lock-on a propeller-driven bomber at its maximum range of 8,000 feet. The rotating propellers have great reflectivity by virtue of their rotation. The maximum range that the radar can detect a jet fighter is somewhere around 5,000 feet.

The signal is transmitted in an 18° cone that is normally tilted down 4° from the fuselage reference line.

It takes 3 minutes from the time the generator has started working until the radar is ready to transmit and receive properly. After that interval, the set is in standby until the sight is turned on. It is powered by the 115-volt aircraft inverter.

The APG-30 is designed to give a tracking accuracy of plus or minus 75 feet from 600 to 8,000 feet anywhere within its 18° cone. It will lock on and track a target up to a closing speed of 1,000 knots, and maintain that lock-on up to 50,000 feet of altitude. The altitude limitation is due to pressurization facilities.

Digitized by Google

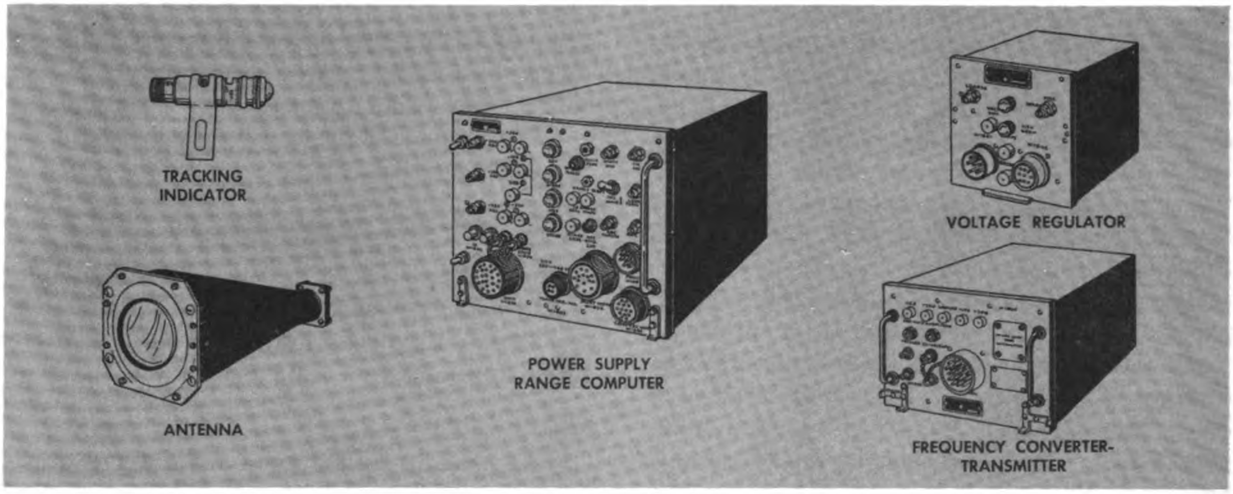

Major Components of AN/APG-30 Radar Set

Components

ANTENNA. An antenna mounted in a fixed position radiates search pulses and receives echo pulses reflected from the target. Either a horn-type or a rod-type antenna can be used. The rod-type antenna has a greater side-lobe radiation. There are several models of horn-type antenna, one of which is shown in the illustration above.

FREQUENCY CONVERTER-TRANSMITTER RT-181/APG-30. This unit generates the radar pulses and the time reference pulses simultaneously. It also detects and amplifies echo pulses reflected from the target and sends them to the receiver in the power supply-range computer.

POWER SUPPLY-RANGE COMPUTER PP-493/APG-30. This component has three separate functions:

a. The power supply sub-unit supplies the low-voltage direct current to the radar set.

b. The receiver sub-unit detects and amplifies echo pulses sent from the frequency converter-transmitter.

c. The range computer sub-unit generates a range gate that searches for echo pulses within the selected range. When such an echo pulse is received, the range gate locks on it and automatically tracks the target that reflects the echo pulse. A direct-current voltage, proportional to the range to the target, is produced and is fed to the range servo of the A-1 gun-bomb-rocket sight.

VOLTAGE REGULATOR CN-112/APG-30. The voltage regulator supplies regulated 115-volt, alternating current to the frequency converter-transmitter and the power supply-range computer.

TRACKING INDICATOR ID-270/APG-30. This tracking indicator is a red lamp that lights when radar is tracking a target. It is mounted on or near the sight head of the A-series gun-bomb-rocket sights for easy observation.

Starting the Radar System

1. Place the power switch in the SIGHT-CAMERA-RADAR position, and allow set to warm up for a minimum of 3 minutes.

2. Place the power switch in the GUNS-SIGHT-RADAR position.

> NOTE: If the equipment is placed directly in the GUNS-SIGHT-CAMERA position without a preliminary warmup in the SIGHT-CAMERA-RADAR position, a 3-minute delay period is required to secure complete radar operation.

Indications of Operation

There will be no indication while the radar is searching. During search, the radar transmits a fixed signal to the sight allowing it to rest at 1,150 plus or minus 150 feet of range at all times while the radar is seeking a target.

When the radar finds a target, you will have the following indications that the radar has locked onto that target.

a. The radar lock-on light will come on.

b. The reticle size should vary according to the changes in range as you close on the target.

Digitized by Google

c. The pipper position should vary in response to range changes. In many cases this is difficult to detect.

d. The range dial should indicate the changing range of the targets as you close on the target.

Target Selector Switch (Radar Reject Button)

The target selector switch on the control stock allows you to select the target that you desire to track.

Once the radar has locked on a target, it will maintain that lock-on even if another target should pass between you and the target. However, you may depress the target selector button and change the lock-on to another target. In that case, the radar will react in the following manner:

a. The radar searches only outward to its outermost range and then comes back to its beginning point and starts searching outward again.

b. When the target selector switch is depressed successively, first the radar will lock onto the next target farther out each time until it is at its maximum range. Then it will start at 600 feet again and lock onto the first target it encounters. Subsequent changes will result in a lock onto the next target farther out again, etc.

As the radar locks onto a target farther away, the reticle size will become smaller and the pipper should drop down slightly. After it has reached its outermost range, it comes back to 600 feet to start ranging outward again. In this case, the reticle will increase in size coming back to the minimum range, and then begin decreasing as it starts ranging outward. The pipper will jump up, and then start dropping again. This may be used as an indication of whether you are locked on the target or tow ship when firing aerial gunnery.

If you are locked on the tow ship and depress the target selector switch, the pipper will drop down, then jump up, and then drop down again as it locks onto the target. At the same time, the reticle will decrease in size, increase, and then decrease again slightly. This would indicate that you are now locked onto the target and may fire as desired.

If you are on the target, as the target selector switch is depressed, the pipper will merely drop down a little and the reticle size will decrease as your radar goes out and locks onto the tow ship. This would tell you that you are locked onto the tow ship, and you should depress the pipper once more to obtain a target lock-on.

If lock-on is broken, it will, normally, occur at fairly close range to the target. Immediately upon breaking lock, the radar will start searching for another target and the sight will go to its 1,150-foot resting point.

If the lock was broken at less than 1,150 feet of range, the pipper will move down immediately on the reflector plate as the sight generates the greater lead for the 1,150-foot resting point range.

If the lock was broken at greater than 1,150 feet of range, the pipper will first move down abruptly, then up again quickly as the sight generates the lead first for the maximum range, then finally for the 1,150-foot range.

In general, whenever lock-on is broken, the first indication to the pilot will be the pipper dropping down on the reflector plate abruptly.

Radar Range Sweep Control

The radar range sweep control is used to eliminate ground interference when operating at altitudes below 10,000 feet. It controls the maximum range at which the radar will lock on a target. Full increase will allow a lock-on out to 8,000 feet. Full decrease will allow a lock-on only to 5,000 feet.

During operations below 10,000 feet of altitude, it is possible for the radar to lock on the ground since at this low level you are near the maximum range of the radar and the ground return will be very strong. Therefore, the radar range sweep control should be turned fully counterclockwise when operating at low altitudes. This will reduce the maximum range over which the radar will search and will decrease the likelihood of locking onto the ground.

The radar will maintain its aircraft lock-on even near the ground unless lock is broken by having the target get out of the 18° cone. At that time it will then lock onto the ground.

Digitized by Google

Many pilots prefer to go into manual ranging when near the ground rather than chance the ground lock-on and lose the time required to obtain another lock onto the target aircraft.

The particular method used will, of course depend upon each particular pilot's preference.

Typical Malfunctions

Below are listed some typical radar malfunctions, probable causes, and suggested solutions.

Constant lock-on light indication. This is usually a noise lock-on. If you depress the target selector button, the light will go out and the radar will search normally for another target. Continue to hold the button depressed until the light comes on indicating a lock on another target. Release the button and the radar should work normally until lock is broken on that target. Then you must repeat the previous process.

Breaking lock intermittently. This is caused by a maladjustment of the tracking circuit within the radar set.

Breaking lock around 1,000 to 1,300 feet. This can be caused by several things.

a. Below 15° angle-off, the area presented by the target radar reflector is insufficient to permit the receiver to pick up the returning echo. In this case the radar would break lock on the target and would probably pick up the tow ship.

b. For firing gunnery at 20,000 feet and above, the radar sets must be pressurized. Pressurization of the sets is accomplished on the ground and normally lasts only 4 or 5 days. Therefore, it must be constantly checked. Lack of pressurization can cause the radar to break lock prematurely.

c. It is possible that you obtained a break of the lock-on at the proper range. Then, by the time that you looked down to the range drum, the sight had already positioned itself at its 1,150-foot resting point while the radar was searching for a target.

Note: If there is any doubt about the range at which the radar is breaking lock, position yourself in trail with another aircraft, and close slowly, noting the range at which lock-on breaks. This should give an accurate check of the range.

Operational Check

The operation of the radar can be checked during flight by maneuvering the aircraft so that it points at another aircraft in the formation that is within the operating range of the set. If the equipment is working properly, the red tracking indicator lamp will light and the variable reticle circle of the A-series gun-bomb-rocket sights will span the target.

Turning Off the Radar System

Turn the power switch to the OFF position.

Digitized by Google

CHAPTER 3

fighter weapons

The variety of weapons which a fighter aircraft can bring to bear on an enemy target makes the aircraft a versatile and potent combat weapon. With numerous types of bombs, rockets, and ammunition to select from, the fighter pilot is capable of delivering effective fire power against a wide variety of tactical targets.

This chapter describes the components and explains the operational principles of the AN-M3 caliber .50 machine gun, and two 20-mm automatic guns, the M24A1 and the M39 (T160). The appropriate type of ammunition is discussed in connection with each gun.

The principles of rocket propulsion are explained prior to a description of the basic components and types of aircraft rockets. Information is given concerning rocket launchers and their operation.

The chapter closes with an explanation of the classification of bombs and bomb fuzes and a description of the bombing equipment used on fighter aircraft.

AN-M3 CALIBER .50 MACHINE GUN

The basic aircraft machine gun caliber .50 AN-M3, shown below, is fully automatic, recoil-operated, and air-cooled. It develops a muzzle velocity of 2,870 feet per second and can fire at the rate of 1,250 rounds per minute, using disintegrating-type ammunition belts. By proper repositioning of parts, it is possible to feed the gun from either the right or left side. The trigger mechanism is operated by an electric solenoid controlled from the aircraft cockpit. The assembled gun weighs 64.7 pounds, has an overall length of 57.5 inches, and maximum width of 5.5 inches. With proper maintenance the gun barrel has a minimum service life of 5,000 rounds.

Components

Each of the separate major components of the AN-M3 is shown in the picture of the major working groups on the next page. The functions of those various parts are described below on the next page.

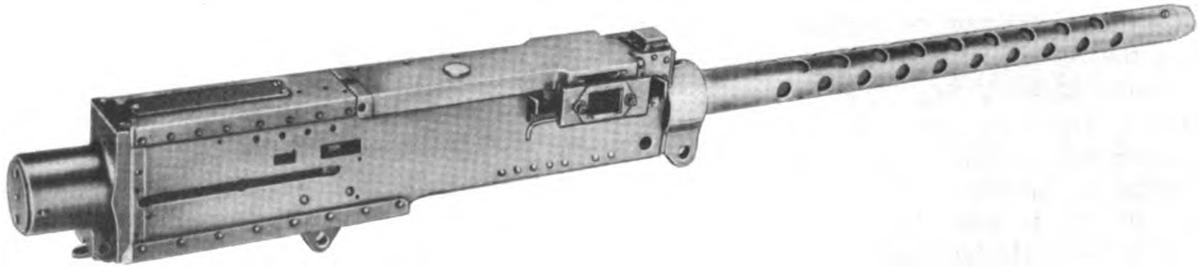

Basic Aircraft Machine Gun Caliber .50 AN-M3

Digitized by Google

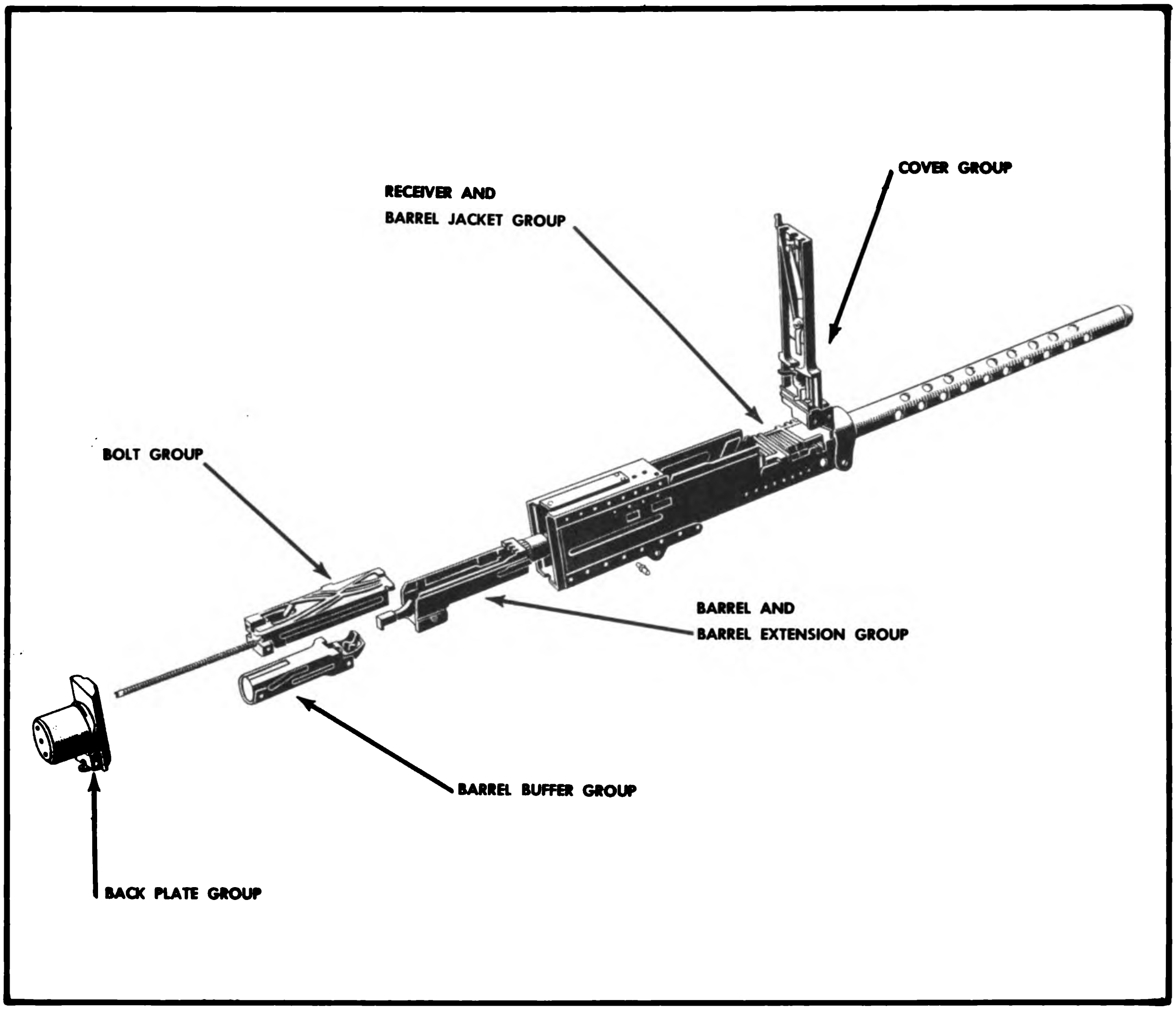

Receiver Section of Gun — Cutaway View

Receiver. The receiver is the outer casing of the gun and houses the recoiling parts of the gun.

Cover. The cover closes the top of the receiver and contains the automatic ammunition feed mechanism.

Backplate and buffer. The backplate closes the rear end of the receiver. The buffer stops the recoil of the bolt and starts it on its counterrecoil stroke.

Bolt. The bolt group, during recoil and counterrecoil, operates the feed mechanism, extracts a cartridge from the ammunition belt, inserts it into the chamber, fires it, extracts the cartridge case from the chamber, and ejects it from the gun.

Barrel and barrel extension. The barrel contains the chamber in which the cartridge is fired. Rifling in the barrel gives the bullet a spinning motion to stabilize its flight. The barrel extension, threaded onto the rear end of the barrel, connects the barrel to the other groups in the receiver.

Barrel buffer. The barrel buffer stops the recoil motion of the barrel.

Operation During Automatic Firing

The automatic operation of the gun can be understood by following the action of the bolt group as it moves from battery to the rear of the receiver during recoil, and returns to battery during counterrecoil.

Digitized by Google

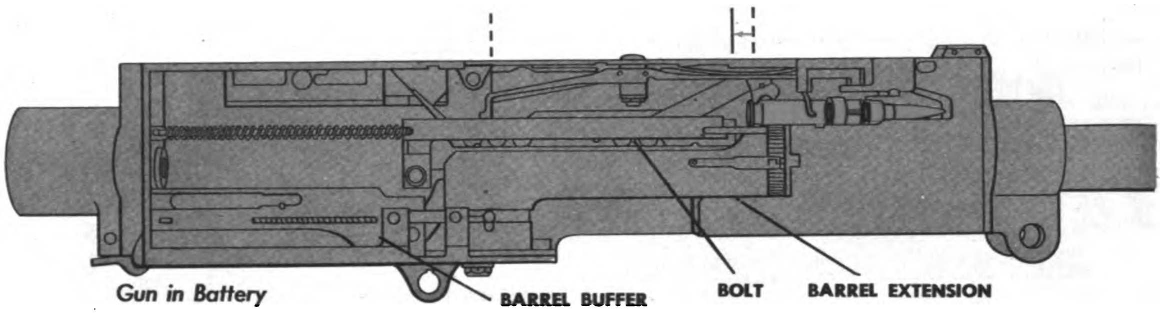

Gun in Battery

Recoil. At the instant the gun is fired, the bolt and barrel groups are *in battery*, that is, the face of the bolt rests against the rear end of the barrel. This position is illustrated above. The bolt and the barrel extension are locked together by the *breech lock*. The explosion of the cartridge kicks back against the face of the bolt, and causes the bolt, together with the barrel extension and barrel, to recoil.

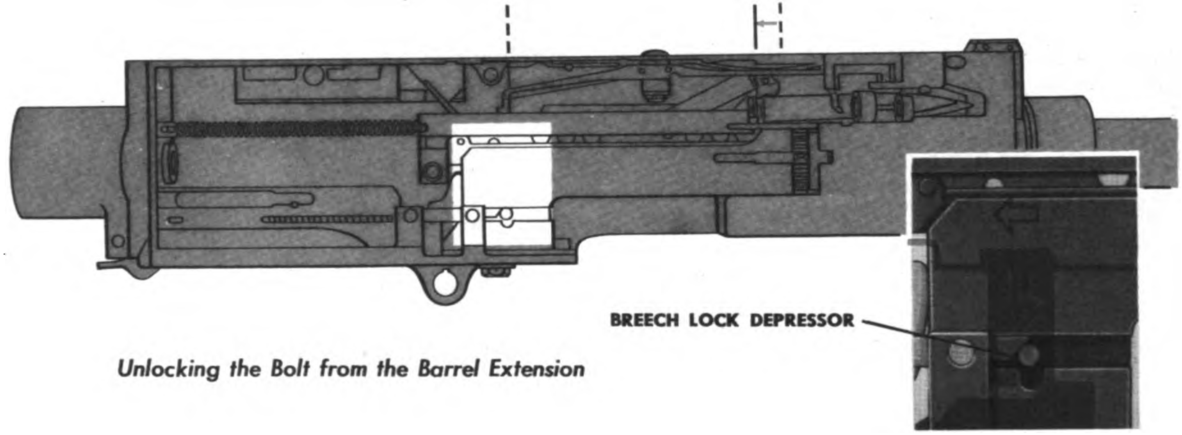

Unlocking the Bolt from the Barrel Extension

When the bolt and barrel groups have travelled back about 1 inch, the barrel buffer prevents the barrel group from recoiling any farther. Then, as the barrel group is being brought to a halt, the breech lock is forced out of its slot in the bottom of the bolt by the breech lock depressors on the sides of the receiver. This action, shown in the illustration above, unlocks the bolt so that it can continue to recoil.

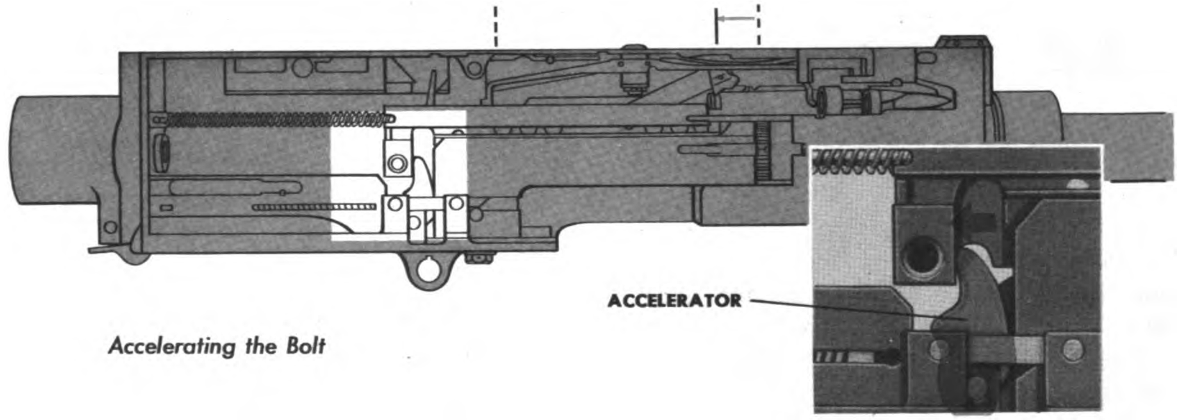

Accelerating the Bolt

Just after the bolt is unlocked, it receives an extra backward flip from the accelerator, in order to speed up the recoil of the bolt and thereby increase the rate of fire of the gun. The accelerator holds the barrel extension against the barrel buffer as shown above. This prevents the barrel group from returning to battery until the bolt has come forward on its counterrecoil stroke.

Digitized by Google

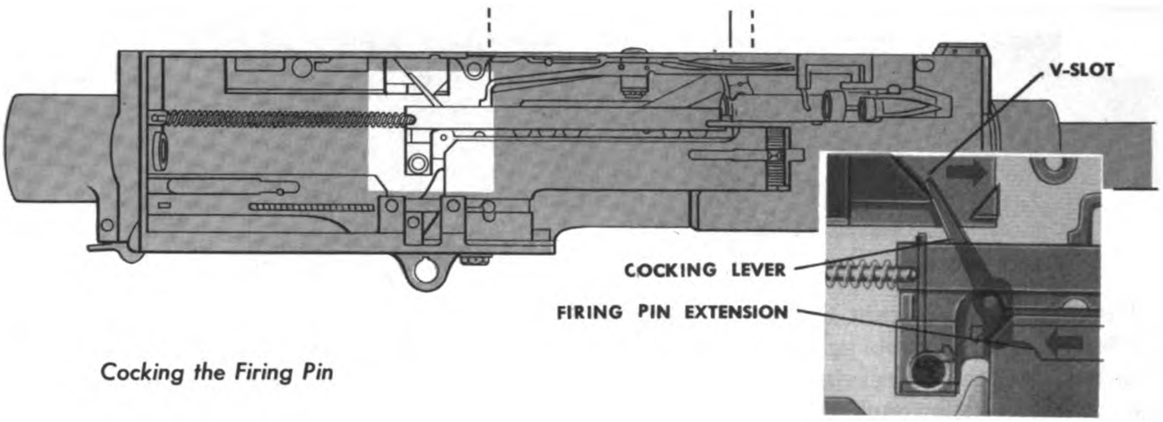

Cocking the Firing Pin

When the bolt is nearly at the end of recoil, the firing pin is cocked as shown in the illustration above, so that another cartridge can be fired when the bolt returns to battery. The cocking action occurs when the tip of the cocking lever strikes the rear wall of the V-shaped slot on the top of the receiver. The cocking lever pivots forward and the extension is forced back until a notch on the bottom of the extension engages a similar notch on the bottom of the sear. The firing pin remains cocked until pressure from the trigger mechanism depresses the sear so that contact between the two notches is broken.

The recoil of the bolt is completed shortly after the firing pin is cocked. The bolt strikes the backplate buffer and immediately starts to counterrecoil because of the combined action of the spring washers in the buffer and the compressed driving springs of the bolt group.

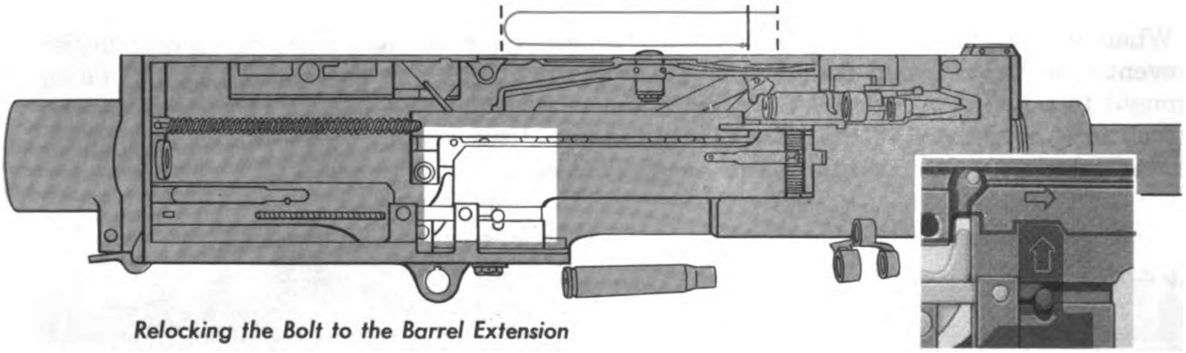

Relocking the Bolt to the Barrel Extension

Counterrecoil. Pushed by the driving spring, the bolt moves with increasing speed toward battery. About 1 inch before the end of counterrecoil, the bolt strikes the protruding tips of the accelerator, and pivots the accelerator forward. As the accelerator pivots, it accomplishes two things. It releases the barrel extension, which it held locked against the barrel buffer, thus setting the barrel group into motion. The action of the accelerator also slows down the bolt.

Shortly after the barrel group starts moving, the breech lock is forced up into its slot in the bottom of the bolt, relocking the bolt to the barrel extension as shown above. The bolt and barrel groups travel the remaining distance to battery together.

The new cartridge, inserted into the chamber as the bolt returns to battery, can be fired as soon as the firing pin is released. The exploding cartridge causes the gun to repeat the cycle just described.

Digitized by Google

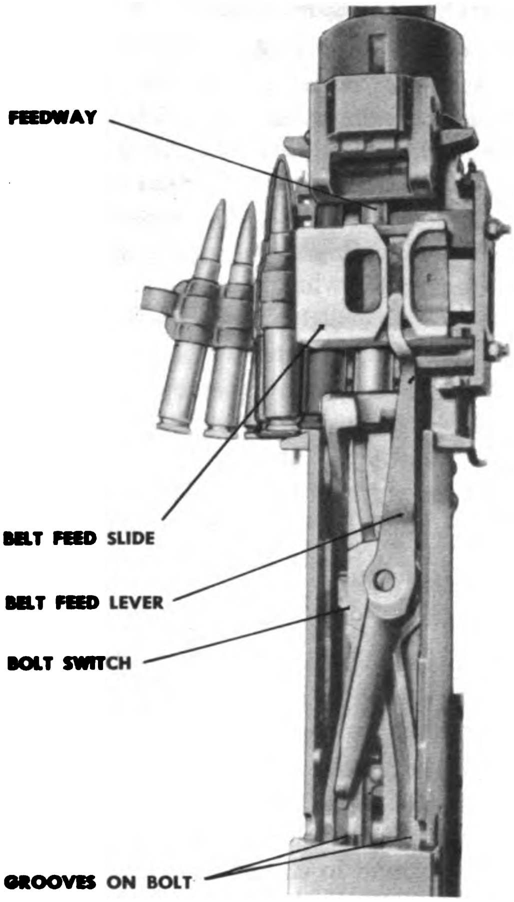

Belt Feed Mechanism

Feeding

Belt feed mechanism. The belt feed mechanism pulls the ammunition belt into the gun at the rate required to keep pace with the rate of fire of the gun. This is accomplished by synchronizing the feed mechanism with the bottom of the bolt, using the belt feed lever as the linkage. A stud at the rear of the *belt feed lever* follows a groove on top of the bolt and the front end of the feed lever is connected to the *belt feed slide*, the device that pulls the ammunition belt into the gun. The *bolt switch* can be shifted to make the belt feed lever follow either groove on the bolt, depending upon the desired direction of feed. These components of the belt feed mechanism are pointed out in the illustration above. Some bolts for the M-3 gun do not have the bolt switch and are termed "left" or "right" bolts.

Each time the bolt travels through a cycle of recoil and counterrecoil the belt feed lever causes the belt feed slide to move out of the cover, grip a cartridge, and push the belt toward the gun. When the feed slide is all the way out of the cover, the *belt feed pawl* and the *belt feed pawl arm* drop to the outside of the new round. As the slide returns to the cover, these levers push the new round into the *feedway*, moving the entire ammunition belt toward the gun in the process. This process is illustrated below.

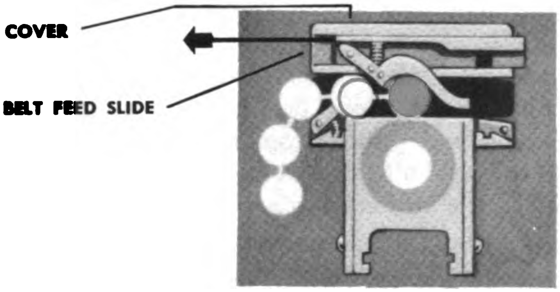

Bolt starts to recoil. Belt feed slide moves out of cover. Extractor, not shown, begins to pull cartridge in feedway out of ammunition belt.

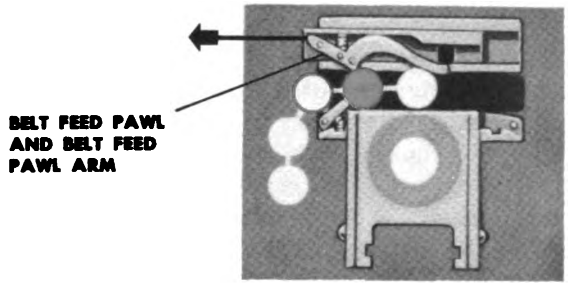

Bolt near end of recoil, belt feed pawl and belt feed pawl arm passing over new round.

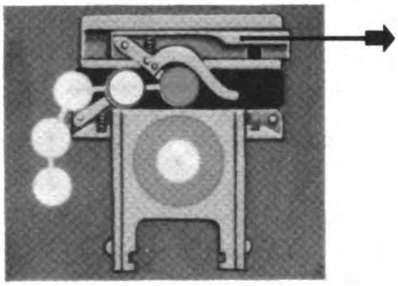

Bolt returning to battery. Belt feed slide returns to cover, pushing new round into feedway.

Action of the Belt Feeding Mechanism

Feeding round into chamber. After the new round has been brought into the feedway by the belt feed mechanism as shown above, the round must be carried into the chamber to be fired. The recoil and counterrecoil of the bolt are used for this loading operation. Explosion of the round already in the chamber causes the bolt to recoil. As the bolt recoils, the new round in the feedway is pulled from the ammunition belt by the extractor, an armlike lever that extends from the forward part of the bolt. The empty link falls through the open side of the feedway. The extractor guides the base of the new round into the vertical T-slot in the face of the bolt. The round rests above the empty cartridge case, which was pulled from the chamber by the recoiling bolt, and remains in this position until the bolt starts its counterrecoil.

During the counterrecoil stroke of the bolt, the extractor pushes the new round farther into the T-slot, ejecting the empty case through the lower end of the T-slot. The discarded cartridge case falls through an opening in the bottom of the receiver into a box beneath the gun. The extractor keeps the round alined with the chamber until the tip of the cartridge enters the chamber. As the bolt pushes the round the remaining distance into the chamber, the extractor flips up and hooks onto a fresh cartridge which the feed mechanism has just delivered into the feedway. After the cartridge in the chamber is fired, the empty case is ejected, and another round is fed into the chamber by the process just described.

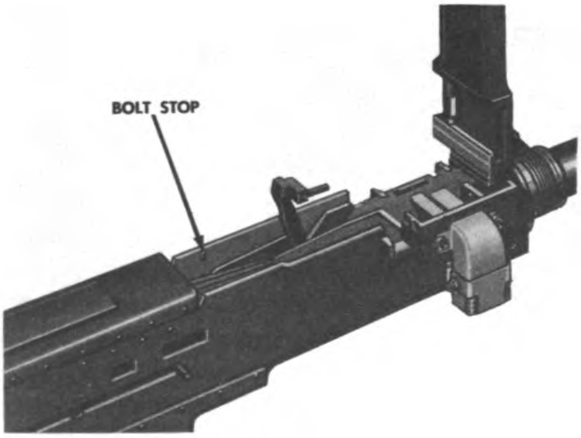

Location of the Bolt

Preparation for Boresighting

Either a muzzle tool or a breech tool can be used for boresighting the caliber .50 machine gun, depending on which tool is more convenient for the particular aircraft installation. Before beginning the actual boresighting operation take the following precautions.

Before inserting the *muzzle* boresighting tool, do the following:

1. Disconnect the trigger solenoid by removing electrical connector plug.
2. Raise cover and remove ammunition belt from feedway.
3. With cover down, charge the gun, several times for safety, to eject live round in chamber. Inspect chamber to make certain that it is clear before inserting the tool in the muzzle.

Before inserting the *breech* boresighting tool, do the following:

1. Disconnect trigger solenoid by removing electrical connector plug.
2. Raise cover and remove ammunition belt from feedway.
3. With cover down, charge the gun, to eject live round in chamber. Inspect chamber to make certain that it is clear.
4. Remove backplate group if there is enough working space in the gun bay. Release the driving spring assembly by pushing the driving spring retaining pin forward and out of its hole at rear of receiver.
5. Slide bolt back to rear of receiver and insert breech tool into chamber.

If there is not sufficient working space in the gun bay, retract the bolt and hold it at the rear of the receiver by pulling on the charger cable. With the bolt retracted, raise the extractor and aline it with the bolt stop shown at the upper left of the receiver in the illustration on this page. Let the bolt come forward slowly until the extractor rests against the bolt stop. This keeps the bolt retracted against the pressure of the driving spring. Then insert the breech tool.

> **Note:** Because of the possibility of the bolt slipping forward during boresighting, this method is not recommended and should be used only when the nature of the gun installation prevents following the procedure outlined previously.

Digitized by Google

Loading for Automatic Firing

1. Make sure that all gun selector switches are off.
2. Raise the cover and swing the extractor back out of feedway.
3. Take end of belt having the empty *double link.* Press first round against cartridge stops in feedway, with the double link extending beyond the stops. (This operation and the previous one are illustrated in the picture on the right.)
4. Swing extractor assembly down, making sure that its hook is in the extracting groove of the cartridge. Close cover and check to see that it is firmly latched.
5. Charge the gun. This moves a round into the chamber, and the gun can begin automatic firing as soon as the firing circuits are energized.

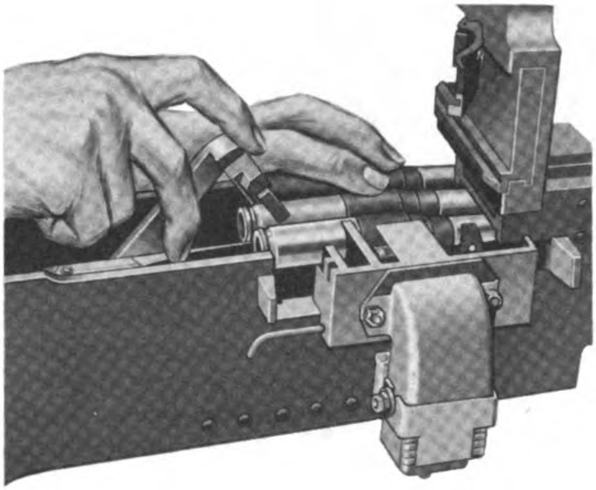

Loading the Gun

Loading a Single Round for Test Firing

Open the cover. Place the round in the position shown on the right so that it is resting against the cartridge stops. Close cover and charge gun to move round into chamber.

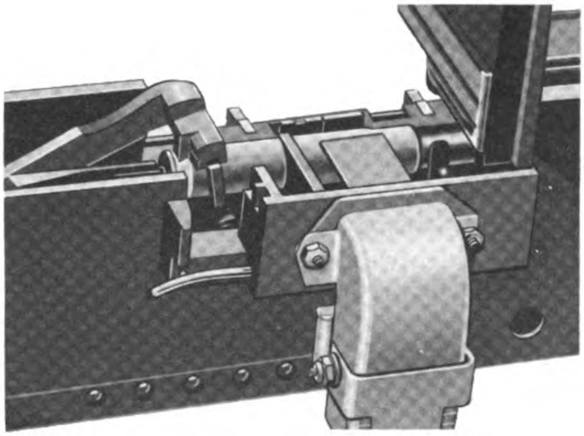

Position of a Round for Single-Shot Loading

Unloading

1. Raise cover. Swing extractor back out of the way, and lift the ammunition belt from the feedway. A live round will be in the chamber.
2. Close the cover and eject round by charging gun. Do this several times to make sure that the chamber is clear. As a double check, partially retract the bolt by pulling on charging cable (or by using the extractor for a handle), and after raising the cover, look down into the breech to see that the T-slot and the chamber are clear.

Maintenance

CLEANING THE GUN. Two of the most destructive enemies of a high-speed precision mechanism, such as a machine gun, are dirt and rust. These agents, when deposited on moving parts, cause rapid abrasion and wear, and sharply reduce the efficiency and service life of the gun.

Aircraft guns, because they are usually exposed to a wide range of temperatures and climatic conditions, must receive frequent and careful maintenance. Dirt, grease, and smears of cartridge metal not only wear down the moving parts of the gun, but also trap moisture as well. The cartridge primer deposits a chemical salt, called primer salt, which rapidly absorbs moisture from the air. As a result, rust may form in the chamber, in the receiver, and on the face of the bolt. Even a perfectly clean, well-lubricated gun will rust if it is neglected for any length of time.

For these reasons, guns must be cleaned after every firing, and often enough between firings for good preventive maintenance. Complete cleaning and maintenance instructions are given in TO 11W1-13-3-1.

Digitized by Google

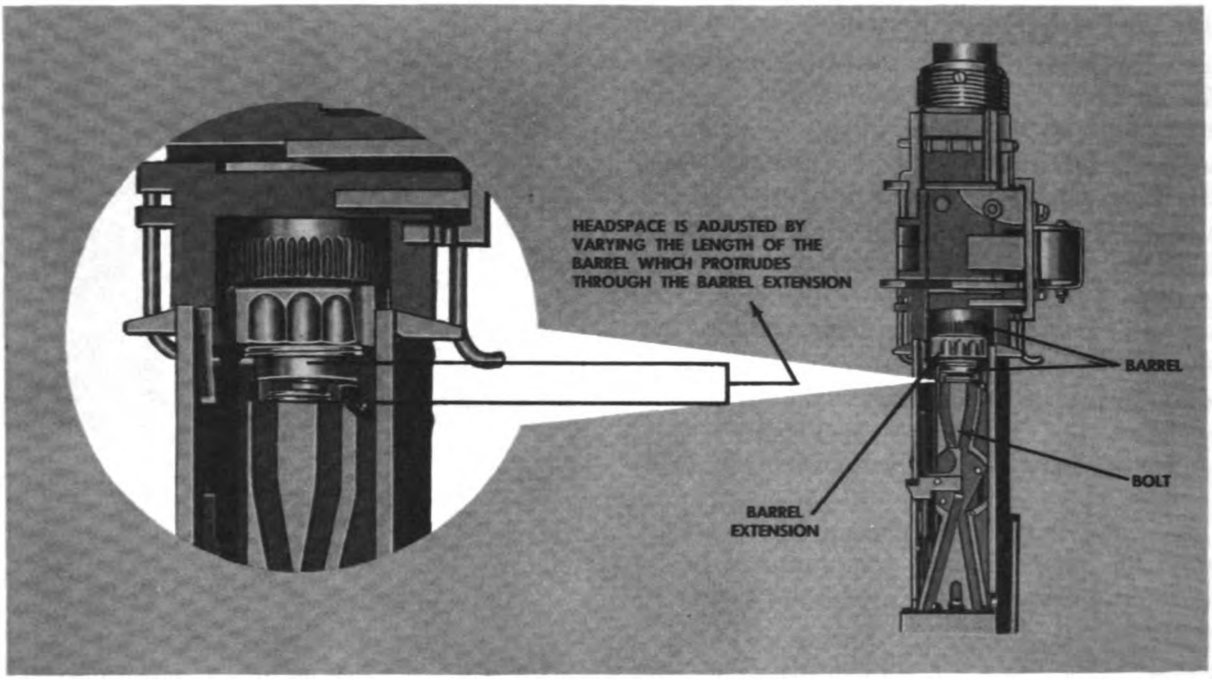

Headspace

HEADSPACE. Headspace is one of the adjustments required for the proper operation of the gun. Headspace is ordinarily defined as the separation between the face of the bolt and the breech end of the barrel, when the bolt has been pulled back far enough to eliminate any play at the breech-block. This separation is regulated by screwing the barrel in or out of the barrel extension as shown above.

When the headspace is too tight, the gun will operate sluggishly, and perhaps stop after firing a few rounds.

When the headspace is too loose, the recoiling parts, especially the breech lock and the barrel extension, will wear rapidly and require frequent replacement. The accuracy and muzzle velocity of the gun may be reduced because of gas leaks from the rear of the chamber. Sometimes, a cartridge case will split because of improper seating in the chamber.

See TO 11W1-13-3-11 for instructions on the adjustment and measurement of headspace.

TIMING. The timing adjustment governs how soon before the bolt returns to battery the firing pin is released. In a properly timed gun, the firing pin should be released when the bolt is 1/10 to 1/50 of an inch out of battery. Procedures for checking and obtaining the correct timing adjustment are given in TO 11W1-13-3-1.

CALIBER .50 AMMUNITION

The variety of ammunition available for the caliber .50 machine gun makes this weapon a versatile and effective component of fighter armament. The projectiles vary from a solid, armor-piercing shot to a thin casing containing an incendiary filler. The types of projectiles provide a convenient basis for classifying the ammunition. As shown in the illustration and table to the right, the classifications include

Ball
Armor-piercing
Armor-piercing-incendiary-tracer
Incendiary
Tracer
Headlight tracer
Dummy

For rapid identification, the various types of projectiles are tipped with characteristic color markings. However, dummy rounds are unpainted and are identified by means of three (or sometimes two) holes drilled into the side of the cartridge case.

Digitized by Google

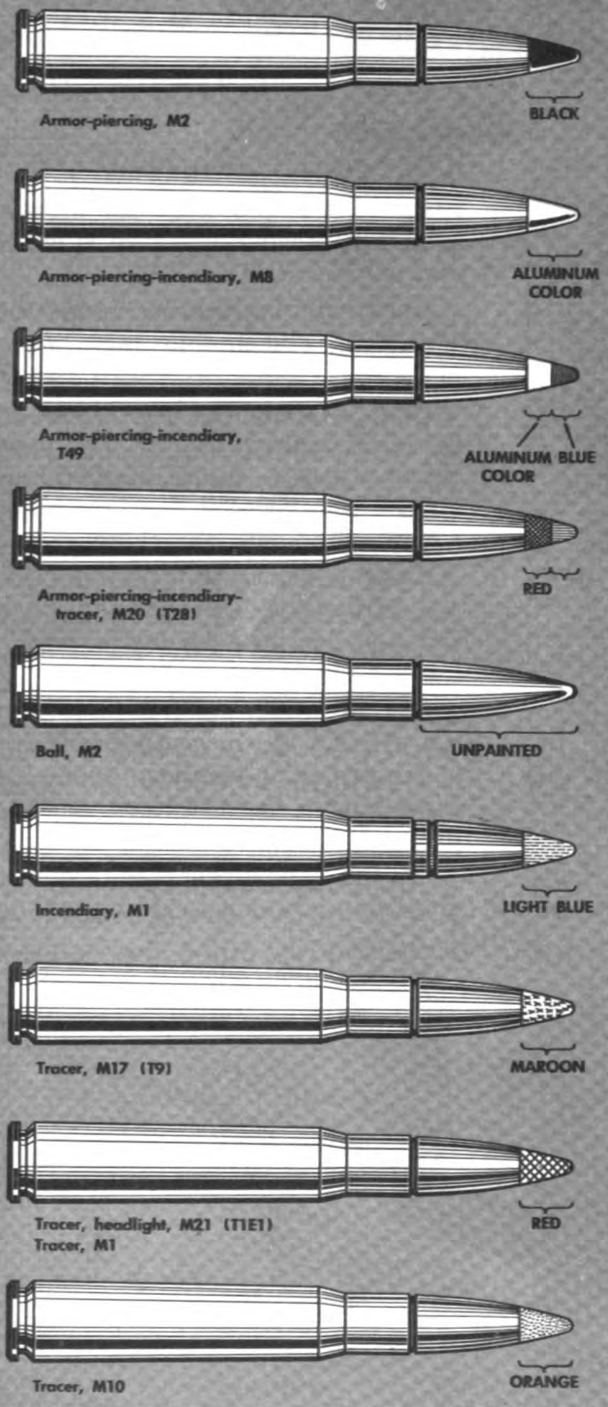

TYPE		FUNCTION
Armor-piercing, M2	BLACK	For use against armored vehicles, locomotives, and similar targets.
Armor-piercing-incendiary, M8	ALUMINUM COLOR	For use against armored, inflammable targets, such as fuel tanks.
Armor-piercing-incendiary, T49	ALUMINUM COLOR BLUE	
Armor-piercing-incendiary-tracer, M20 (T28)	RED	Dim trace to 300 yards and bright trace to 1,750 yards.
Ball, M2	UNPAINTED	For use against personnel and light material targets.
Incendiary, M1	LIGHT BLUE	For use against unarmored, inflammable, or explosive targets.
Tracer, M17 (T9)	MAROON	Tracer burns for 2,450 yards.
Tracer, headlight, M21 (T1E1) Tracer, M1	RED	Tracer burns for 1,800 yards. For training purposes only. Brilliant trace to 550 yards, visible from target.
Tracer, M10	ORANGE	Dim trace to 225 yards, and bright trace to 1,900 yards.

NOTE: Some safety rules to keep in mind when handling caliber .50 ammunition are listed under CARE AND HANDLING OF AMMUNITION, later in this chapter.

Cartridges Authorized for Use with the Caliber .50 Machine Gun AN-M3

Digitized by Google

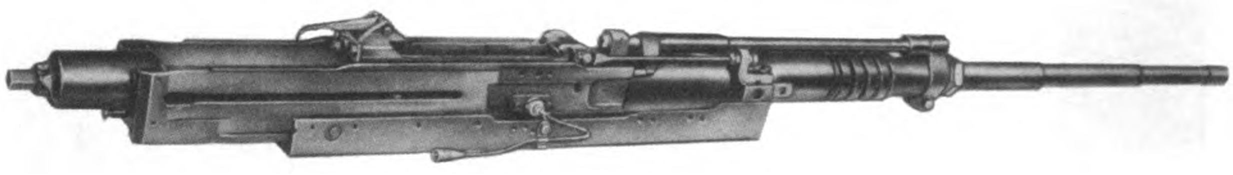

20-MM Gun M24-A1 in Cradle

20-MM AUTOMATIC GUN M24A1

The 20-mm automatic gun M24A1 illustrated above is an air-cooled, fully automatic weapon, designed for installation in aircraft. It is a combination blowback and gas-operated weapon that fires electrically primed ammunition at the rate of 700-800 rounds per minute and develops a muzzle velocity of 2,730 feet per second. The gun uses disintegrating-type ammunition belts, which can be fed from either the right or left side by means of an externally mounted automatic feed mechanism.

Components

Each of the components of the 20-mm automatic gun M24A1, is shown in the picture of the major working groups on this page. The functions of these various parts are described below.

Barrel. The barrel furnishes the chamber in which the cartridge is fired and imparts to the projectile its flight-stabilizing spin. The recoil mechanism is located at the rear of the barrel.

Receiver. The receiver is the outer casing of the gun, and contains most of the working parts.

Breechblock. The breechblock group, during recoil, extracts the cartridge case from the chamber, and the ejector ejects it from the gun. During counterrecoil, the breechblock inserts a new round into the chamber and fires it.

Rear buffer and driving springs. The rear buffer stops the breechblock and, with the help of the driving springs, sends it forward in counterrecoil.

Gas cylinder sleeve (and piston). The gas cylinder sleeve group transfers the force of the exploding cartridge to the breechblock slides causing them to recoil, retract the firing pin, and unlock the breechblock.

Cradle. The cradle is the mounting for the gun, and anchors it to the aircraft.

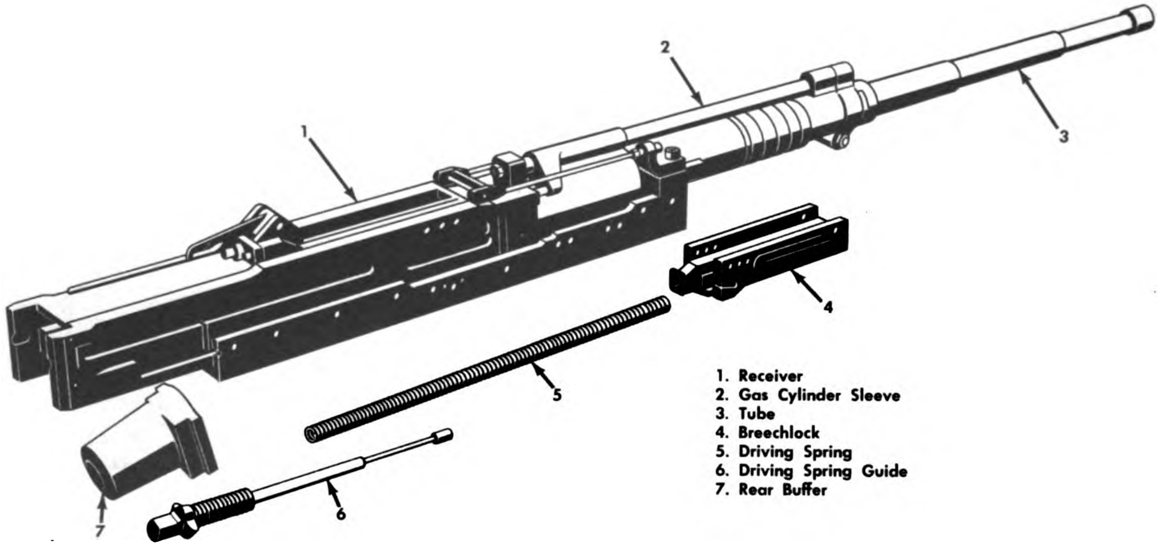

Major Working Groups of the Gun

Digitized by Google

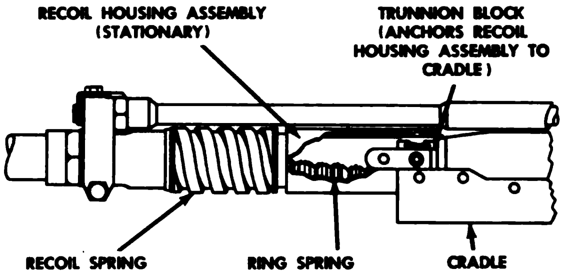

Recoil Buffer System

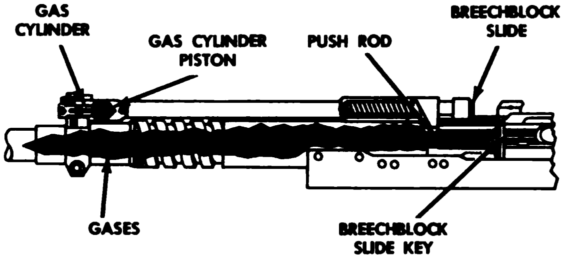

Gas Cylinder Piston Operating the Breechblock Slides

Operation During Automatic Firing

Recoil. After the cartridge is fired, the gun recoils about an inch in its cradle until brought to rest by the springs in the recoil buffer system. The components of this system are illustrated above. The explosion sends the projectile down the gun tube, and after the projectile has passed the gas port, the propellent gases are able to enter the gas cylinder where they exert pressure against the gas piston. The gas piston recoils, and its movement is transmitted by the pushrods to the two breechblock slides, causing them to recoil along their grooves in the sides of the breechblock is shown in upper right of this page. Meanwhile, spring action has returned the gas piston to its original, forward position.

The recoil of the breechblock slides accomplishes two things. First, it retracts the firing pin. The firing pin moves with the breechblock slides because the breechblock slide key, a rectangular bar that extends laterally through the breechblock, connects the firing pin with the two breechblock slides. (This arrangement is a safety feature that keeps the firing pin out of contact with the incoming live cartridge until all recoiling parts have returned to battery.)

In addition to retracting the firing pin, the recoil of the breechblock slides allows the breechblock to unlock. At that instant the cartridge is fired, the *breechblock lock* is in the position shown in the illustration on the left below. Thus, the breechblock is locked in battery position and is kept from recoiling. But, as the breechblock slides recoil, the breechblock lock pops up into a longitudinal slot at the bottom of the breechblock as shown below. This unlocks the breechblock and allows it to be blown back by the gases in the chamber.

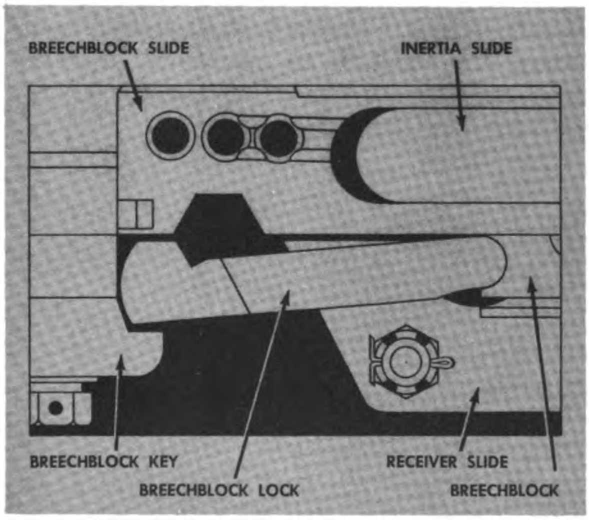

Breechblock Lock in Locked Position

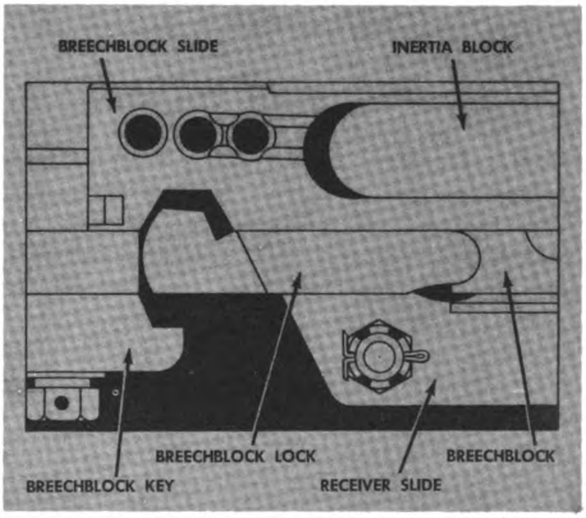

Breechblock Lock in Unlocked Position

Digitized by Google

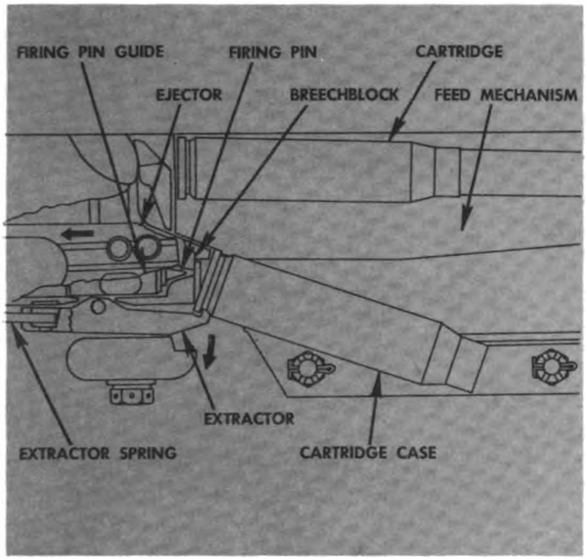

Ejection of the Cartridge Case

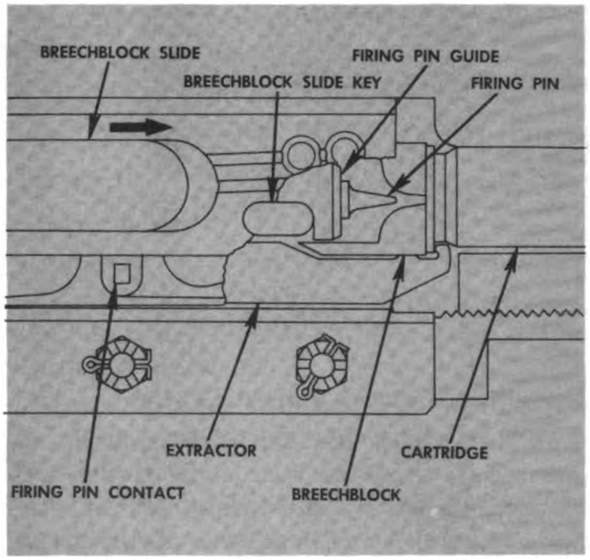

Firing Pin Moving to Fire Round

When the breechblock recoils, the spent cartridge case is removed from the chamber by the combined action of blowback gas pressure and the extractor, which is part of the breechblock group. The cartridge case rides along with the breechblock until the rear of the case strikes the ejector. The impact forces the case to pivot downward and fall out of the gun through an opening in the bottom of the receiver as illustrated above.

The breechblock, meanwhile, continues to recoil until it strikes the buffer at the rear of the receiver. Then the combined spring action of the buffer and the compressed driving springs sends the breechblock forward on its counterrecoil stroke.

COUNTERRECOIL. In the first action occurring during the counterrecoil of the breechblock group, a live round is pushed into the path of the breechblock by the feed mechanism. The face of the breechblock strikes the cartridge and pushes it toward the chamber, and the extractor grasps the rim of the cartridge from below. When the breechblock finishes its counterrecoil, the round is fully chambered and is in the position shown in the accompanying illustration.

The action of the receiver slides and the breechblock slides cams the breechblock downward into the locked position. The breechblock slides, driven by their springs, move forward along the sides of the breechblock and allow the firing pin spring to force the firing pin into contact with the cartridge primer. The breechblock slides are then brought to rest, but the momentum causes the inertia blocks to slip forward and strike the front end of their slots in the breechblock slides. The impact of the inertia blocks prevents any rebound movement of the breechblock slides, and insures a firm contact between the firing pin and the cartridge primer.

With the firing pin in place, the cartridge can be fired by depressing the trigger in the aircraft cockpit. This sends an electric current through the firing pin to the primer, explodes the cartridge, and starts the gun on a new cycle of operations.

Feeding

A 20-mm automatic gun may be fed by one of three models of 20-mm feed mechanisms — the M2, the M2E4, or the M2E5. The illustration at right shows the self-contained M2 unit mounted at the top of the receiver on the magazine slide which is, in turn, anchored to the nonrecoiling gun cradle.

The feed mechanism is operated by the recoil motions of the gun. As the gun recoils and counterrecoils beneath the stationary feed mechanism, the operating lever on the feed

Digitized by Google

mechanism is pivoted by the operating lever bracket on the side of the gun. This lever and bracket are shown in the illustration below. The resulting reciprocating motion of the operating lever winds the driving spring that operates the feed mechanism.

By means of the star-shaped feed wheel, shown in the illustration below, the feed mechanism pulls the ammunition belt toward the gun, at a rate controlled by the rate of the fire. As the feed wheel turns the ammunition belt is carried into the feed mechanism, where the belt links are stripped from the cartridges and discarded from the gun. Further rotation of the feed wheel forces the individual cartridges into the mouth of the feed mechanism, which extends down into the receiver. Each time the breechblock comes forward in the counterrecoil, it strikes the lowest cartridge in the mouth of the feed mechanism and pushes the round toward the chamber. Meanwhile, the feed wheel rotates and forces another round into feeding position.

Complete directions for the installation and maintenance of the 20-mm feed mechanisms are given in TO 11W1-12-2-1.

Preparation for Boresighting

The 20-mm gun can be boresighted with either a breech tool or a muzzle tool, whichever is more convenient for the particular gun installation. Before beginning the boresighting, certain precautions must be taken with the gun to avoid possible injury to personnel and damage to equipment.

Before inserting the muzzle boresighting tool, perform the following:

1. Disconnect the cable leading to the breechblock contact.
2. If ammunition belt is in feed mechanism, remove belt.
3. Disconnect the feed and link chutes and remove feed mechanism from gun.
4. Charge gun to remove live round from chamber. Check to see that the chamber is clear before inserting the boresighting tool.
5. If there is access to the rear buffer of the gun, unscrew the driving spring guide assembly with rear buffer wrench, taking care not to let the driving spring fly back. Remove the driving spring guide and the driving spring from the gun. With the driving spring removed, the breechblock can be pushed to the rear of the receiver and the breech boresighting tool inserted into the chamber without danger of the breechblock driving forward unexpectedly.
6. If there is not sufficient working space to remove the driving spring, retract breechblock to rear of receiver and hold it in that position by either of the following methods.
    a. If using the pneumatic system of the aircraft, place the gun charger switch on CHARGE. The breechblock will be retracted and remain in that position until the charger switch is moved to RELEASE, provided normal pressure is maintained in the pneumatic system.

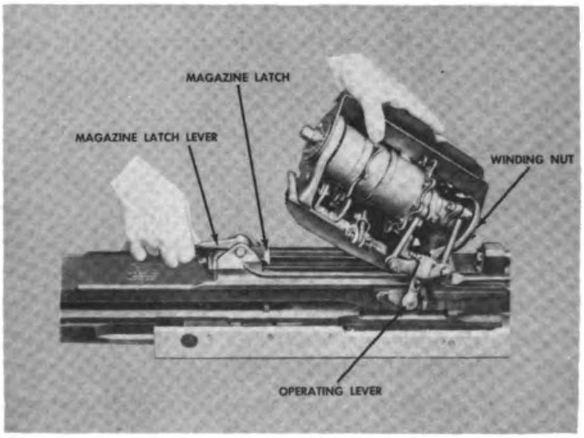

Installation of the 20-mm Feed Mechanism M2E1

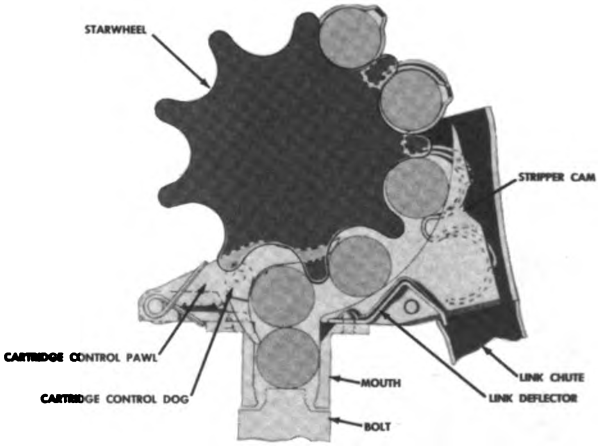

Action of the 20-mm Feed Mechanism M2E1

Digitized by Google

b. If an external source of pneumatic pressure is used, the breechblock can be retracted and held by placing the operating valve in an open position, so that a constant pressure is exerted against the piston head of the charger.

An additional precaution should be taken when holding the breechblock retracted by means of pneumatic pressure: insert a flat steel rod or screwdriver longitudinally through the gun at the forward end of the charging lug slots. This will prevent the breechblock from driving forward in case the holding pressure is accidentally released.

Loading Procedure for Automatic Firing

1. Make sure the main armament switch is at OFF.

2. With the feed mechanism, link chute, and feed chute in place, draw the ammunition belt, empty single loop first, through the feed chute until the first round engages the teeth of the star wheel.

3. While pushing belt toward the feed mechanism with one hand, rotate the main drive shaft of the feed mechanism with a wrench in the direction of feed until the drive spring is fully wound and a round is forced into the mouth of the feed mechanism. This operation is shown to the left below. The gun can now be changed and will load automatically.

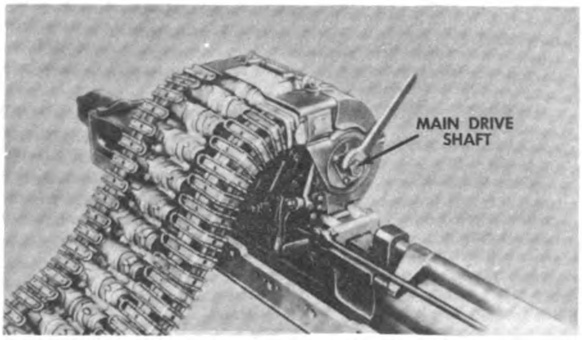

Loading the 20-mm Feed Mechanism M-2

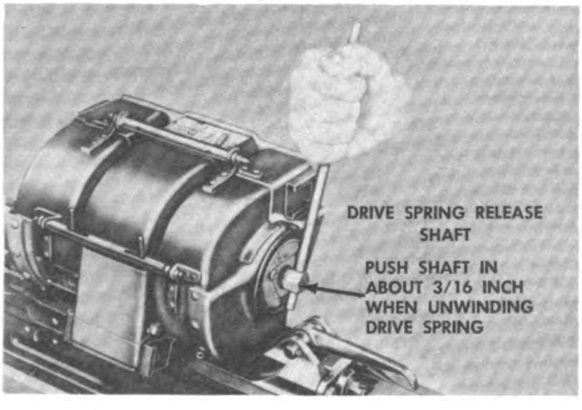

Unloading the 20-mm Feed Mechanism M-2

Loading for Test Firing

A convenient method for loading and firing single rounds from the 20-mm gun is to construct an ammunition belt with alternating live and dummy rounds. The belt is loaded into the gun as described above. The dummy round following each live round causes the gun to fire a single round then misfire. By charging the gun, the dummy round can be ejected and a live round chambered when it is desired to fire another shot.

This procedure can be varied so that the gun will fire a burst of specified length by placing a dummy cartridge in the appropriate position in the ammunition belt. For example, if a dummy round follows 10 live rounds in the belt, the gun will fire a burst of 10 rounds and then stop.

Unloading

1. Make sure the master armament switch is at OFF.

2. If ammunition belt has not been completely expended, insert a rod into protruding end of drive spring release shaft in manner illustrated to the left. Push the shaft about $\frac{3}{16}$ inch toward feed mechanism and, at the same time, turn shaft about three-quarters of a turn in direction opposite to direction of feed. This completely unwinds the drive spring and the ammunition belt can then be removed from the feed mechanism.

3. After disconnecting the feed and link chutes, disconnect the operating lever of feed mechanism from bracket on side of gun, raise magazine slide lever, and remove feed mechanism from gun. If there is a round in the mouth of the feed mechanism, remove the round by pushing it forward until it drops out of the mechanism.

4. Eject live round in chamber by charging the gun. Make certain that the round leaves the gun.

20-mm Automatic Gun, M39

Maintenance

The accuracy and effectiveness of the 20-mm gun depends on the proper functioning of its many precision parts. Automatic firing subjects these parts to severe stresses that will rapidly reduce their life, unless constant care is taken to maintain them in good working order.

Preventive maintenance is a basic part of the gun care. Rust, dirt, and other abrasive agents must not be allowed to accumulate in the gun, otherwise the moving parts will wear down rapidly and will require frequent replacement. Good maintenance calls for cleaning the gun after every firing to remove primer salts and residual cartridge metal, as well as for routine attention between firings to prevent the formation of rust and other destructive materials.

20-MM AUTOMATIC GUN, M39, (T160)

The T160 (standard issue item designated M39) 20-mm automatic gun is a gas-operated, belt-fed, electrically fired weapon. A view of this weapon is given above. By replacing key parts and relocating others, the gun may be assembled so that it may be fed from either the left or right side. The gun is capable of firing electrically primed ammunition at the rate of 1,500 rounds per minute and develops a muzzle velocity of 3,250 feet per second. The assembled gun weighs 179 pounds and has an overall length of 72.4 inches.

Components

Each of the separate major components of the 20-mm automatic gun, M39, is shown in the picture below. The functions of these various parts are described on the following pages.

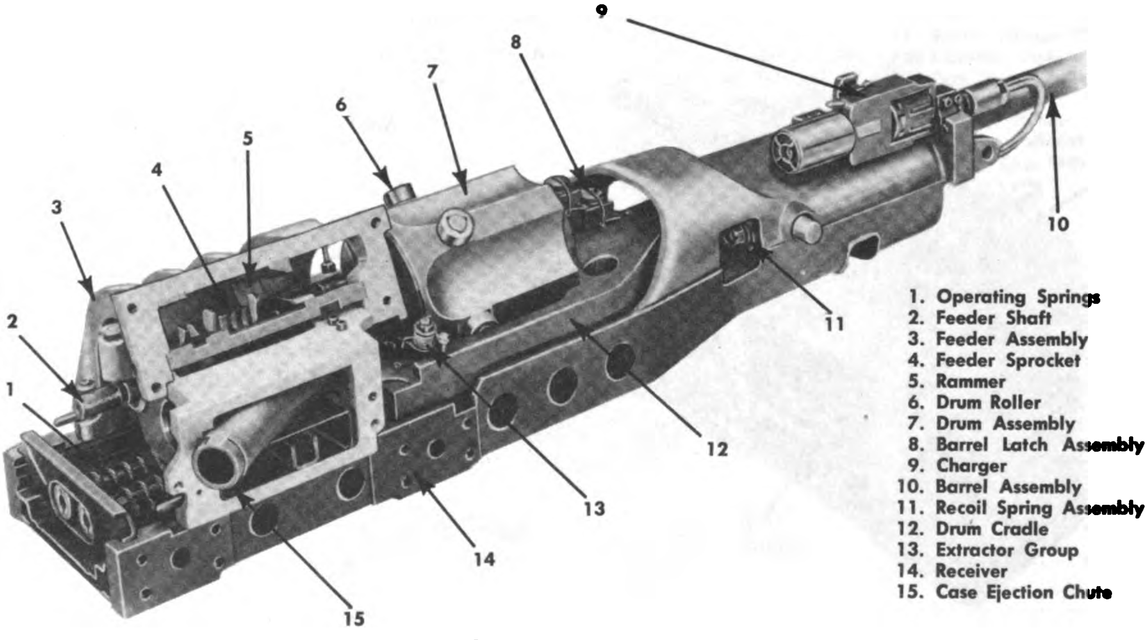

Components of Gun

Digitized by Google

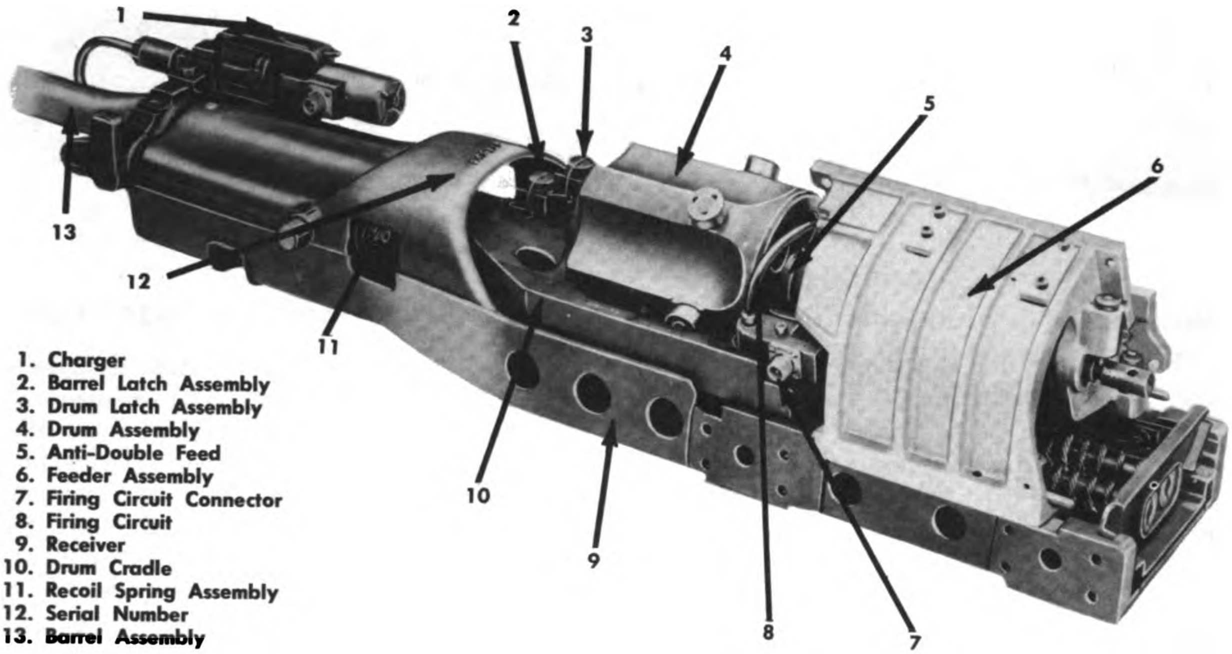

1. Charger
2. Barrel Latch Assembly
3. Drum Latch Assembly
4. Drum Assembly
5. Anti-Double Feed
6. Feeder Assembly
7. Firing Circuit Connector
8. Firing Circuit
9. Receiver
10. Drum Cradle
11. Recoil Spring Assembly
12. Serial Number
13. Barrel Assembly

Components of Gun

Receiver. The receiver is the basic unit of the gun. A casting at the forward end houses the barrel, cradle bearing, recoil spring groups, and gas tube. The rear area of the receiver accommodates the feeder assembly and the drum cradle. In the base of the receiver are the operating slide and switch cam ways.

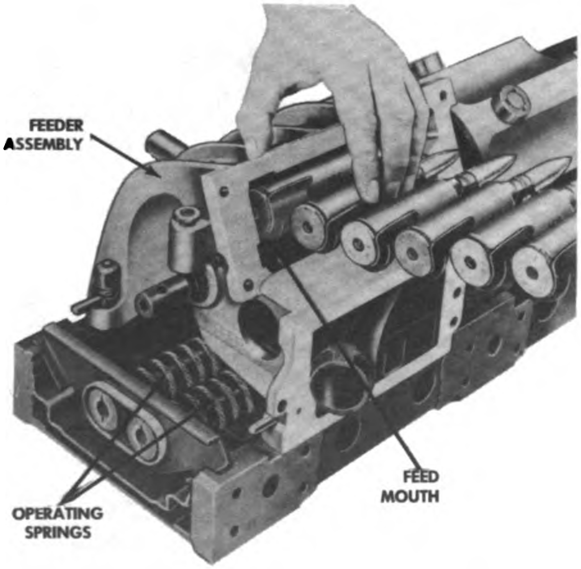

Feeder Assembly Installed on Receiver

Feeder assembly. The feeder assembly is installed on the receiver as shown below. It positions the round for ramming, deflects the extracted cartridges away from the gun and ejects the empty links. The feeder shaft is attached to the drum shaft and is operated by motion of the drum assembly. Each of the elements mounted on the feeder shaft has a specific function in feeding the round for chambering.

Barrel assembly. The barrel assembly, shown below, is a recoiling component of the gun and consists of the tube and orifice. It extends through the forward end of the receiver and drum cradle to the forward face of the drum assembly. It is supported at two points, in place, by a close fitting bore in the drum cradle and in another, by a similar bore at the forward end of the receiver. The barrel assembly is retained in the drum cradle by

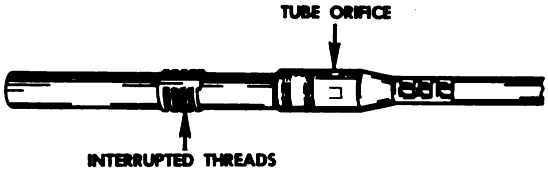

Barrel Assembly

Digitized by Google

interrupted threads. These threads offset the force exerted on the breech face of the tube by the drum seals and the forward frictional force of the projectile during firing. The barrel latch assembly locks the barrel assembly in place to prevent rotation of the barrel assembly.

Cradle group. The central recoiling unit of the gun is the drum cradle. It is guided in recoil and counterrecoil by the L-slots of the receiver and by the forward bearing of the receiver in which it is seated. Both the barrel assembly and drum assembly are secured to the drum cradle, making the three units recoil as a unit. The drum cradle also serves as a mount for the firing circuit, the extractor group, gas cylinder group, firing pin and anvil assembly, and the barrel and drum latches. The drum cradle is connected to the recoil springs which limit the rearward movement of the recoiling units.

Drum group. The drum assembly rotates on the drum shaft within the drum cradle. It has five chambers which are brought into firing position in succession when firing the gun. When the drum assembly is properly installed in the drum cradle, the forward face of the chamber in the 6-o'clock position contacts the breech face of the tube which extends through to the inside face of the drum cradle. During firing, the seals in the forward end of the drum assembly are forced against the breech face of the tube by propellent gases, thus preventing serious leakage of gas. Five circumferential grooves on each seal prevent gas leakage between the seals and the seal recess of the drum body. A seal retained holds the seals in the drum and prevents them from entering the bore of the drum cradle if the barrel assembly is removed.

Operating slide and switch cam. The operating slide and switch cam ride in the bottom of the receiver. The switch cam is a recoiling part of the gun since it is attached to the drum cradle. The switch cam causes the switch tongue of the operating slide to pivot during cycling, thereby changing the cam path in the operating slide. Mounted on the operating slide is the striker for actuating the extractor, the contact blade for breaking the electric circuit, the rammer for stripping and chambering, and the extractor cam for activating the extractor. The cam path, machined into the operating slide, engages the rollers of the drum assembly to cause drum rotation during cycling. The operating slide and switch cams are shown in the illustration below.

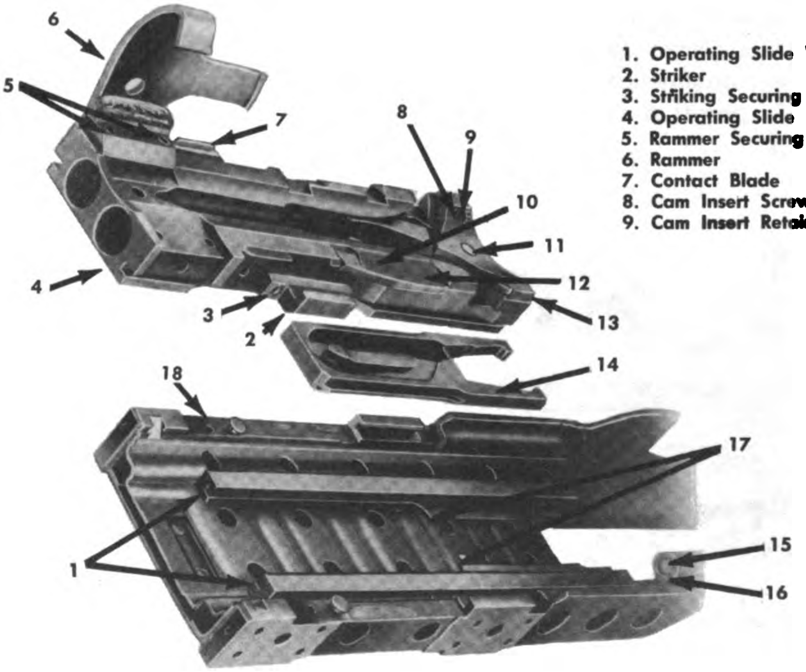

1. Operating Slide Ways
2. Striker
3. Striking Securing Screw
4. Operating Slide
5. Rammer Securing Screw
6. Rammer
7. Contact Blade
8. Cam Insert Screw
9. Cam Insert Retaining Pin
10. Extractor Cam Pin
11. Switch Tongue Pivot Stud
12. Extractor Cam
13. Cam Insert
14. Switch Cam
15. Charger Piston
16. Charger Cylinder
17. Switch Cam Ways
18. Receiver

Operating Slide and Switch Cam Removed from Receiver

Digitized by Google

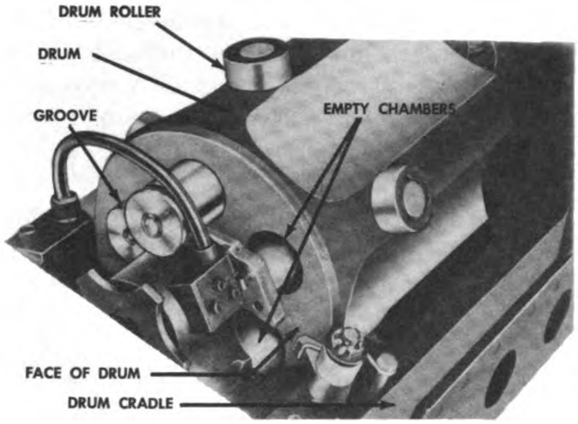

Empty Chambers in the Gun

Recoil spring and gas tube groups. The recoil spring groups are housed in the forward casting of the receiver. They limit both recoil and counterrecoil forces. The recoil distance, for instance, is limited to approximately ¼ inch. The gas tube group directs the flow of gas from the tube to the gas cylinder in the drum cradle.

Operation During Automatic Firing

Each time a cartridge is fired, the mechanical action within the gun involves many parts moving simultaneously or in their proper order. The action of these parts and their relationship, one to the other, can be explained more clearly when the cycle of operation is divided into various phases. For convenience and clarity, then, the cycle of operation is divided into the following phases:

Firing.
Gas action.
Recoil and counterrecoil.
Drum indexing.
Breaking electric circuit.
Ramming and round retaining action.
Indexing to firing position.
Extraction.
Antidouble feed action.
Feeding.

Each of these separate phases of the action of the gun during automatic firing is described below.

Firing. The drum of a gun which is ready to fire has been charged the necessary three times and contains three rounds. One round is fully chambered, ready to fire, at the 6-o'clock position, in line with the tube bore. One round is completely chambered ready to be indexed to the 6-o'clock position for firing. And one round is rammed from its link in the feeder and partially entering the alined chamber of the drum. The two chambers before the 6-o'clock position are empty as shown in the illustration above.

In order to fire, the operating slide must be *in battery* (completely forward) and the firing circuit must be complete. The firing circuit connects to a 200-300-volt direct-current or alternating-current power supply.

When the chambered round is in the *6-o'clock position*, its forward end seats in the drum seal, while the primer, at the rear of the cartridge, is in contact with the firing pin.

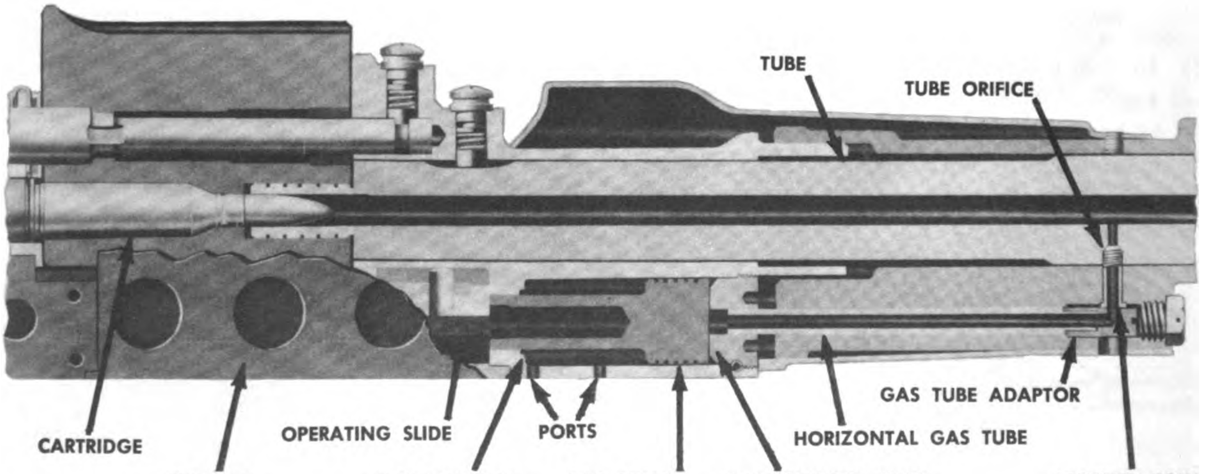

Cutaway Section of Gun

Digitized by Google

This is the position of the round in the illustration on the previous page. The firing pin and anvil assembly supports the case of the cartridge during firing. The chambered cartridge protrudes from the rear face of the drum a slight amount, making the groove around the base of the round visible.

When the firing switch is depressed, current flows through the firing circuit and firing pin to explode the primer. This explosion in turn explodes the charge in the cartridge.

GAS ACTION. The propellent gas expands in the drum chamber and tube as the projectile travels forward. After the projectile passes the tube orifice, a portion of the gas passes into the tube orifice, then through the receiver orifice into the gas tube adapter. The gas tube adapter is drilled with two connecting right angle holes and joins the vertical receiver orifice to the horizontal gas tube.

The gas tube enters the gas cylinder of the cradle, which is a recoiling part, through the gas cylinder plug. Clearance is provided between the hole in the gas cylinder plug and the gas tube to permit motion between the recoiling gas cylinder (in cradle) and the stationary gas tube.

The propellent gases in the gas cylinder force the gas piston to the rear, and this piston, in turn, moves the gas piston shaft backward. Circular grooves around the piston head keep leakage of gas past the gas piston to a minimum

Two ports which extend into the gas cylinder are machined into the bottom of the drum cradle. The rear port allows trapped air to be expelled as the piston is forced to the rear, and the forward port acts as an exhaust for the operating gases after the piston has completed its rearward motion.

RECOIL AND COUNTERRECOIL. The recoil forces developed upon firing act directly upon the drum cradle forcing it rearward. The barrel assembly, drum assembly, and drum cradle group constitute the recoiling parts of the weapon.

Recoiling forces acting rearward are transmitted to two recoil spring assemblies housed in the receiver, one on each side of the barrel. These springs compress, thus absorbing the recoil of the drum cradle group and limiting its backward movement to ¼ inch. A shoulder in the receiver furnishes seats for the recoil springs. Their shafts extend through two yokes on the drum cradle and are locked in place by a threaded nut and washer.

The other end of the recoil springs bear against retainers screwed into the front face of the receiver. There can be no free movement of the recoiling parts, in either direction, without compression of the recoil springs. The springs are double-acting and limit the counterrecoil forces as well as the recoil forces.

DRUM INDEXING. The rotational motion of the drum assembly, necessary for indexing the rounds from station to station, is derived by the action between the drum rollers and the cam path of the operating slide.

Machined into the operating slide are two cam paths which guide the drum rollers. These two cam paths parallel each other, then turn away from each other on a curve.

Mounted between the two cam paths is the switch tongue. The position of this tongue determines which cam path the drum roller will follow.

The switch tongue is moved at the proper time and to the proper side by the switch cam. This cam is located beneath the operating slide and is attached to the drum cradle. It recoils in unison with the drum cradle.

When the gun is ready to fire, the operating slide is in its forward position, the switch tongue is on the left side, and a drum roller is engaged by the straight portion of the cam path. When the round is fired, the operating slide is driven rearward. The drum roller follows the cam path of the slide.

As long as the drum roller engages the straight portion of the cam path, the drum will not rotate. This keeps the drum stationary for the first 2 inches of rearward travel of the operating slide, maintaining alinement of the drum chamber with the tube while the projectile is moving out the bore.

With the switch tongue to the left, the drum roller is forced to follow the cam path curve to the right. This rotates the drum in a counterclockwise direction.

Digitized by Google

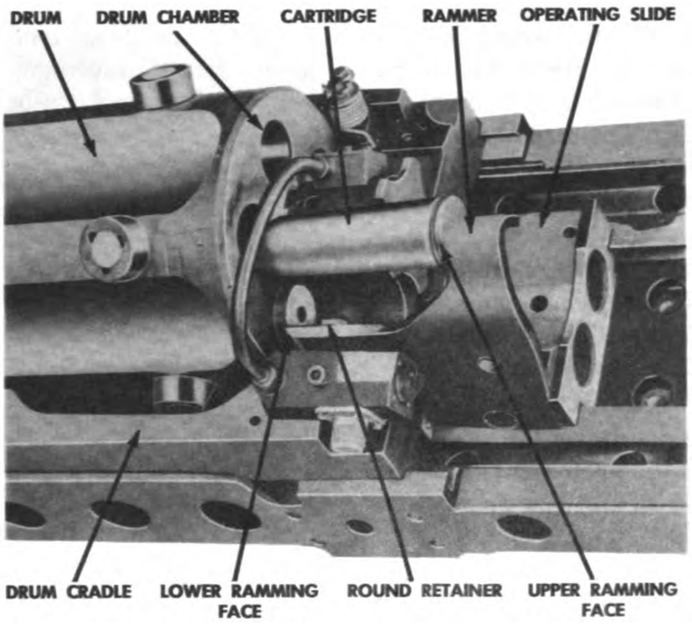

Ramming Action of Gun

At the time the active roller clears the right side cam path, the adjacent roller has been rotated by the drum into a position where it enters the cam path on the left side. At the same time, the switch tongue is cammed to the right to permit the entering roller to move on into the straight portion of the cam path as the operating slide is returned to battery position. To complete the cycle, the switch tongue is cammed to its left position again, after the drum roller has entered the straight portion of the cam path.

Breaking electric circuit. When the operating slide is driven rearward, the contact blade assembly attached to the operating slide is withdrawn from the female contact of the firing circuit below the drum cradle. This action breaks the electric circuit and prevents current from flowing in the circuit until contact is made by the blade when the slide returns to battery.

If the circuit were complete, a round could be fired prematurely since its edge contacts the electrically energized firing pin when the round is brought into firing position.

Ramming and round-retaining action. Ramming is accomplished in two stages by means of the rammer shown attached to the operating slide in the illustration above. The first stage occurs upon firing. The operating slide is driven rearward, and the drum's indexing positions an empty drum chamber in the path of the upper ramming face. As the slide returns to battery, the upper ramming face contacts the base of the positioned cartridge in the feeder, pushing the cartridge from its link and partially seating the round in the alined drum chamber.

As the next round is fired, the drum indexes again and rotates the previously partially chambered round into the path of the lower ramming face. The lower ramming face drives this round into the chamber. At the same time the upper ramming face is extracting another round from its link.

As the round is being chambered by the lower rammer face, it passes over and depresses the spring-loaded round retainer, positioned on the rear of the drum cradle. After the round has passed over the round retainer, the round retainer snaps upward and bears against the base of the completely chambered round, holding it in position.

Indexing to firing position. When the drum indexes again, upon firing of a round, the round that had been held by the round retainer moves to the battery position (6-o'clock) where it is in alinement with the tube bore and the firing pin.

Digitized by Google

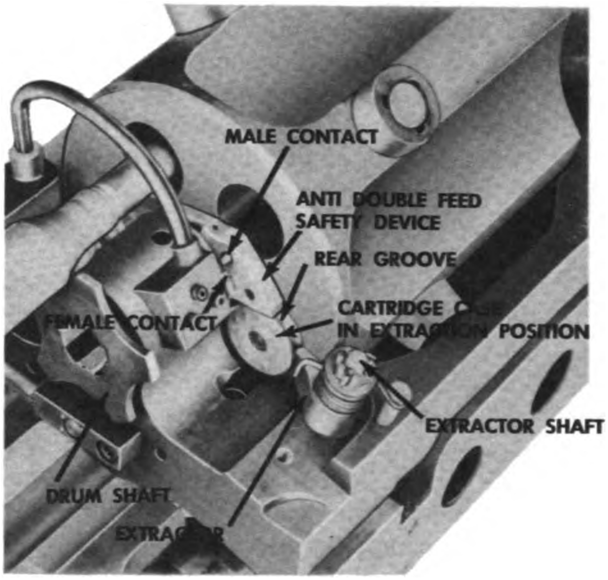

Cartridge Case Indexed for Extraction

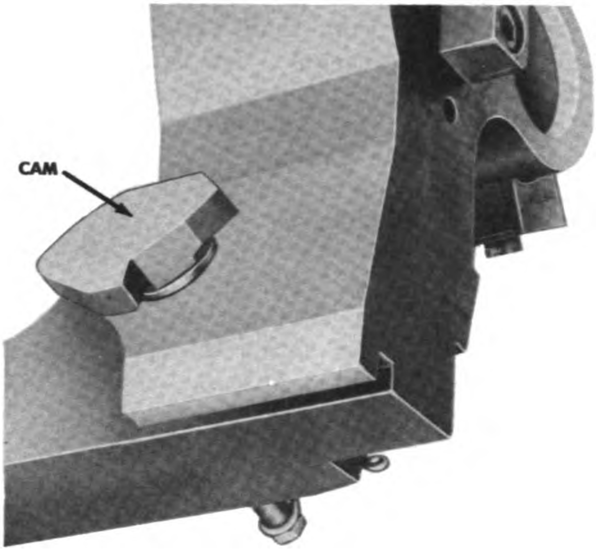

Cam on Extractor Shaft

As the round is brought across the face of the firing pin anvil, the cartridge strikes the edge of the protruding firing pin spring. When the round is properly located in the 6-o'clock position, the firing pin contacts the primer of the cartridge.

Extraction. After being fired, the cartridge case is indexed into position for extraction as shown above. When the cartridge case is indexed, the rear groove extends outward from the drum where it is engaged by the extractor.

The extractor is operated by the striker as the operating slide to which the striker is attached approaches battery position. As the slide comes into battery and the next roller enters the straight portion of the cam path, the drum ceases to rotate. It is at this point, about 1¾ inches out of battery, that extraction takes place.

At this point, the striker hits a cam on the lower end of the extractor shaft. The cam is shown at the upper right. This action causes the extractor, splined to the upper end of the shaft, to rotate. The rotation of the extractor, shown in the illustration to the right pulls the cartridge case from the chamber, forcing it down the case ejection chute. The slide continues into battery position, and the striker holds the extractor in the retracted position.

The striker releases the extractor when the operating slide returns rearward. The extractor cam attached to the operating slide rotates the extractor back to its original position, bearing against the drum face.

Antidouble feed action. This gun is equipped with an antidouble feed safety device which prevents subsequent firing of a new round, in the event a cartridge case is not extracted with enough energy to clear the drum chamber.

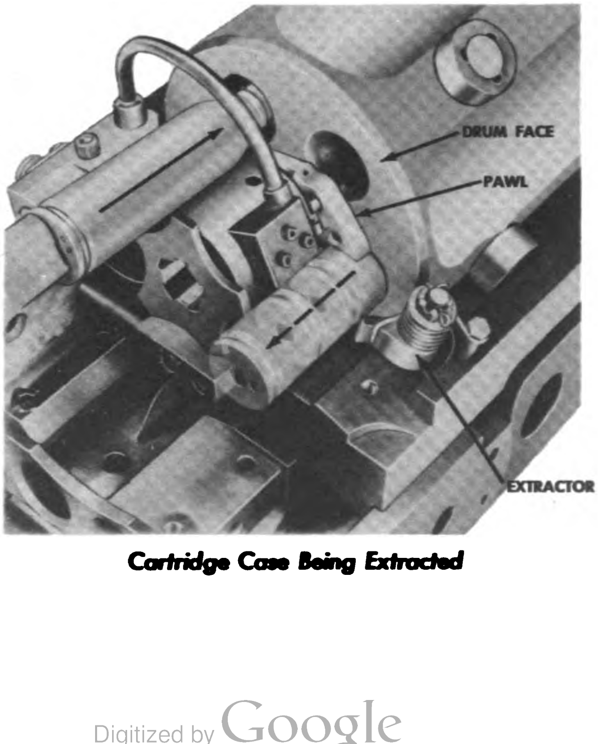

Cartridge Case Being Extracted

Digitized by Google

The pawl of the antidouble feed device pivots on the drum shaft and has a male contact which engages a female contact on the firing circuit assembled to the drum cradle. The pawl of the antidouble feed device extends into the path of the cartridge case being indexed into extraction position. As the cartridge case enters the extraction position, it hits the pawl and rotates it upward. This separates the two contacts, breaking the electric circuit. When the case is extracted, the antidouble feed spring returns the pawl to its original position, once again completing the electric circuit.

Later model M39 guns have a mechanical antidouble feed stop which prevents the drum from rotating if the empty case has not been fully extracted from the drum. This makes the electrical antidouble feed switch and the ADF junction box of the firing circuit unnecessary.

FEEDING. The feeder assembly on this weapon is the disintegrating link type. It positions the round for ramming, ejects the empty links and deflects the extracted cases as they are forced rearward.

All the moving members of the feeder are mounted on the feeder shaft. The feeder shaft is attached to the drum, and cycles with it.

The ammunition belt enters the feed mouth at the top of the feeder at an angle of 25° above the horizontal, where it is engaged by sprockets.

The round is positioned in alinement with the drum chamber. The rammer attached to the operating slide contacts the base of the positioned cartridge, pushing the cartridge from its link.

After ramming, the empty links continue around the sprockets and leave the feeder through an opening. As soon as an empty link leaves the feeder, it separates from the one directly behind it, which is about to leave the feeder. Ejected empty links no longer form a belt.

Loading

Belts for the M39 gun are made up of metallic links. There is no difference in the belting procedure for left hand or right hand feed. In belting for right hand feed, however, the connecting eye from the link of the first round should be removed to prevent the possibility of a jam in the feeder sprockets. The belt should be tested for flexibility by turning the completed belt over, grasping the last round, and drawing it across the rest of the completed belt. Any faulty link will cause the belt to kink instead of folding over smoothly. Any link whose connecting eye does not allow the round to hinge freely must be replaced by another link and the test repeated. The test must be performed in both directions, from left to right and from right to left.

The loading procedure is as follows:

1. Before loading the gun, be sure that the power supply to the firing circuit is disconnected.

2. Slide belt down feed chute into feed mouth of feeder assembly. Be sure that the link guide tabs position themselves under the L-slot of the link guide and the round rests firmly against the feeder sprockets as shown in the illustration below. Maintain pressure

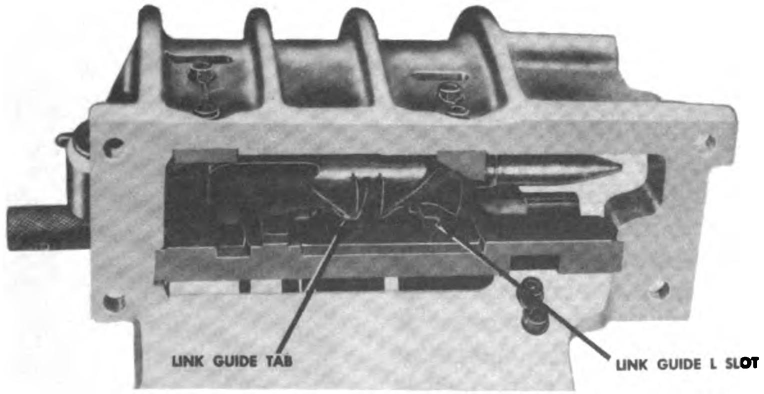

Feeder Assembly (Right Hand Feed)

Digitized by Google

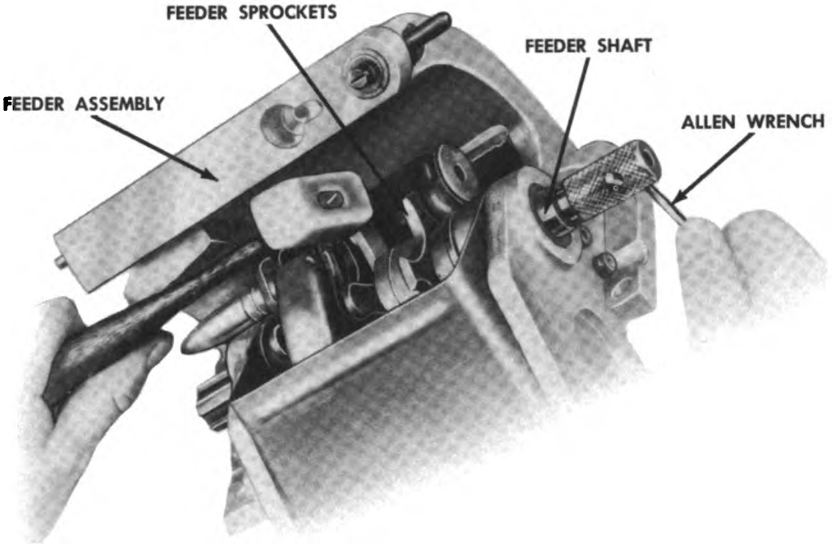

Unloading Ammunition Belt from Feeder Assembly (Right Hand Feed)

against the rounds in the feeder assembly by pushing against the external rounds.

3. Cycle the operating slide by using a charging cable connected to the operating slide rammer. This allows the operating slide feed rammer to remove one round from the belt and partially chamber it in the drum.

4. Cycle the operating slide a second time. This completes chambering of the first round and also feeds a second round to the first drum position.

5. Cycle the operating slide a third time. This positions a round in the 6-o'clock firing position of the drum assembly.

6. Connect the power source to the firing circuit connecter, being sure the firing switch in the aircraft is in the OFF position. The gun is ready for firing when the firing switch is ON and the trigger is depressed.

Unloading

Before unloading, be sure that the power supply to the firing circuit is turned off.

1. Disconnect the feed chute from the feeder assembly.

2. Remove feeder assembly from the gun with what remains of the ammunition belt. Turn the feeder assembly over on a table and allow the belt to hang over the table edge, creating a drag on the feeder sprockets.

3. Insert some suitable object such as a drift or Allen wrench through the hole at the rear of the feeder shaft as shown in the illustration above. Apply pressure by rotating the shaft clockwise (looking from rear). This operation applies to a right hand feed.

4. Using a brass or hard rubber hammer, tap the feeder sprockets until the round positioned in the feed mouth is released.

5. Remove operating springs.

6. Grasp rammer on operating slide and cycle operating slide three times to remove three rounds which are still in the drum assembly.

Maintenance

The importance of a thorough knowledge of how to clean and lubricate the gun cannot be overemphasized. The kind of attention given determines whether the gun will shoot accurately and function properly when needed.

Rust, grit, dirt, gummed oil, and water cause rapid deterioration of all parts of the materiel. Particular care should be taken to keep all bearing surfaces and exposed parts clean and properly lubricated. Remove all traces of rust from surfaces with crocus cloth.

Digitized by Google

Loose parts should be tightened, unserviceable parts replaced, and lock washers, safety wire, cotter pins, and other locking devices properly applied.

Do not dip or wash the recoil spring assembly or the operating springs in dry-cleaning solvent or volatile mineral spirits. These units are lubricated by the manufacturer, and if the special lubricant is diluted, early failure of the units will result.

A check should be made to insure that technical orders are complied with, and that AF form 185 is complete.

Detailed information on maintenance is contained in TO 11W1-12-2-11.

20-MM AMMUNITION

The ammunition for 20-mm automatic guns is classified as artillery ammunition and is issued in the form of complete rounds of "fixed" ammunition. The term "fixed" signifies that the propelling charge is fixed (not adjustable) and that the round is loaded into the weapon as a unit. A complete round (cartridge) consists of all the components necessary to fire the weapon once. It includes a projectile, cartridge case, propellent powder, and electric primer. In the HEI (high explosive incendiary), a fuze is also part of the fixed ammunition.

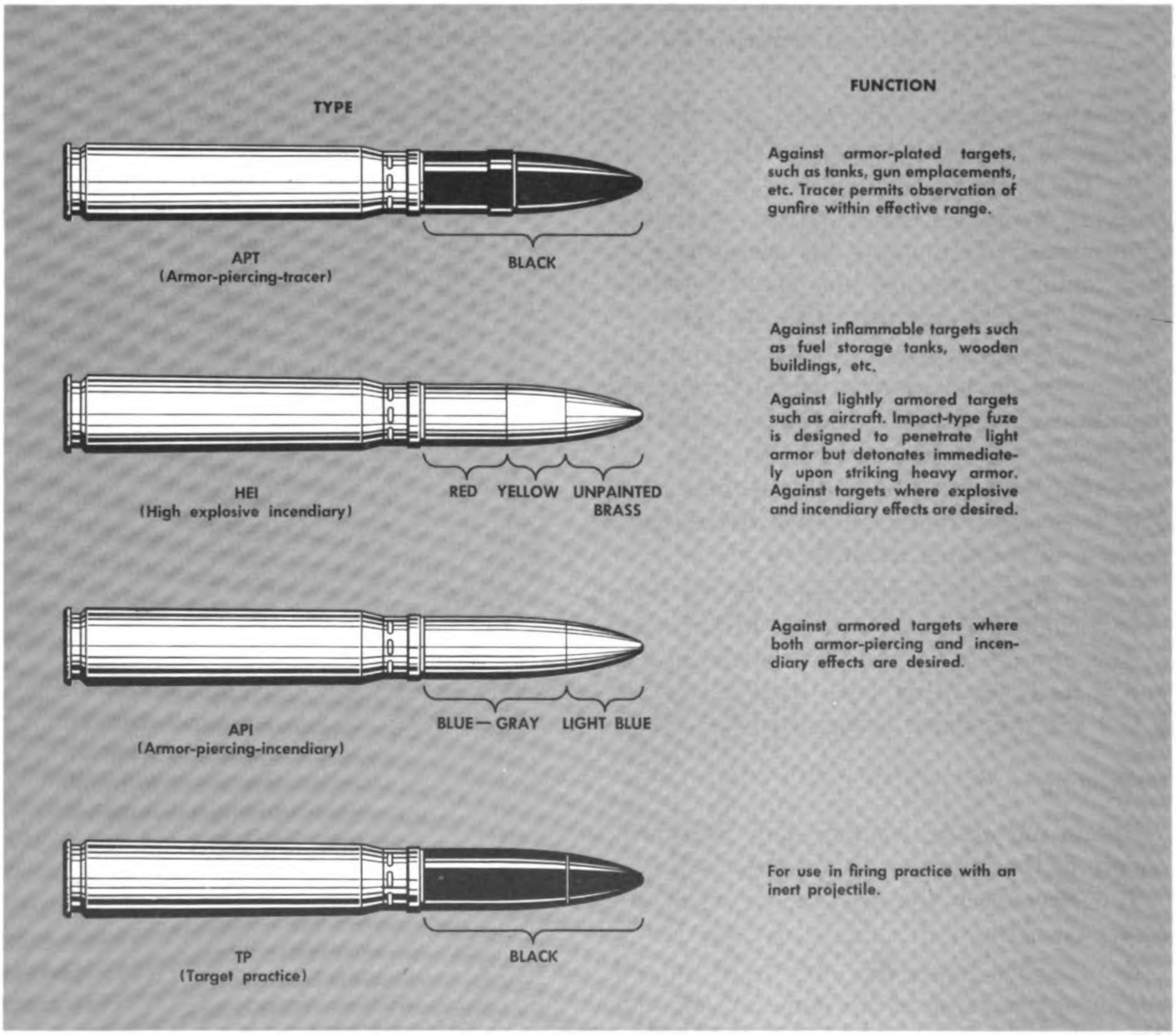

Against armor-plated targets, such as tanks, gun emplacements, etc. Tracer permits observation of gunfire within effective range.

Against inflammable targets such as fuel storage tanks, wooden buildings, etc.

Against lightly armored targets such as aircraft. Impact-type fuze is designed to penetrate light armor but detonates immediately upon striking heavy armor. Against targets where explosive and incendiary effects are desired.

Against armored targets where both armor-piercing and incendiary effects are desired.

For use in firing practice with an inert projectile.

20-mm Cartridges

Digitized by Google

Based upon the type of projectile with which rounds are assembled, and use thereof, ammunition is classified as follows:

In addition cartridges are available for demonstration and drill purposes.

Ammunition for M24A1

HEI-M97 (with fuze, PD, M75)
HEI-M97 (with fuze M505)
HEI-M58(T216)
Incendiary, M96
TP, M99

Ammunition for M39 (T160)

API-T221E2 (M53)
APIT-T230 (M52)
HEI-T198E1
TP-T199 (M55)
T288 (M58, dummy) used for drill and demonstration
Grenade, carbine, cal .30, M6 (used in percussion charger, T13)
Link, metallic belt, T61E3

Fuzes

The fuze used with the HEI is assembled to the cartridge as issued. A boresafe fuze is one in which the explosive train is so interrupted that, while the projectile is still in the bore of the weapon, premature action of the bursting charge is prevented should any of the more sensitive elements (primer or detonator) function.

	Boresafe	*Not Boresafe*
M505	used with HEI, T918E1 (M39)	PDM75 used with HEI, M97, (M24)
M505	used with HEI, T216, (M24) used with HEI, T198	

CAUTION

Fuzes will *not* be disassembled. Any attempt to disassemble fuzes in the field is very dangerous and is prohibited. Fuzes require no setting.

Care and Handling

Care and handling of ammunition is discussed in the next section.

CARE AND HANDLING OF AMMUNITION

Common sense and reasonable care are the best guarantees for avoiding trouble in handling ammunition. Here are some good safety rules to keep in mind.

a. When handling ammunition, avoid striking or tampering with the primers, because primers are especially sensitive to shock.

b. Never try to disassemble a live round.

c. Do not keep duds for souvenirs. They are dangerous.

d. Before loading guns, check the ammunition and the belt for dirt, grease moisture and other foreign materials. These substances are a potential source of trouble in any gun, especially in an automatic weapon.

e. Keep ammunition in unopened containers until it is needed. Opened containers should be covered to protect the ammunition from dirt, moisture, and other substances that can cause damage to the gun.

f. Store ammunition in a cool, dry place, and never in the direct rays of the sun.

g. When it is necessary to leave ammunition in the open, raise it on dunnage at least 6 inches from the ground and cover it with a double thickness of tarpaulin, leaving enough space for circulation of air.

h. Store 20-mm ammunition away from electric wiring and other sources of electricity.

i. Dispose of faulty ammunition and duds as directed in TO 11A-1-20.

ROCKETS AND LAUNCHING EQUIPMENT

Aircraft rockets put a big punch in fighter armament. When armed with a load of rockets, a fighter aircraft becomes a potent weapon that combines speed and maneuverability with the firepower of an artillery piece. The result is "flying artillery" that can quickly and effectively strike at distant targets with high-velocity, large caliber projectiles.

Heretofore, because of the severe recoil forces generated and the lack of suitably compact guns and gun mounts, the size of the projectile that could be conveniently fired from *fighter* aircraft has been limited to 37 mm — about 1.4 inches in diameter. Yet the

Digitized by Google

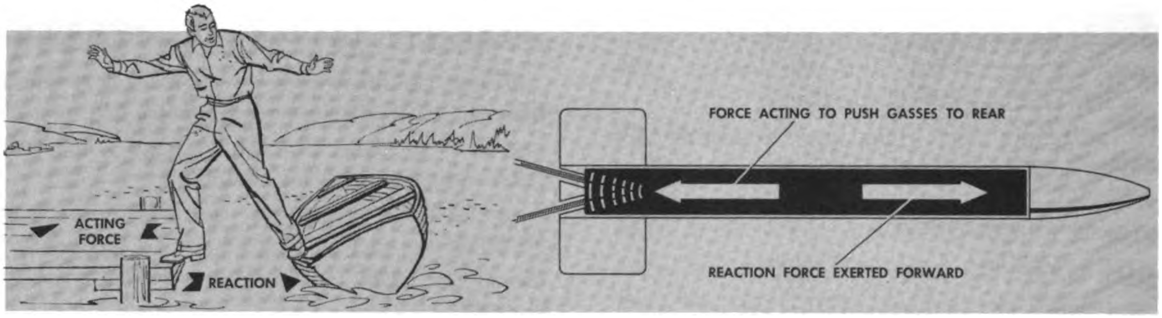

Reaction Causes the Boat to Move Away from the Dock and the Rocket to Move Forward

same types of aircraft, equipped with simple lightweight launchers, can carry and fire rocket projectiles with diameters of 11 inches and more.

This increase in firepower without the accompanying handicaps of large, heavy firing devices is an important advantage that stems from the recoilless takeoff of the rocket. When a rocket is launched, the rocket motor, which propels the rocket, produces a thrust that acts only on the projectile. As a result the launching aircraft experiences none of the recoil it feels during gunfire, and the size of the rocket projectile that can be launched is governed mainly by the size of the projectile that can be conveniently carried.

The "shot gun" effect of most rocket launchers gives a much greater hit probability with each rocket.

Principles of Rocket Propulsion

To understand the characteristic lack of recoil of rockets, it is necessary to consider how the rocket motor works. The motor consists essentially of a combustible fuel (the propellent) and an igniting device placed in a tube. The tube, which forms the combustion chamber for the propellent, is closed at the front end and has constricted openings, called nozzles, at the rear. A motor of this sort is called a *reaction motor*, because its operation is based on a fundamental law of motion, the *law of action and reaction*. According to this law, whenever a force acts in one direction, a reaction force of equal size is generated in the opposite direction. It explains why, when a bullet is fired, the gun recoils, or why, when an automobile moves forward on a gravel road, the gravel is thrown out behind the wheels.

The illustration shows what happens when a person attempts to step to a dock from an unmoored boat alongside. As he shifts his weight dockward to step from the boat, it moves in the opposite direction, away from the dock. The motion of the boat is therefore a reaction to the force used to push the body's weight out of the boat.

The principle of action and reaction explains the operation of the rocket motor. When the fuel is ignited, the combustion gases build up a pressure inside the rocket, because they accumulate at a faster rate then they can flow through the restricted nozzle openings at the rear of the motor. As a result, there is a net force inside the rocket pushing the combustion gases toward the exhaust nozzles at the rear. This force causes a reaction force to be exerted against the front end of the rocket as shown. The result of the reaction force is to accelerate the rocket forward, an effect that continues until the fuel supply is exhausted.

Bear in mind that the forward motion of the rocket does *not* depend on the jets of combustion gases pushing against the air behind the rocket. (In the same way, the boat moves away from the dock.) Rather, the forward motion of the rocket is a *reaction* to a force that is exerted toward the rear. Since the rocket motor needs no "toehold" against the air, it could function perfectly well in a vacuum, which is completely airless. In fact, a rocket is more efficient at higher altitudes because there is less air resistance to retard its flight.

Rocket Components

Aircraft rockets vary considerably in the details of their construction, so that no list

Digitized by Google

of components can be given that applies to all types of rockets. The major components which most rockets have in common are described in the following paragraphs.

ROCKET HEAD. The rocket head is the explosive or destructive part of the rocket. It usually is constructed as a separate unit, which is later attached to the forward end of the motor tube when the rocket is assembled. Depending on their intended use, rocket heads may have any of the following types of fillers: high explosive (HE), shaped charge or high explosive antitank (HEAT), chemical, and plaster or unfilled, for practice use.

FUZES. Fuzes are incorporated into the rocket heads of most rockets to detonate the relatively inert explosive at some precise instant after the rocket strikes the target. Fuzes also act as safety devices, because they remain inoperative until the rocket has reached a safe distance ahead of the launching aircraft.

There are two general types of fuzes. The nose fuze is designed for installation in the nose of the rocket head. The base fuze is inserted in a cavity in the base of the rocket head.

A base fuze is equipped with delay elements that delay detonation of the fuze, to permit penetration of the target before exploding. The nose fuze can also incorporate such delay elements. As a matter of fact, in recent application of both types of fuzes, the nose, or impact, fuze demonstrated better delay ability than did the competitive base fuze. This is a necessary requirement for an air-to-air rocket, for only if the fuze delays sufficiently to penetrate the target can it inflict its greatest damage.

Some rockets require the use of both a nose and a base fuze, others use just one type of fuze. Practice rockets equipped with spotting charges require a small fuze to detonate the charge. *A rocket designed for a base fuze must never be fired without one.* Failure to insert the base fuze will result in the detonation of the rocket head immediately after launching, and will seriously damage the launching aircraft.

PROPELLENT. The propellent furnishes the power to launch the rocket and increase its forward velocity. The propellent used in some aircraft rockets consists of a nitroglycerin-nitrocellulose mixture, extruded as a long bar, called a *grain*. Others contain a Thiokol-base propellent. The shape of the grain is carefully engineered to insure an even rate of burning. In some types of rockets the grain has a cruciform cross section, in others, the central core is hollow. Plastic strips, called *inhibitors*, are usually placed along the outer grain surface to further regulate the rate of burning.

The temperature of the propellent at ignition has an important effect on the performance of the rocket motor. A higher propellent temperature decreases the burning time, but because of the higher pressure developed during the burning perior, it also increases the projectile velocity. This results in a small gravity drop and a greater impact velocity, but also results in increased dispersion. Excessive internal pressures can rupture the motor tube, and some rockets are equipped with blowout disks to relieve dangerously high pressures. On the other hand, excessively low propellent temperature can cause uneven or intermittent burning of the propellent,

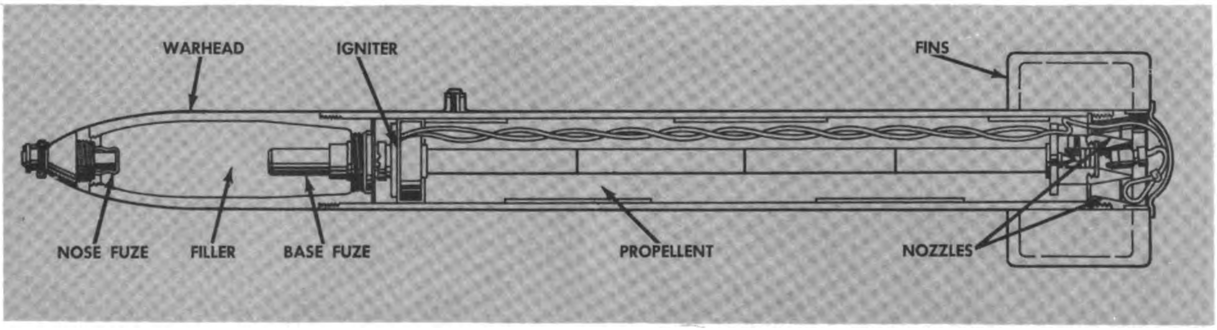

Rocket Components

which results in erratic rocket flight. For these reasons, all rocket motors are designed to be fired within a particular temperature range and should never be fired outside the limits specified on the motor tube.

However, the safe temperature range of most modern rockets is wide enough to include almost any condition met during tactical employment.

Igniter. The igniter, which sets fire to the propellent grain, is located in the motor tube adjacent to the grain. It consists of a small container of black powder, an electric squib, and associated wiring. In response to an electric impulse from the rocket firing switch in the cockpit, the igniter fires and produces a flame that ignites the propellent.

Motor tube. The motor tube contains the propellent, the igniter, and related accessories; provides the combustion chamber for burning the fuel; and supports the fin assembly. The base of the rocket head is threaded, or fixed by some other means, to the front end of the motor tube. The rear of the motor tube is fitted with the nozzle assembly through which the combustion gases are ejected.

When lugs are used to suspend the rocket from the launcher, the lugs are fastened to the outer surface of the motor tube, in line with the long axis of the rocket.

Nozzle assembly. The nozzle assembly, located in the rear of the motor tube, contains the nozzles (1 to 8 in number) that control the escape of the combustion gases. In fin-stabilized rockets, the nozzles are pointed straight back. In spin-stabilized rockets the nozzles are canted at an angle to the rocket axis, and the resulting angular thrust of the exhaust gases imparts a stabilizing spin to the projectile.

Fin assembly. The fin assembly, used only on fin-stabilized rockets, consists of four or more fins symmetrically placed at the rear of the motor tube. The fin and nozzle assemblies may comprise a single unit, but usually the fins are mounted separately.

The fins may be of either the fixed or folding type. A folding fin rocket is launched from a tubular launcher, being loaded into the tube with the fins pivoted inward within the diameter of the rocket. After launching, the fins spring outward and lock in an extended position.

2.25-Inch Aircraft Rocket (SCAR)

The 2.25-inch aircraft rocket is a fin-stabilized rocket used for practice firing at ground targets. The rocket head, which weighs 1.6 pounds, is a hollow steel casing that contains no fuzes or explosive. When the rocket is to be launched from a standard length launcher, a special rail-type adapter, called the SCAR adapter, is required to accommodate the substandard length of the rocket. Two types of adapters have been used. One type is used with the fixed, post-type launcher; the other type shown is required with the flush-mount launcher.

The assembled rocket weighs 12 pounds and is 29 inches long. Its performance, when launched from an aircraft travelling at 304 knots (350 mph) is as follows:

Burning time (70° F.)	0.52 second
Burning distance (relative to ground)	545 feet.
Velocity at burnout (relative to ground	1600 feet per second
Service temperature limits	20° to 110° F.

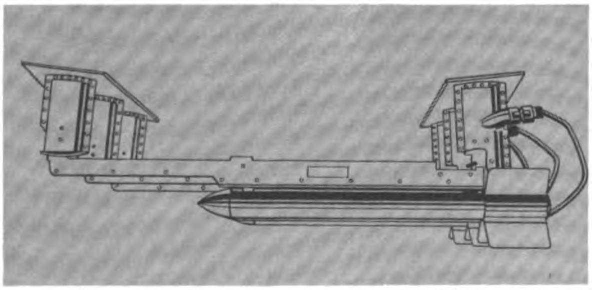

Adapter for Post-Type Launcher 2.25″ Rocket

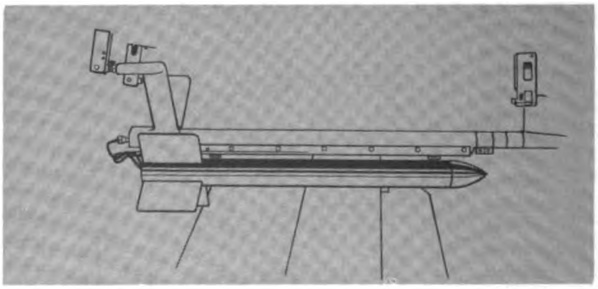

Adapter for Flush-Mount Launcher 2.25″ Rocket

Digitized by Google

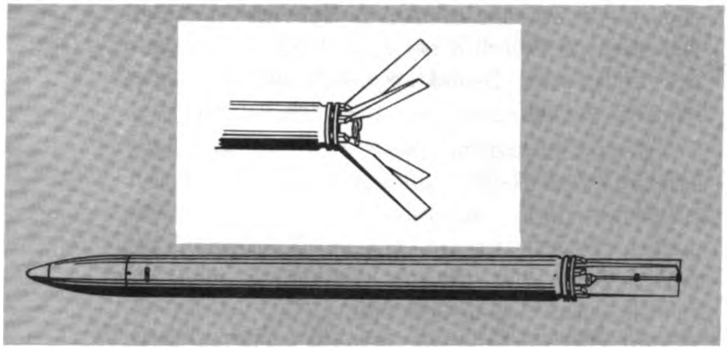

2.75-Inch Folding-Fin Aircraft Rocket (FFAR)

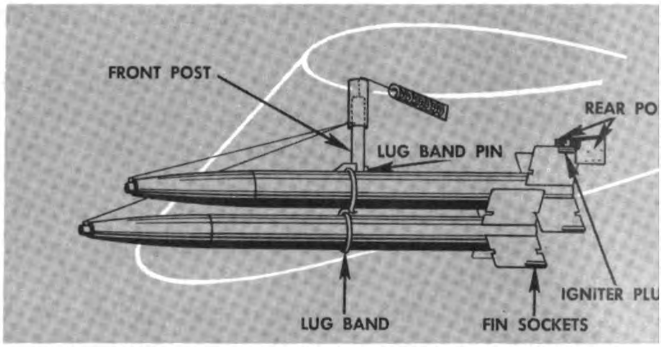

Retractable Post Rocket Launcher

2.75-Inch Folding-Fin Aircraft Rocket (FFAR) Series

The 2.75-inch folding-fin aircraft rocket is intended for either air-to-air or air-to-ground firing from high-speed aircraft. Generally, it can carry a 1.4-pound HE head with a point-detonating fuze. For air-to-ground attack, the rocket may be assembled with a 0.7-pound, shaped-charge (HEAT) head, which is particularly effective against tanks and other types of armored vehicles.

One type of 2.75-inch rocket consists of an explosive head, an aluminum motor tube containing an extruded grain of nitroglycerin-nitrocellulose and electrically activated igniter, and a combined fin and nozzle assembly consisting of four nozzles and four folding fins. The use of lightweight, aluminum motor tube is possible, because the propellent grain is designed to burn at relatively low pressure and temperature.

This type of rocket is loaded in a tube-type launcher, with the four fins folded inward behind the nozzles. After the rocket emerges from the tube, the fins are forced out and locked in an extended position, stabilizing the rocket in flight. This is shown in the illustration below.

Completely assembled, the rocket weighs 18.5 pounds and is 48 inches long. Preliminary performance data for a 440-knot launching speed are as follows:

Burning time (70° F.)	1.8 seconds
Burning distance (70° F.)	1100 yards
Velocity at burnout (70° F.)	2,600 feet per second
Dispersion (air firing):	
Standard deviation:	
At low altitude, 440 knots	3.5 mils
At 35,000 feet 440 knots	4.5 mils
Service temperature limits	20° to 120° F.

Liquid fuel motors are being developed and are expected to increase the velocity of the rocket, widen its range of service temperatures, and increase its storage life.

Retractable Post Rocket Launcher

The retractable post rocket launcher, shown in the next illustration, is the device used with many types of fighter aircraft for carrying and firing externally mounted aircraft rockets. It is designed to replace the earlier, drag-inducing, pylon-type launchers, which impair the performance of high speed fighters.

The launcher consists of a front post and two rear posts that support the rocket, and also the mechanisms and related wiring for launching and jettisoning the rocket. The rocket support posts are normally retracted in the interior of the wing when the launcher is not in use, and automatically retract into the wing as soon as the rocket load is launched or jettisoned.

To load the launcher, the front and rear support posts are first extended and locked. The front end of the rocket is supported by inserting the pin of the lug band, which encircles the motor tube, into the jaws of the front support. The rear of the rocket is supported by engaging the longitudinal sockets of the upper rocket fins with the horizontal igniter plugs that extend from the two rear rocket posts. The igniter plugs serve the dual function of supporting the rear of the rocket and providing the electrical connections for the rocket igniter.

When the rocket is jettisoned, the lug band pin is released and the rocket swings downward, pivoting the igniter plugs. The weight of the rocket causes it to slide off the igniter plugs, whereupon the plugs return to their normal horizontal position as the support posts retract into the wing.

It is possible to mount two rockets on a single launcher by means of tier, or "double shot" mounting. Double-shot mounting is of practical value because a rocket load, mounted in this fashion, creates appreciably less drag than the same mounted on individual launchers. Considerable care must be exercised in connecting the igniters of the upper and lower rockets as prescribed in technical orders; otherwise the upper round may fire out of turn and, with the lower round still attached, pivot sharply downward and damage the launching aircraft.

Tube-Type Launcher

Tube-type launchers are used to launch the 2.75-inch folding fin rocket from fighter aircraft. The tubes used are about 4 feet in length and often are mounted beneath the aircraft wing in clusters. Other mounting arrangements can be used, as dictated by installation or tactical requirements.

All types of these launchers tested so far are mounted on the retractable-post rocket launcher and consist of streamlined clusters of tubes. They are expendable and can be jettisoned. Tube-type launchers may also be suspended from pylons, thus increasing an aircraft's aramament for short missions where external fuel tanks are not needed. The Multitek MA-2 launcher was designed for mounting on 5-inch HVAR posts and consists of two tubes.

Armament Control Panels

The standard rocket control panel for fighter bombers such as the F-84 is designated as the A-3 control panel. It is located in the cockpit and consists of a rotary selector switch, an arming switch, and an intervalometer with rotary reset switch.

When the rotary selector switch is set to SINGLE, only one rocket is fired each time the rocket release button is depressed. When the selector switch is set to AUTO, the rockets fire in an established sequence with approximately 0.1-second delay between rockets.

The rocket arming switch has two positions: DELAY and INST. Since present-day rockets no longer have both base and nose fuzes, the switch is left in the INST position. This permits the nose fuze to be armed, and the rocket detonates upon impact.

The intervalometer consists of a conventional counter-indicator with a rotary reset switch. The counter-indicator informs the pilot of the position and wing location of the next rocket to be fired, and enables him to keep check on the location of rockets remaining on the launcher.

Information on the rocket control panels of all-weather interceptors is not given in this publication because of the nonuniformity of the various control panels. For detailed information and operating instructions, see the flight handbook of the aircraft involved.

Handling and Loading Precautions

Aircraft rockets, like other high explosives, must be handled and stored carefully. Standard magazine storage regulations should be observed. Fuzed heads should be stored in high-explosive magazines and handled as high explosives.

Motors without heads may be stored in smokeless powder magazines. Motors with heads attached are stored in accordance with regulations governing the storage of fixed case ammunition.

All rockets have the firing temperature limits stencilled on the side. These are the temperature limits for which the propellent was designed and should not be exceeded. During hot summer months, a tarpaulin should be used to keep the rockets shaded when stored prior to being fired. Rockets fired at excessively high temperatures result in an accelerated combustion process, producing higher than normal pressures within the rocket motor. These high pressures can result in a rocket motor explosion and damage to the firing aircraft. Excessively low temperatures will cause the propellent grain to contract and possibly crack. The increase in

Digitized by Google

the burning surface caused by the crack will increase the pressure in the motor. This can also result in motor failure.

Use caution in handling rockets. If a rocket or case or rockets is dropped while being handled, it should be tagged and returned to the ammunition area for inspection, as such a jar can break or crack the propellent grain. The rocket grounding arrangement (fin cover, nozzle cap, etc.) should be left in position on the round during handling. It should only be removed immediately before the round is loaded into the launching tube.

For both pilots and crew members, the loading and arming procedure is one of the most important phases of rocket firing. In loading and arming rockets the following procedure should be adhered to.

1. Park the aircraft in a clear area.
2. Have qualified safety personnel present to observe loading operation.
3. Visually check launchers for dents, broken detents, and corroded firing contacts.
4. Check all firing circuits for continuity and residual voltage.
5. Make sure all sources of power are OFF, all firing circuit switches are OFF, and aircraft frame is grounded.
6. Assemble rockets and check rocket continuity.
7. Load rockets into launching tubes and make certain each round is properly positioned (check loading instructions for specific rocket used.)
8. Check for good contact between launcher firing contact and rocket.
9. The ammunition truck and the loaders leave the area after the rockets have been loaded.

BOMBS

Definition

A bomb is a particular kind of ammunition which is designed to be dropped from an aircraft in flight to inflict damage on the enemy. It usually consists of a metal container filled with explosives or chemicals, a device for stabilizing its flight so that it can be aimed accurately, a mechanism for exploding the bomb at the target, and such safety devices as may be necessary to make it reasonably safe to carry. The metal container, called the bomb body, is usually streamlined with a rounded (ogival) nose and a tapered tail. The stabilizing device is attached to the tail end of the body and generally consists of a sheet metal fin assembly, although a parachute or cloth streamers may be used. The mechanism for exploding the charge is called a fuze and is generally placed in the nose or in the tail end of the body. Two or more fuzes are occasionally used in the same bomb for different effects, for flexibility in use, or to insure reliability of functioning — that is, should one fuze malfunction, the other will cause the bomb to explode. The safety devices are usually built into the fuze and are held in place during storage and shipment by seal wires or cotter pins. When the bomb is prepared for use, the seal wire and cotter pins are replaced

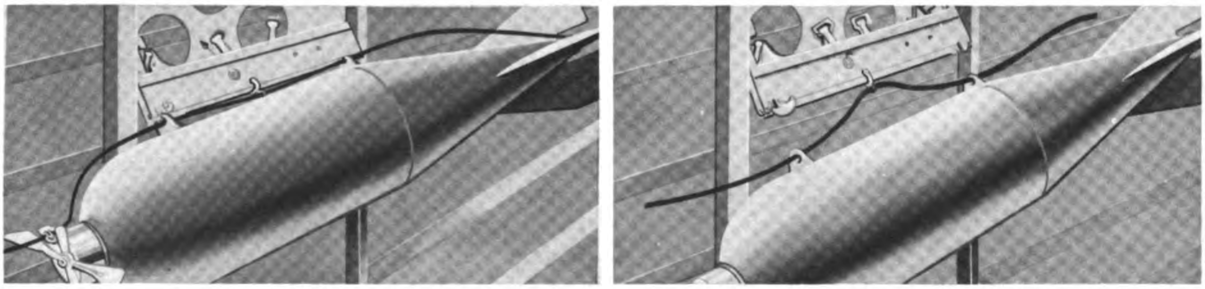

Bomb hanging from its shackle in the bomb-bay. Fuzes in nose and tail are "safe" until their vanes are spun by the air as the bomb falls. Here, they cannot spin because of the arming wire which is gripped at its mid-point by an arming lever in the shackle.

Now the bomb has been released "armed". The arming lever holds onto the arming wire. The falling bomb pulls away from the arming wire permitting the vanes to spin, thus arming the fuses.

Arming Wire on Bomb

Digitized by Google

by an arming wire which is not removed until the bomb is dropped. The preceding illustration shows the arming wire on a bomb.

NOTE: Complete details on aircraft bombs and fuzes are contained in TO 39B-15-1.

Release and Arming

As explained above, the bomb is carried in a rack in the aircraft's bomb bay by means of a shackle. Hooks on the shackle engage suspension lugs attached to the bomb body. The loop of an arming wire is attached to the arming lever at the center of the shackle. The free ends of the arming wire are passed through safety devices in the fuze thus maintaining the fuze in a safe (unarmed) condition. Fahnestock clips are placed over the protruding ends of the arming wire to prevent the wire from slipping out of the safety devices by accidental means (such as slip stream forces) prior to bomb release. If a bomb must be released over friendly territory, the arming wire is released with the bomb, stays in place as the bomb falls, and thus prevents the fuze from arming so that the bomb does not explode when it strikes. When the bomb is released for effect, the arming wire is retained by the arming lever, and as the bomb drops, the wire is pulled from the fuze in the manner shown in the second illustration on the previous page.

The fuze is then free to become armed, that is, to be in condition to operate.

The three types of arming wire assemblies are shown in the illustration on this page. Each assembly consists of a length of brass wire attached to a swivel loop. Fahnestock safety clips are also supplied (two for each end of wire) to prevent the wire from slipping out of the fuze.

Some fuzes arm by spring action, others by clockwork, powder train, or electrical means, but most fuzes now in use are armed by the action of arming vane, similar to a propeller, which is driven by the air stream as the bomb falls. The arming vane may drive a gear train which, after a definite interval, removes safety blocks or alines the detonator with the next element in the explosive train, usually the booster lead-in.

When the bomb reaches the target, the firing pin is driven into the detonator which

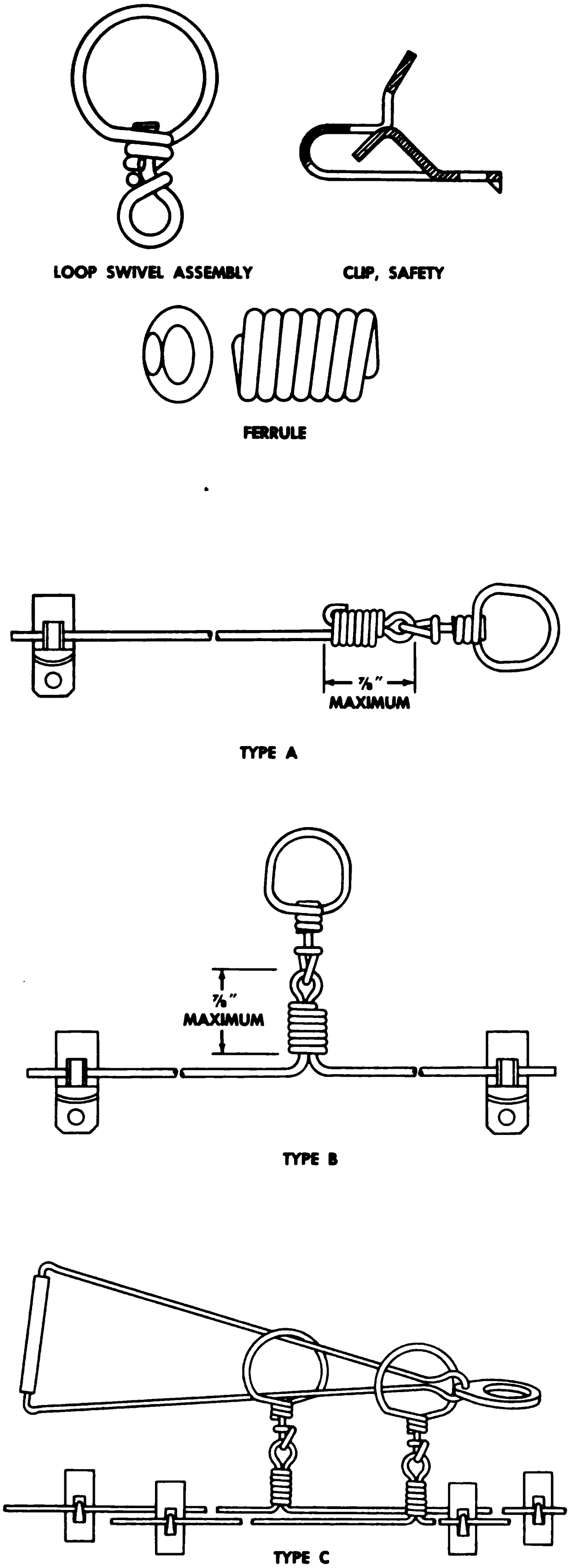

Arming Wire Components and Assemblies

contains a pellet of sensitive explosive about the size of an aspirin tablet. The blast from the detonator detonates a booster of less sensitive explosive — about the size of a flashlight battery — which relays and amplifies the blast in order to detonate the bursting charge of the bomb. Some fuzes have delay elements between the firing pin and detonator to delay the detonation of the bomb until it has had time to penetrate the target.

Explosive Train

The type of explosive used in such large quantities as in the loading of bombs must be relatively insensitive to shock and heat. This is necessary for a number of reasons. A relatively insensitive explosive provides a reasonable degree of safety in storing, shipping, and handling. It allows the bomb to be dropped safe over friendly territory. And, it permits the bomb to be used to penetrate a resistant target, such as armor plate, thick earth, or concrete, before detonating. If a bomb were to detonate on impact outside such materials, the damage would be relatively slight.

On the other hand, the type of explosive used in the fuze must be very sensitive, so that it will be sure to detonate on impact of a firing pin. Such explosives are not safe to handle except in minute quantities which are strongly compressed in a metal capsule. These capsules — called detonators — are built into fuzes. However, the shock from the explosion of a detonator is not sufficiently strong to be reliable as a means of detonating the large amount of insensitive explosive which makes up the main charge of the bomb. So a quantity of an explosive which is more sensitive than the main charge is placed next to the detonator. This element is called the booster. The booster is small and sensitive enough to be detonated by the detonator, yet large enough so that the shock of its explosion will detonate the bursting charge of the bomb. Such an arrangement of elements is called the explosive train. This is the basic method of operation of all explosive ammunition. The illustration on the preceding page shows the explosive train in a bomb fuze.

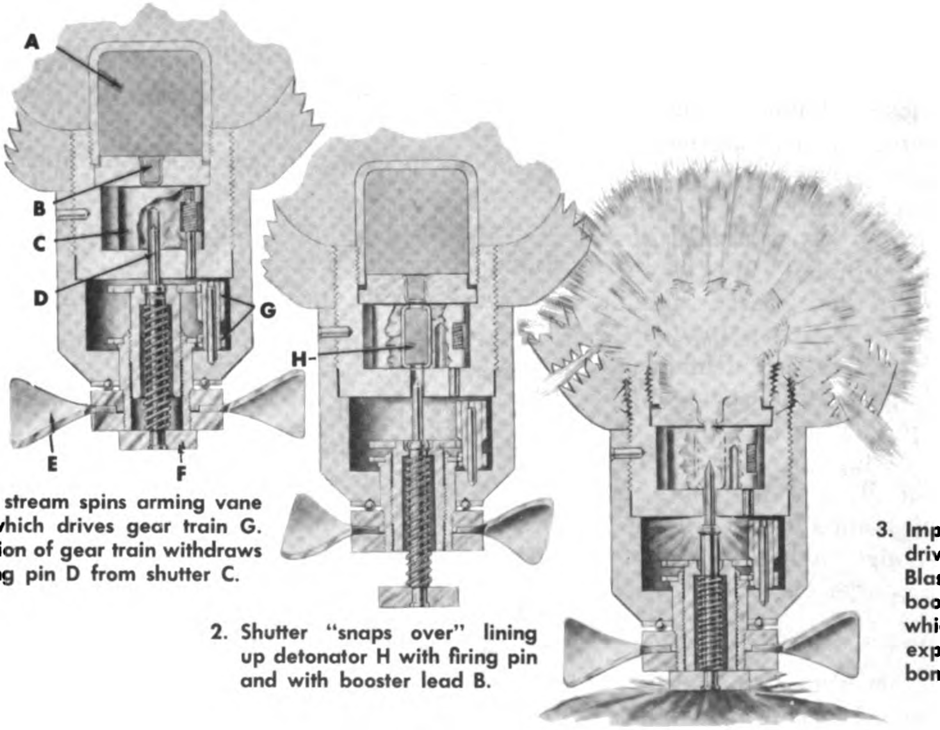

Air stream spins arming vane E which drives gear train G. Action of gear train withdraws firing pin D from shutter C.

2. Shutter "snaps over" lining up detonator H with firing pin and with booster lead B.

3. Impact of striker F on target drives firing pin into detonator. Blast of detonator explodes booster lead B and booster A which amplifies the blast and explodes main charge of bomb.

Explosive Train

Digitized by Google

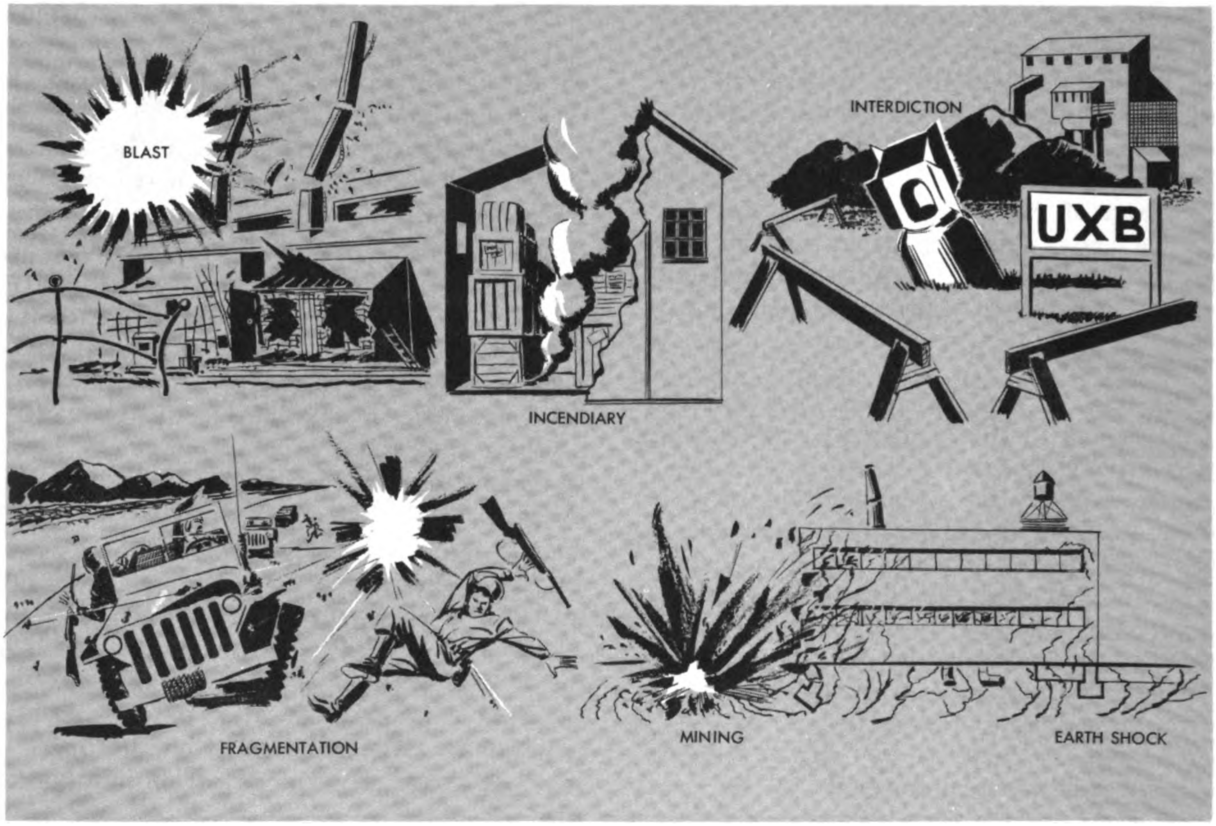

Effects of Bomb Burst

Effects of Bomb Burst

When a high explosive bomb is detonated, the charge is transformed in an instant (about 0.0002 sec.) into a very hot gas. This gas momentarily occupies only the volume of the solid explosive and consequently develops enormous pressure (about 100 tons per square inch for TNT). The gases expand violently in all directions, under influence of this pressure, shattering or displacing surrounding material, generating shock and pressure waves, and projecting fragments of the shattered case at high velocity. The effects are shown in the illustration above. In the case of chemical bombs, the explosive charge is only large enough to open the bomb body and scatter the charge over the target.

Classification of Bombs

In common with other types of ammunition, bombs are classified according to use as armor-piercing (AP), general-purpose (GP), light-case (LC), fragmentation, depth, semi-armor-piercing (SAP), gas, smoke, incendiary, photoflash, target identification (TI), practice, and drill. Except for practice bombs, they are further classified according to filler as follows:

EXPLOSIVE — AP, GP, LC, fragmentation, depth, and SAP.

CHEMICAL — Gas, smoke, and incendiary.

NAPALM — Incendiary.

PYROTECHNIC — Photoflash.

INERT — Drill.

Practice bombs are usually inert-loaded except for a spotting charge of black powder or smoke mixture — a sonic device may also be used for spotting. The percentage of explosive is often used as a description of the type of bomb; for example, a semi-armor-piercing bomb, which contains approximately 30 percent of explosive by weight, may be described as a "30-percent bomb;" similarly, a general-purpose bomb may be described as a "50-percent bomb."

Digitized by Google

1000-lb. GP Bomb, AN-M65A1

General-Purpose (GP)

This type of bomb is designed to meet the requirements of the great majority of bombing situations. The various models range in weight from the 100 to 44,000 lb. The bombs have from 42-50 percent explosive weight. They are used for blast, mining, and fragmentation effects. They are designed to use both a nose and a tail fuze, except the 12,000-, 22,000-, and 44,000-lb. bombs which use special tail fuzes only. The two fuzes are used either to allow selective fuzing or to insure detonation.

As can be seen from the illustration above, the general-purpose bomb is cylindrical in shape with an ogival nose and a coned base. Suspension lugs are provided on the 100- to 2,000-lb. bombs. Special suspension is required for the larger bombs, for which special bomb racks are designed. General-purpose bombs are normally loaded with tritonal. TNT, composition B, or amatol 50-50 have been used in the past. GP bombs with these fillers are still available for use.

Light-Case (LC)

This type of bomb is designed to carry a maximum charge. The percentage of explosive is 70 percent or more. Since strength of case has been sacrificed to obtain maximum charge, this type of bomb cannot be used for penetration and must be fuzed to explode before the case breaks up on impact. In other respects this type resembles the general-purpose type described above.

Armor-Piercing (AP)

This type of bomb is designed to pierce the heavy deck armor of modern battleships. The case is extremely heavy, and, as a consequence, the percentage of explosive is about 15 percent. The weight and thickness of the metal case are concentrated toward the nose. The bomb body is solid steel, which is machined to a sharp point at the nose as illustrated below. A special tail fuze is used. The explosive filler is explosive D, which is considered the least sensitive explosive.

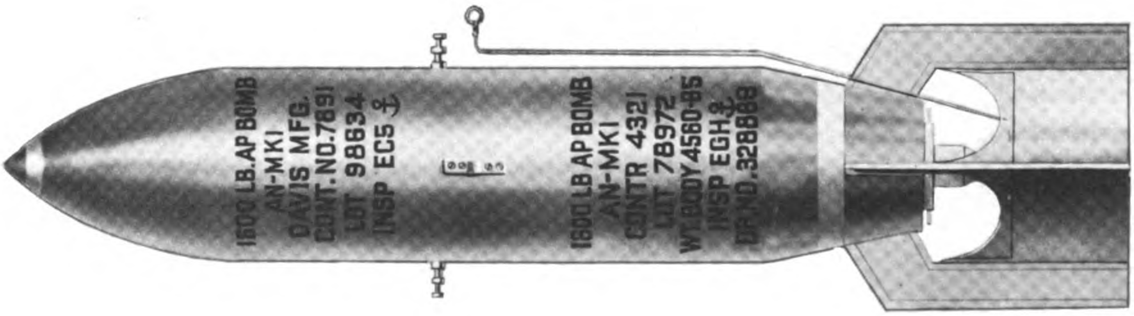

1600-lb. AP Bomb, AN-Mk 1

Digitized by Google

500-lb. SAP Bomb, AN-M58A1

Semi-Armor-Piercing (SAP)

This type resembles general-purpose bombs except that the body of the SAP bomb is heavier and the explosive charge is approximately 30 percent. SAP bombs are loaded with picratol, and, generally, are only tail-fuzed.

An SAP bomb is pictured above.

Depth

The depth bomb is a light-case type of bomb designed for use against submarines. It averages 70 percent explosive and is loaded with HBX, HBX-1, or TNT. The depth bomb shown on this page has a cylindrical case and a flat nose which reduces or prevents ricochet when dropped from aircraft flying at low altitudes. The depth bomb is fuzed with a hydrostatic fuze which functions at a predetermined depth rather than on impact. Depth bombs are usually tail-fuzed, but provision is also made for nose fuze which may be used under certain tactical conditions.

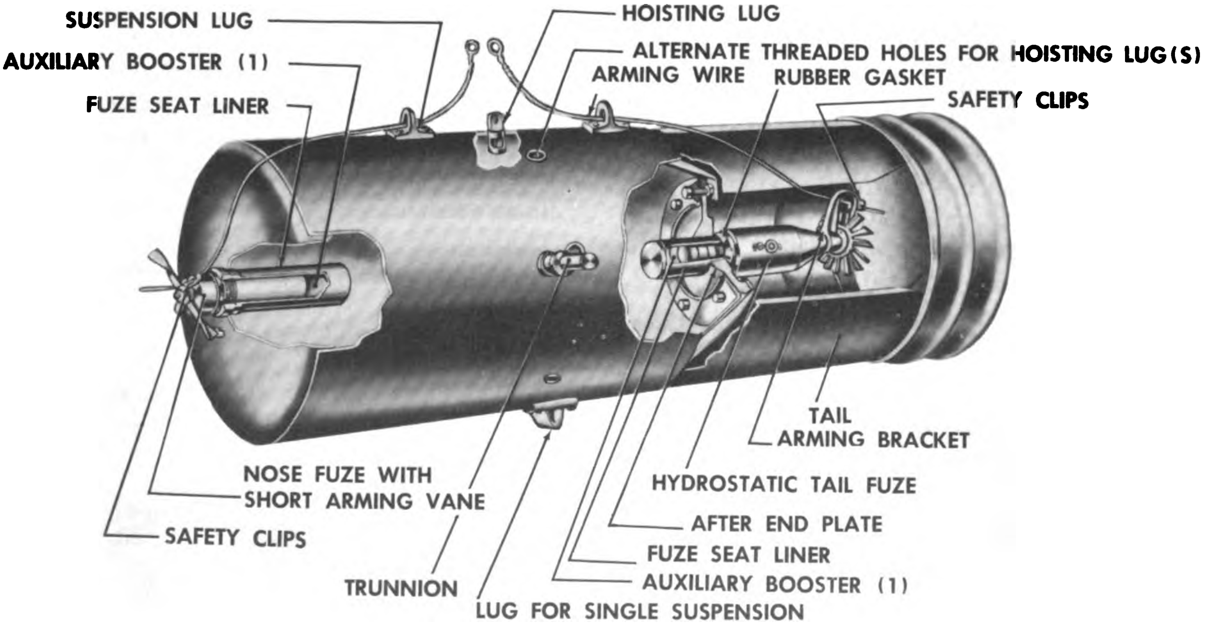

350-lb. Depth Bomb, AN-Mk 54 Mod. 1

Digitized by Google

23-lb. Fragmentation Bomb, N40A1 (with parachute unit)

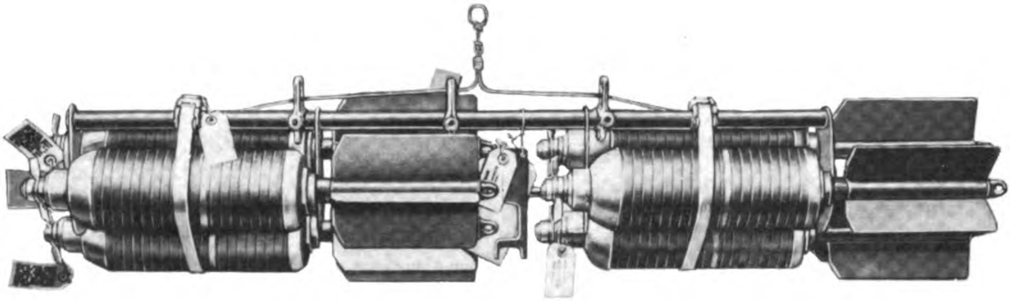

Fragmentation Bomb Cluster, AN-M12A2

Fragmentation

Fragmentation bombs are designed to produce their effect through projection of the fragments of the body. They are intended for use against personnel, light materiel, and grounded aircraft. The explosive charge of this type averages 14 percent. The body walls are of uniform thickness and may be made up of steel coils. One type of fragmentation bomb is stabilized by fins. The other, shown on this page, designed for low altitude bombing, is equipped with a parachute to delay the impact of the bomb until the aircraft has cleared the danger area. For concentrated attacks, fragmentation bombs are dropped in clusters. Fuzes for fragmentation bombs are designed to function on or above the surface of the ground. Fragmentation bombs are usually loaded with composition B or TNT.

Chemical Bombs

Chemical bombs are a specific kind of munitions designed to be dropped from aircraft. By chemical action, they may produce screening smokes, incendiary action, or toxic effects. A chemical bomb consists of a metal container (the bomb body) with incendiary, gas, and/or smoke filling; tail fins to stabilize flight; a fuze (or fuzes) for ignition or detonation; and other components required to make it function.

SMOKE AND GAS BOMBS. Smoke and gas bombs normally have cylindrical steel bodies with rounded or ogival noses and tapered rear sections. The body serves as the filling container and as the support for the components. An example of a smoke bomb is shown in the illustration below.

Types of fillings include:

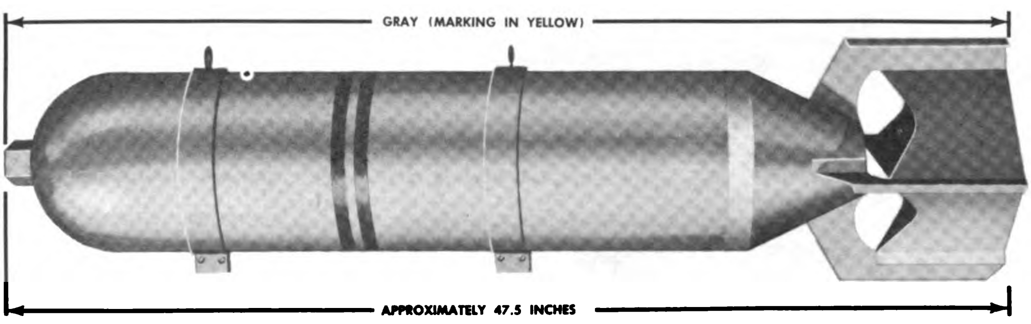

100-lb. Phosphorus (WP) Smoke Bomb

Digitized by Google

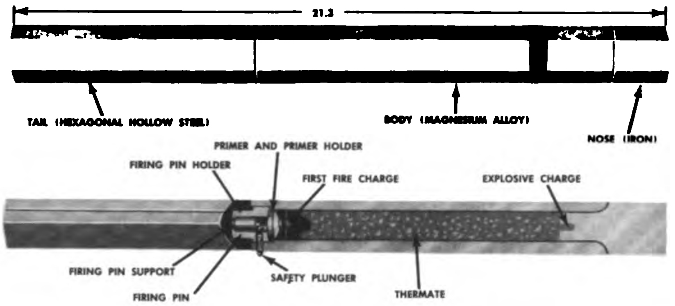

4-lb. Incendiary Bomb, AN-M50A2

Persistent gas fillings — H (mustard, HD (distilled mustard).

Nonpersistent gas fillings — AC (hydrocyanic acid), CG (phosgene), CK (cyanogen chloride), (G agent).

Smoke fillings — PWP (plasticized white phosphorus), WP (white phosphorus).

A nonpersistent gas is one that is normally effective in the field at its dispersion point for 10 minutes or less. A persistent gas is one that is normally effective in the field at the point of dispersion for more than 10 minutes.

Incendiary bombs. Incendiary bombs are small, light bombs constructed to set fire to buildings, crops, food, ammunition, or other materials of military importance. Incendiaries are classified as either intense or scatter types. The intense type remains intact until consumed, while the scatter type dispenses small fragments of burning material over a wide area. Typical incendiary fillings include IM (isobutyl methacrylate), NP (napalm-incendiary oil), PTI (incendiary mixtures), and TH (thermate).

Thermate Incendiary Bombs. There are two types of thermate bombs. The AN-M50A2 and the AN-M50XA3 are discussed here. Both are 4-lb. bombs. The AN-M50A2 is an intense type of incendiary bomb, while the AN-M50XA3 is the scatter type. These bombs are completely assembled in manufacture and packed in clusters. As each bomb is released from the cluster, the safety plunger springs outward, arming the bomb.

The AN-M50A2 is shown in the illustration above. It has a hexagonal magnesium alloy body, an iron nose plug, and a sheet metal tail. The bomb is 21.3 inches in overall length 1.69 inches across the flats, and weighs 3.7 pounds. The main charge consists of 1.25 pounds of magnesium alloy (the bomb body) and 0.63 pound of thermate. Upon impact, the firing pin is thrown forward, striking the primer. The primer flash ignites the first charge. The bomb body vent holes release ignition gases, thereby preventing an undesired explosion. The first fire charge ignites thermate filling. The thermate burns at approximately 4300° F. for about 1½ minutes before igniting the magnesium alloy body, which burns from 4 to 6 minutes longer.

The AN-M50XA3, shown below, is similar to the AN-M50A2, except that the nose plug is replaced by a steel shell containing a delay fuze, a detonator, and a tetryl bursting charge.

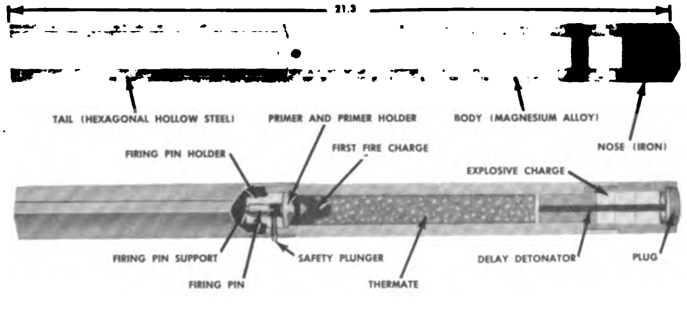

4-lb. Incendiary Bomb, AN-M50XA3

Digitized by Google

This bomb burns for about 1½ minutes at which time the delay fuze is ignited. The burning fuze provides a delay ranging from a few seconds to several minutes, and ignites the detonator which explodes the charge and projects fragments of the steel shell and particles of burning magnesium.

Oil Incendiary Bombs. Another type of incendiary bomb is shown in the illustration on this page. This scatter-type bomb, the AN-M69, contains a main charge of 2.8 pounds of gelled gasoline and an ejection-igniter charge of 0.4 ounce of black powder and magnesium. The total weight of this bomb is 6 pounds.

AN-M69 bombs are issued in 100- or 500-lb. clusters (AN-M12 or AN-M13). The bomb may also be assembled in an aimable cluster.

The bomb is stabilized in flight by streamers of muslin which, until release of the bomb from the cluster, are packed loosely in the tail cup. It is fuzed with the M1 fuze which acts upon impact with 3 to 5 seconds delay. The fragments of the charge burn from 8 to 20 minutes, dependent upon their size.

The sheet-steel bomb case is hexagonal, 19.5 inches in length and 2.88 inches across the flats. It is closed at the nose by a sheet steel nose cup and at the tail by a sheet steel tail cup. The charge of gelled gasoline is contained in a cheesecloth sock. The nose cup contains the fuze, the ejection charge, and a diaphragm. Upon functioning of the explosive train, the gel is ignited and ejected out of the tail of the bomb. The tail cup serves as attachment and container for the streamers.

Napalm Bombs

Napalm bombs could probably be more accurately classified as incendiary bombs; however, recent results have proved them to be effective antipersonnel weapons as well. Because of their effectiveness, ease of manufacturing, and low cost, they have become highly important weapons.

As an antipersonnel weapon, a napalm bomb is very effective against dugouts, foxholes, or slit trenches. As an incendiary weapon it is likewise effective against wooden houses, bridges, and surface vessels; also against ammo dumps, fuel dumps, and truck convoys. In some instances it may be used for burning out vegetation and destroying crops.

The coverage of the napalm bomb is dependent upon the altitude and speed from which the drop is made. Above level terrain, dropped at an altitude of 100 feet and a speed of 300 knots, the coverage will be approximately 100 feet wide and 300 feet long. Best coverage is obtained if dropped at lower altitudes and faster speeds. For maximum effectiveness the "fire bombs" should be released in mass; 12 or more tanks against a single target area. If not made simultaneously, releases should be made with very short intervals of time between impacts.

A napalm bomb is made up of three basic component parts: the tank, the incendiary filler, and the igniter system.

TANKS. Various types of jettisonable fuel tanks are used. The universal or interchangeable tank has a capacity of 150 gallons and is shipped with stabilizers in a knocked down

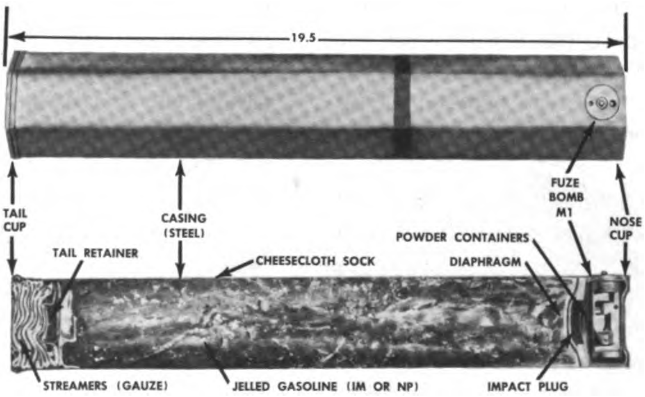

6-lb. Oil Incendiary Bomb, AN-M69

Digitized by Google

condition to be assembled in the field.

Many of the tanks used in the Korean Action were of Japanese manufacture. These tanks have a capacity of 110 gallons and are generally of a lighter construction than the US external fuel tanks. With the use of stabilizers, the tanks have more stability and can be dropped more accurately. However, since the majority of napalm runs are made at low altitudes, satisfactory accuracy is obtainable without the use of stabilizers.

FILLER. Early in World War II, the filler was fuel oil with rubber as a thickening agent. Then it was found that a better gelling (thickening) agent could be made from a mixture of aluminum napthenate and aluminum soaps of coconut fatty acids. Hence came the name "napalm," "nap," from naphthenic acids and "palm," from coconut acids. The thickener is a white granular powder consisting of 64% aleic acid, 30% coconut fatty acid, and 5% naphthenic acid. The preferred mixture of gasoline (70-90 octane) to thickener is 94 ± ½% gasoline to 6 ± ½% thickener. A thinner mixture results in a fireball with minimum burning. A heavier mixture results in less coverage and in slow burning of low intensity.

Other mixtures that can be used are as follow:

a. 1 to 1 mixture of gasoline and diesel oil gelled with 6% napalm thickener.

b. 25% gasoline and 75% diesel oil with no thickener. This gives a large flash or fireball with little or no after burning.

c. 1 to 1 mixture of fuel oil and gasoline. This gives a flash with some afterburning.

The thickener has a tendency to absorb moisture when exposed to the atmosphere for a period of time. Excessive moisture will seriously affect the gelling process. The thickener should, therefore, be kept dry in storage.

Temperature, also, affects the rate of gelling and gasoline will not gel with napalm in temperatures of 60° F, or less. In cold weather operations xylenol can be used to get a gel of correct viscosity. Xylenol decreases the viscosity of the gel, but this is offset by increasing the thickener to 7% instead of the usual 6%. Many methods of raising the temperature of the gasoline in cold weather operations have been tried experimentally, to make the use of xylenol unnecessary. One method that has proved satisfactory is the placing of a steam coil in the gasoline filter, thus heating the gasoline as it flows through the line.

IGNITER. There are four types of igniters: M13, M14, M15, and M16. The hand grenade, M15, with special mechanical fuzes and accessories attached is the igniter that is used in most cases.

Igniters are made up of either white phosphorous (WP) or sodium (NA). White phosphorous reacts when coming in contact with air and is therefore used against land targets. Sodium reacts when coming in contact with water and is used against water targets.

The M13 and M15 igniters are attached to the outside of the tank by means of a clamp provided near the rear of the tank. The M15 and M16 igniters have adapters that incorporate a filler cap assembly which enables them to be installed in the opening provided for filling the tank.

The two types of fuzes, M154 and M157, used on napalm bombs are of the inertia type that function on any angle of impact.

MIXING. The napalm and gasoline are mixed by means of an incendiary mixer, Mk. 1, Mod. 1. This provides for the correct mixing of the napalm and gasoline during delivery to the tank in one continuous operation. The napalm thickener is fed into the gasoline supply through a hopper, and the amount is controlled according to the pressure of the incoming supply of gasoline. For a given gasoline temperature and a given inlet pressure on the fuel line, more napalm may be drawn into the mixer by increasing the size of the discharge nozzle at the tank. There is an adjustable calibrated nozzle which is numbered from 1, the smallest opening, through 6, the largest opening. The approximate correct setting of the nozzle for an intake of 6% USAF napalm thickener, type 1, is usually 4. Settings below 3½ are quite sensitive. Settings below 1½ eliminate suction and may cause gasoline to rise in the hopper. The napalm nozzle should be turned on after the gasoline starts flowing and turned off

Digitized by Google

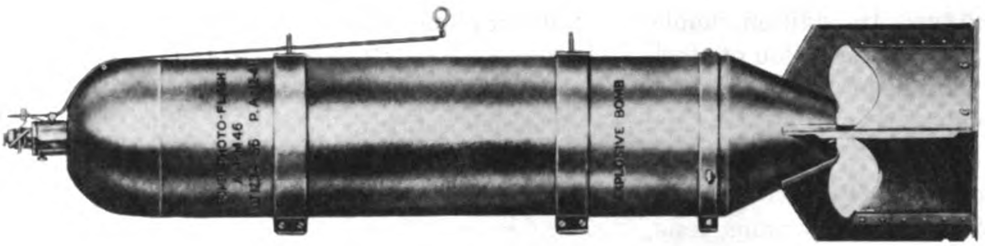

100-lb. Photoflash Bomb, AN-MA6

before the gasoline stops flowing. This procedure keeps the hopper and the suction chamber dry and avoids back splash.

Napalm should always be stored in a cool, dry location.

Photoflash

This type is a pyrotechnic item but is classified with bombs because of its explosive effect. It is a light case bomb with a charge of flashlight powder instead of high explosive. The powder is extremely explosive — therefore, a photoflash bomb must be handled carefully at all times. The bomb is fuzed with a mechanical time nose fuze, which functions at a desired altitude between the aircraft and the target area to be photographed.

A photoflash bomb is illustrated above.

Practice

Practice bombs are used for target practice. They are available in various sizes and weights to simulate service bombs.

The 100-lb. practice bomb, M38A2, shown below, simulates GP bombs. It is filled with sand and has a 3-lb. spotting charge.

Drill

Completely inert bombs and components are supplied for the training and practice of ground crews. Each type and weight of service bomb is represented by a corresponding drill bomb. Drill bombs are made up from the metal parts of service bombs, inert-loaded when necessary. They are used for practice fuzing, unfuzing, and handling. Drill bombs, unlike inert practice bombs, are not expendable; they are not used for bombing practice.

Identification

Bombs and bomb components are completely identified by standard nomenclature and the ammunition lot number which are stenciled or stamped on all packings and, where size permits, on the item itself. In addition, fuzes may be identified by visual inspection by noting the differences in design shown in illustration under FUZES.

Painting and Marking

PAINTING.

Bombs. Bombs are painted to prevent rust and to furnish, by color, a ready means

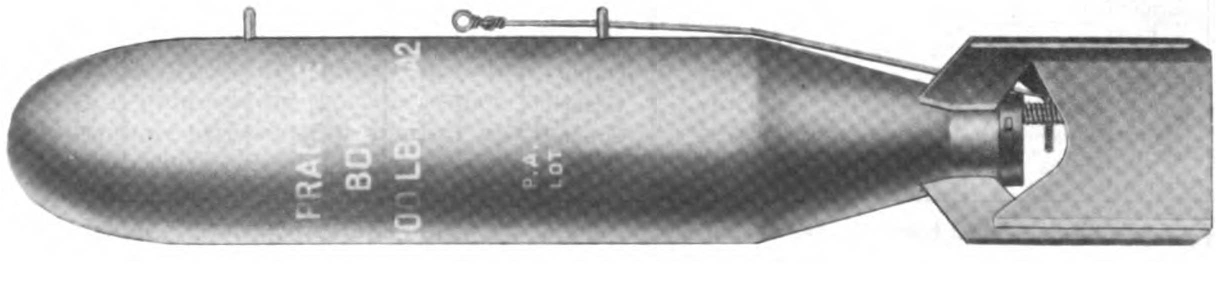

100-lb. Practice Bomb, M38A2

Digitized by Google

of identification as to type. In addition, bombs are painted to prevent easy detection of stock piles from the air. The color scheme, except for Navy-type bombs, is outlined in the table below.

Fuzes. Some fuzes are painted to indicate differences in length of delay or arming time, or to indicate position as nose or tail.

Primer-detonators. Primer-detonators are painted to indicate length of delay

Packing. Packings or packing components such as shipping bands and fin crates are painted olive-drab.

Marking. Bombs are marked with the following information:

Type — as GP, AP, SAP.
Weight.
Model.
Filler — as TRITONAL, TNT, EXP D.
Ammunition lot number.
AIC symbol.
ICC shipping designation.
Inspector's stamp.
The letters "US".
Displacement.
Address.
Shipping ticket number.

(The last two items listed may be omitted when bombs are shipped in full carload lots.)

INDENTIFICATION BANDS

Type of bomb	Color of body	Color	Number of bands and location			Color of Marking
			Nose	Center	Tail	
GP and LC (TNT or Amatol loaded), FRAGMENTATION, (TNT or Ednatol, loaded), AP, DEPTH, and SAP	Olive-drab	Yellow	1*	None	1*	Black
GP and FRAGMENTATION (COMP B loaded)	Olive-drab	Yellow	2	None	2	Black
GP and LC (Tritonal loaded)	Olive-drab	Yellow	1 narrow between 2 wide bands.	None	1 narrow between 2 wide bands.	Black
PHOTOFLASH	Gray		None	None	None	Black
PRACTICE	Blue		None	None	None	White
DRILL	Olive-drab	Black	1	None	1	Black
CHEMICAL:						
Smoke	Gray	Yellow	1	1	1	Yellow
Incendiary	Gray	Purple	1	1	1	Purple
Persistent gas	Gray	Green	2	2	2	Green
Nonpersistent gas	Gray	Green	1	1	1	Green
Irritant gas	Gray	Red	1	1	1	Red

*Small fragmentation bombs (under 90 lb.) are painted on the head and base instead of with an actual color band.

Color Scheme for Bombs

Digitized by Google

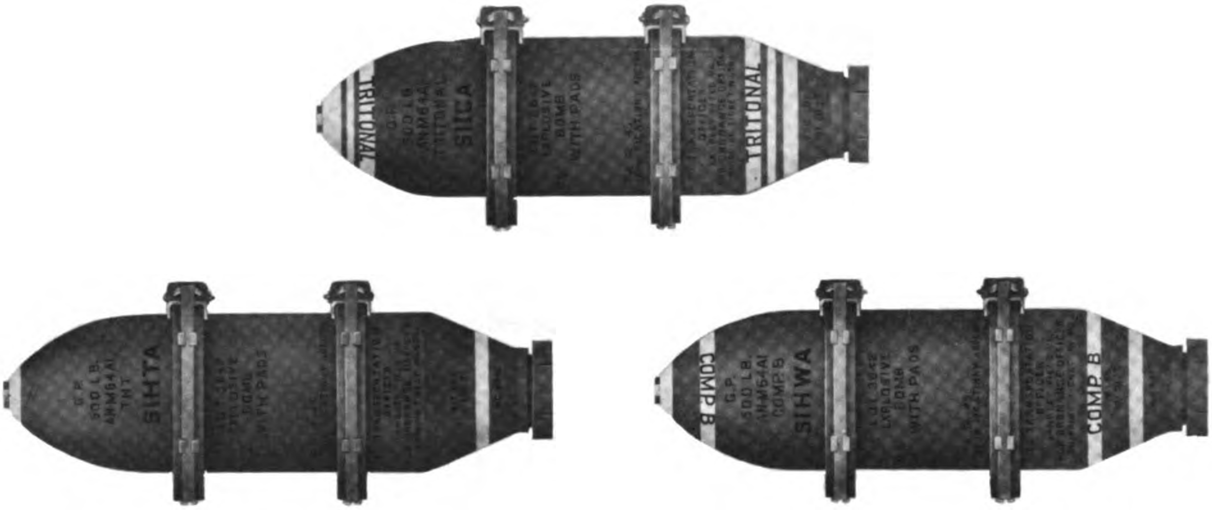

GP Bombs with Typical Markings

Fuzes are marked either by stenciling or stamping the type, model, lot number, and length of delay on the fuze body.

Primer-detonators are marked to indicate the type, model, and length of delay.

Explosives Used in Bombs and Fuzes

An explosive is any substance which is capable of decomposing rapidly, yielding gases and heat. Explosives must be "set off" or ignited in order to produce their violent bursting effect.

A high explosive is one which is said to detonate, that is, it decomposes rapidly. A low explosive, on the other hand, burns at a low rate. The blasting and shattering effect of a high explosive far exceeds that of a low explosive.

High explosives produce a detonating wave which can set off other high explosives. This method is commonly used to set off or ignite various types of high explosives. The detonating wave is produced by a primer, which is a highly sensitive explosive but not very powerful. The wave action is built up by one or more additional explosive charges of increasing power and decreasing sensitivity. The result is a strong detonating wave which sets off the powerful but relatively insensitive bursting charge.

The following explosives are used in bombs. All of them are high explosives, except for black powder, which is a low explosive.

Black Powder. This powder is used as a spotting charge in practice bombs.

TNT. Trinitrotoluene, commonly known as TNT, is one of the most stable of high explosives. It is relatively insensitive to blows or friction. Confined TNT, when detonated, explodes with violence. It is readily detonated by lead azide, mercury fulminate, and tetryl.

Amatol. This is a mixture of ammonium nitrate and TNT. It has approximately the same general characteristics as TNT. Either a 50:50 or 80:20 mixture is used in bombs. The first figure in each ratio represents the percentage of ammonium nitrate in the mixture.

Ednatol. Ednatol is a mixture of haleite and TNT. It is less sensitive than tetryl but more sensitive than TNT.

Composition B. This is a mixture of RDX, TNT, and beeswax or similar wax. It is less sensitive than tetryl but more sensitive than TNT.

Tritonal. Tritonal is the name given to explosives containing TNT and aluminum, generally in the ratio of 80:20. Tritonal pro-

Digitized by Google

duces a greater blast effect than either TNT or composition B.

Explosive D. Of all the military explosives, this is the least sensitive to shock and friction. It is, therefore, used as a bursting charge in AP bombs, which must pass through armor without exploding. Explosive D is also known as ammonium picrate.

Picratol. Picratol is a mixture containing 52 percent explosive D and 48 percent TNT. It has the same resistance to shock as that of explosive D. Picratol is used in SAP bombs.

Tetryl. Tetryl is more easily detonated than either TNT or explosive D. It is sufficiently insensitive when compressed to be used as a booster explosive. Tetryl is also used as a burster in chemical shells and bombs.

Lead Azide. This is an initiating compound used to detonate light explosives. It is sensitive to flame and impact. Lead azide is used in detonator assemblies in fuzes.

Mercury Fulminate. This is an initiating compound which is extremely sensitive to heat, friction, spark, flame, or shock. For all practicable purposes, this compound has been replaced by lead azide.

Primer Mixtures. A primer mixture is an explosive sensitive to a blow such as that imparted by a firing pin. It is used to transmit a shock or a flame to another explosive, a time element, or a detonator. In general, primer mixtures consist of mercury fulminate, potassium chlorate, and antimony sulfide, with or without ground glass, and a binder. Primer mixtures are used in the percussion elements of fuzes.

CAUTION

Some of the foregoing explosives are described as relatively insensitive. But, always remember to treat all explosives with respect at all times.

FUZES

A fuze is a mechanical device which sets off a bomb at the desired instant. It contains the following parts of the explosive train: primer, delay (if any), detonator, and booster.

NOTE: Complete details on bomb fuzes are contained in TO 39B-15-1.

A firing pin initiates the explosive train in all fuzes, except for the VT type. The VT does not have a firing pin — it has an electric detonator.

In fuzes equipped with firing pins, the firing pin may be actuated as a result of impact force, clockwork action, chemical action, or water pressure. This pin strikes the primer, just as the firing pin of a rifle strikes the primer of a cartridge. The explosion of the primer sets off the explosive train.

The VT fuze is set off by an electric charge flowing through an electric detonator.

Position in Bomb

Fuzes are classified according to position in the bomb. The positions are nose and tail. Both positions are illustrated below.

The positions of fuzes depend on the design of the bomb. Some bombs use only one fuze — others use two. For example, the 23-lb. fragmentation bomb, shown below, uses a nose fuze only. The 1,000-lb. GP bomb uses both a nose fuze and a tail fuze.

Arming

For safety reasons, a bomb must be incapable of exploding before it is clear of an aircraft. Fuzes are, therefore, equipped with arming devices. Two kinds of arming devices are in use: vane type and pin type.

Fuze Positions

23-lb. Fragmentation Bomb (with parachute unit)

Digitized by Google

The arming-vane type has a metal vane which is rotated by the air as the bomb falls. When the vane has rotated the required number of times, the fuze is armed. The components and action of the arming vane system are shown below.

The arming-pin type has a small metal pin which is ejected from the fuze upon release of the bomb, or shortly thereafter. The ejection of the pin releases the arming mechanism, which arms the fuze. This action is illustrated at the right.

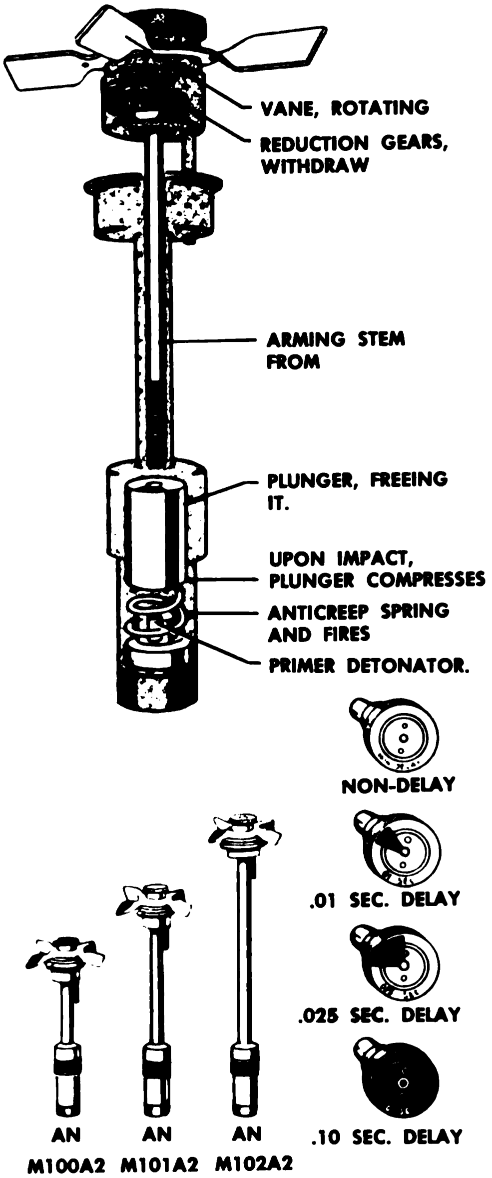

Action of Arming Vane

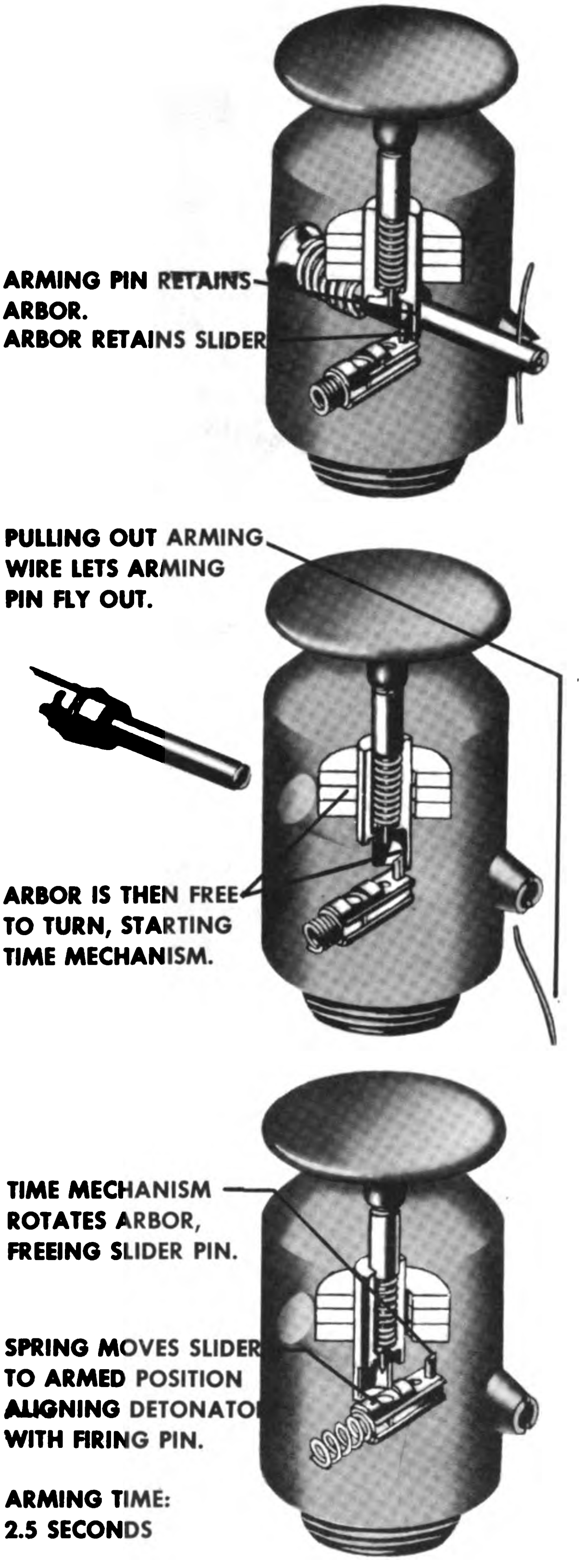

Action of Arming Pin

Digitized by Google

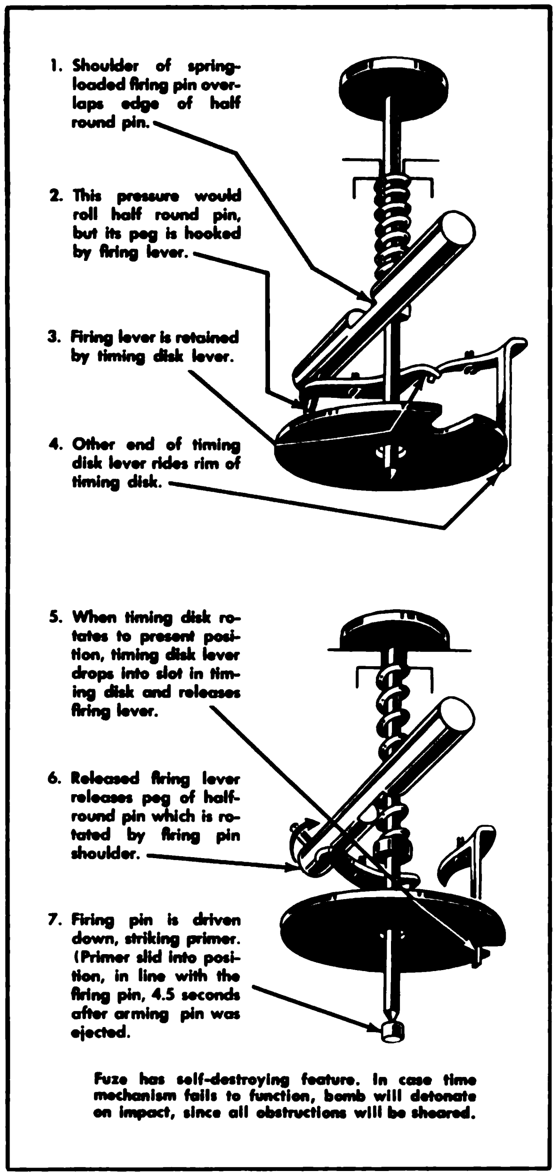

1. Shoulder of spring-loaded firing pin overlaps edge of half round pin.
2. This pressure would roll half round pin, but its peg is hooked by firing lever.
3. Firing lever is retained by timing disk lever.
4. Other end of timing disk lever rides rim of timing disk.
5. When timing disk rotates to present position, timing disk lever drops into slot in timing disk and releases firing lever.
6. Released firing lever releases peg of half-round pin which is rotated by firing pin shoulder.
7. Firing pin is driven down, striking primer. (Primer slid into position, in line with the firing pin, 4.5 seconds after arming pin was ejected.

Fuze has self-destroying feature. In case time mechanism fails to function, bomb will detonate on impact, since all obstructions will be sheared.

Mechanical Time Fuze — Principles of Functioning

Action

Fuzes are classified according to type of action or functioning.

Time Fuzes. These function to explode the bomb a cartain number of seconds after release. They are used to produce air bursts. Their functioning is similar to that of an alarm clock. They may be used in the nose or tail. The functional principles of a time fuze are illustrated to the left.

Impact Fuzes. Impact fuzes begin their function when the bomb strikes a resistant material. Fuzes classed as instantaneous or nondelay act to explode the bomb immediately. Those classed as delay contain an element which delays the explosion of the bomb until a definite time has elapsed. Some delay elements depend on the burning of a powder train. Others depend on chemical action. Impact fuzes are either nose or tail types. Both types are shown on page 149.

Hydrostatic Fuze. This fuze, shown on page 150, acts under the influence of water pressure to explode the bomb a predetermined depth below the surface. It has a bellows or diaphragm operating against a spring of fixed strength. When the external pressure overcomes the resistance of the spring, the firing pin is released and driven against the primer by spring action. This fuze is used in the tail position only.

VT Fuzes. VT proximity fuzes are, essentially, radio transmitting and receiving units. They detonate the bomb on approach to the target. In flight, the fuze broadcasts a radio signal which is continuous. When this signal is reflected from any object to the armed fuze,

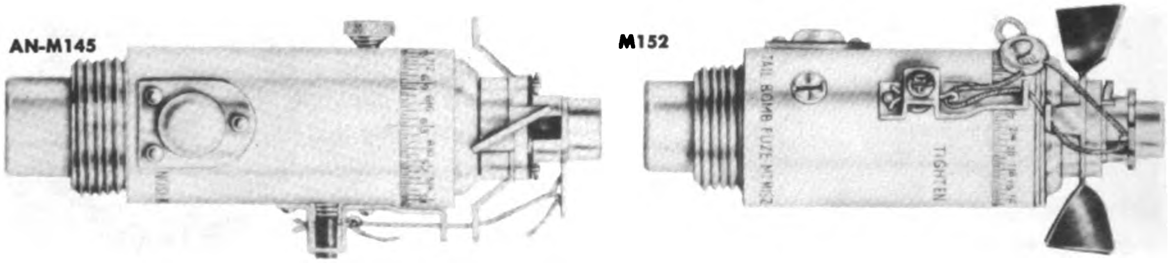

AN-M145

M152

Typical Mechanical Time Fuze

Digitized by Google

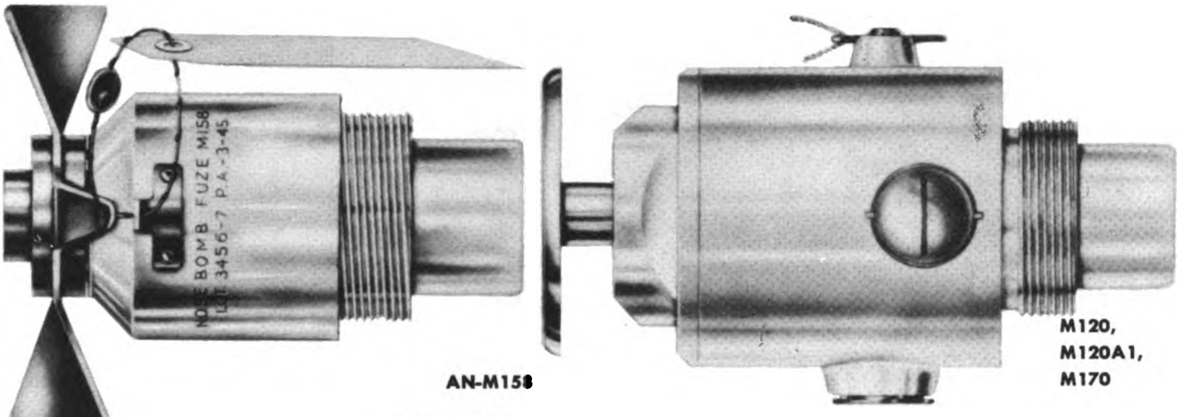

Typical Impact Fuze — Nose Type

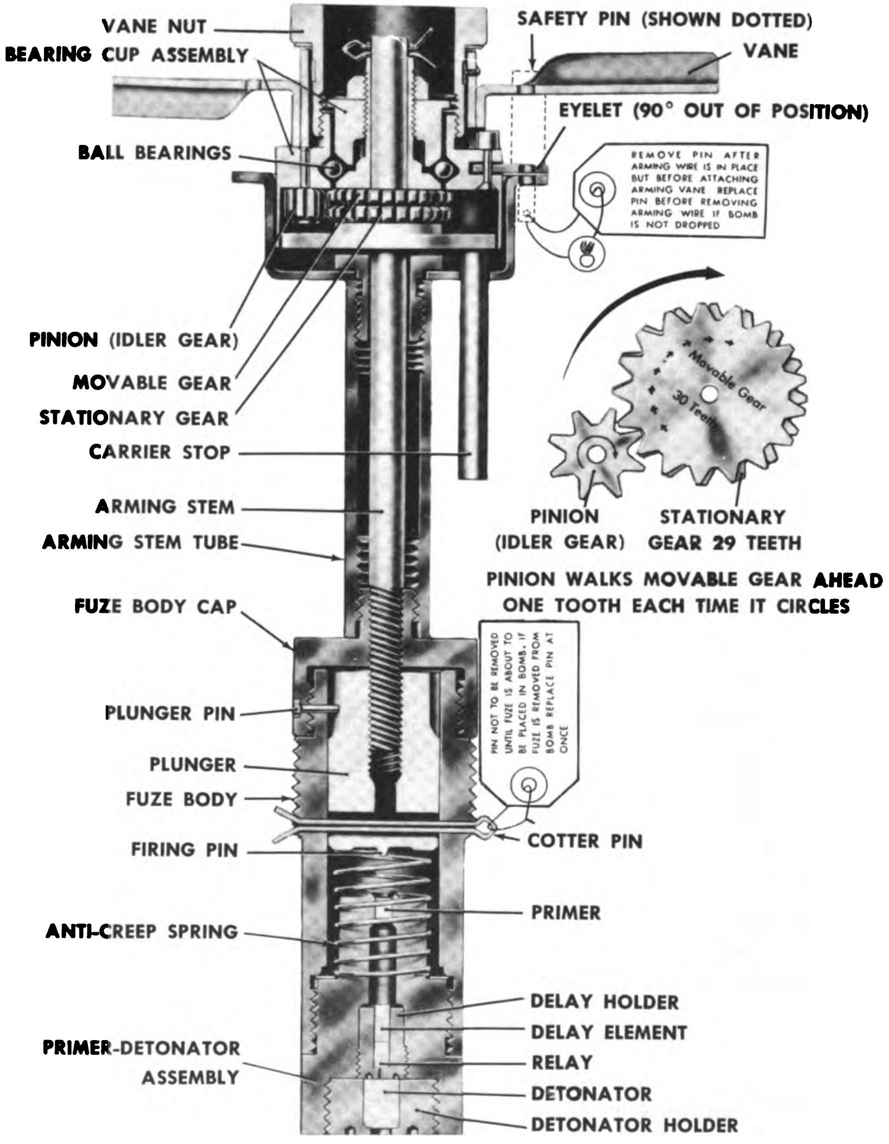

Typical Impact Fuze, Tail Type

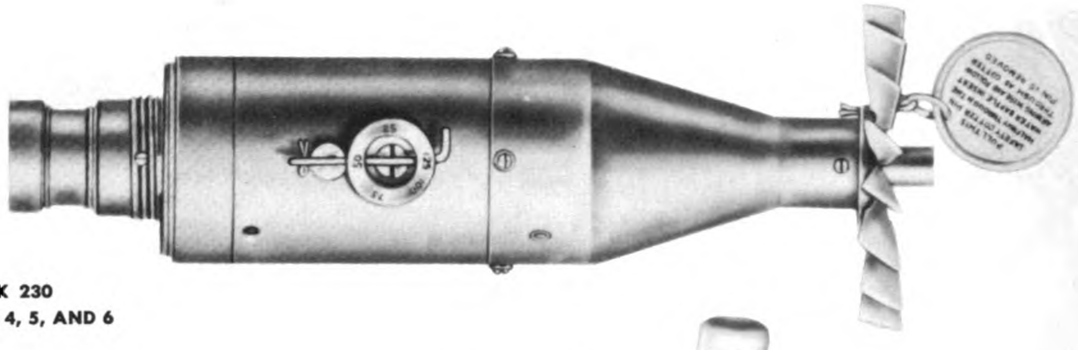

AN-MK 230
MODS 4, 5, AND 6

Hydrostatic Fuze

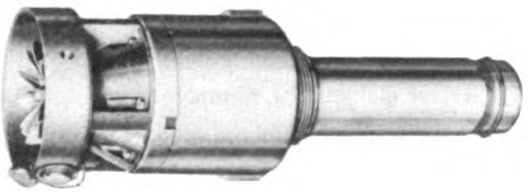

RING TYPE

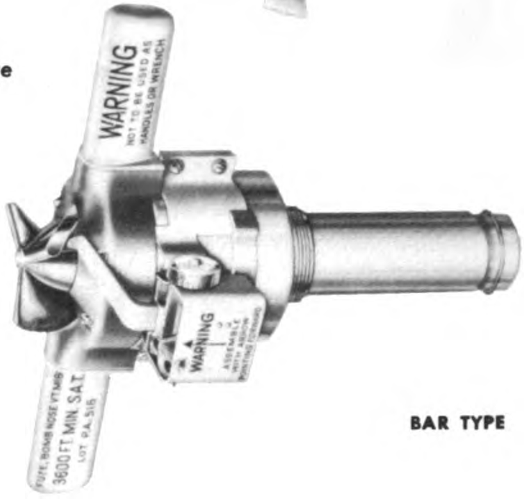

BAR TYPE

VT Fuzes

it interacts with the transmitted wave to produce ripples or beats. When the beat reaches a predetermined intensity, it trips an electronic switch which permits an electric charge to flow through an electric detonator. A VT fuze may profitably be employed in any operation in which air burst at heights between 10 and 250 feet will increase the effectiveness of the bomb. In its ability to produce an air burst, the VT fuze is similar to the time fuze. But the action of the time fuze is governed by elapsed time after arming, and the action of the VT is governed by distance from the target. VT fuzes are always installed in the nose position. They come in two forms: bar type and ring type. The principles of operation are the same in both. VT fuzes are illustrated above.

Care and Precaution in Handling Fuzes

A fuze is dangerous if mishandled. Moreover, mishandling or tampering with a fuze may cause it to become inoperative and therefore cause the bomb to be a dud.

a. Never tamper with or try to disassemble a fuze.

b. Never force a fuze into the bomb case, handtight is sufficient.

c. Never use tools to tighten a fuze, unless the specific fuze calls for use of such tools.

d. Discard all fuzes that are corroded.

e. Never hold a fuze by its detonator.

f. Never try to remove a delayed-action fuze.

Fuzes should be protected against shock, moisture, and high temperature. They may be stored with primers, primer-detonators, detonators, boosters, bursters, and small-arms ammunition. Chemically actuated fuzes containing ampoules which may initiate, directly or indirectly, explosive and explosive-loaded components, must be stored separately. Unserviceable material will be destroyed by

Digitized by Google

authorized and experienced personnel in accordance with the provisions of TO 11A-1-20.

Interchangeability of Fuzes

When it is desired to use another model in place of the fuze authorized, because either the standard model is not available or the special action of another fuze is desired, the following conditions must be fulfilled:

a. *The fuze must fit mechanically.* The fuze must fit physically in the fuze seat of the bomb or an adapter must be used to furnish such fit.

b. *The fuze must fit functionally.* The fuze must be able to arm and operate properly under normal conditions of use. For example, short tail fuzes will not arm if used on larger bombs. Also, the arming time of the selected fuze must meet safety requirements.

c. *The explosive train must be completed by combination of bomb and fuze.* That is, all elements — detonator, booster, and main charge — must be present. Some fuzes contain detonator only, and if these are used in a fuze seat liner without a booster, low order detonation or a dud may result. Other fuzes have a black powder igniter in place of the booster element, and if these are used in high-explosive bombs, the igniter will not reliably initiate the booster or charge.

d. *The components of the explosive train must be in proximity.* That is the detonator, booster, and main charge must be sufficiently close so that the detonation wave is not materially weakened in passing from one element to the next. Some fuzes have short boosters, and if these are used in deep fuze seats, the space must be filled with an auxiliary booster or similar explosive charge. Otherwise a low order detonation or dud may result.

BOMBING EQUIPMENT

The bombing equipment of an aircraft has three main functions:

a. To carry the bombs while the plane is in flight.

b. To release the bomb at the right moment.

c. To arm the bomb.

The first of these functions is performed on fighter aircraft by the bomb racks. The bombing equipment controls provide for expeditious release and proper arming of bombs. These two groups of equipment are described in a general way below. Detailed information on the bombing equipment for any fighter bomber aircraft may normally be found in section IV of the flight handbook for that aircraft.

Bomb Racks

A removable bomb rack is installed on the lower surface of each outer wing panel in the manner illustrated on the next page.

The type S-2 bomb rack has been chosen for illustration above because it is typical of bomb racks presently used. It is an electrically controlled unit which operates on 24-volt DC. It is a self-contained double hook rack and carries all standard bombs up to and including the 1,700-lb. M10 bomb. The rack may also be used to mount and operate the M33 chemical tank.

The F-86F-25 and similar fighter aircraft are equipped with four external load stations; however, only the inboard stations may be used for bombs. Each bomb rack will carry single bombs from 100 to 1,000 pounds, or one R-3 fragmentation bomb rack can be installed on each empty wing bomb rack. Typical bomb loads and loading techniques for fighter aircraft are shown in the illustration on page 153.

Bombing Equipment Controls

Controls are provided for normal or emergency release of either demolition or fragmentation bombs. Normal release may be accomplished automatically or manually, with bombs released singly or simultaneously. The condition of bomb nose and tail fuzes, upon release, is selectively controlled. Bomb aiming and automatic release are accomplished through the gun-bomb-rocket sight. In case of an electrical failure, a mechanical emergency release system is available.

These instruments appear in the illustration of the bombing equipment control panel, on page 153. They are described, and their operation explained, in the remainder of this chapter.

BOMB-ROCKET RELEASE BUTTON. Bomb-and-rocket release circuits are energized (after

Digitized by Google

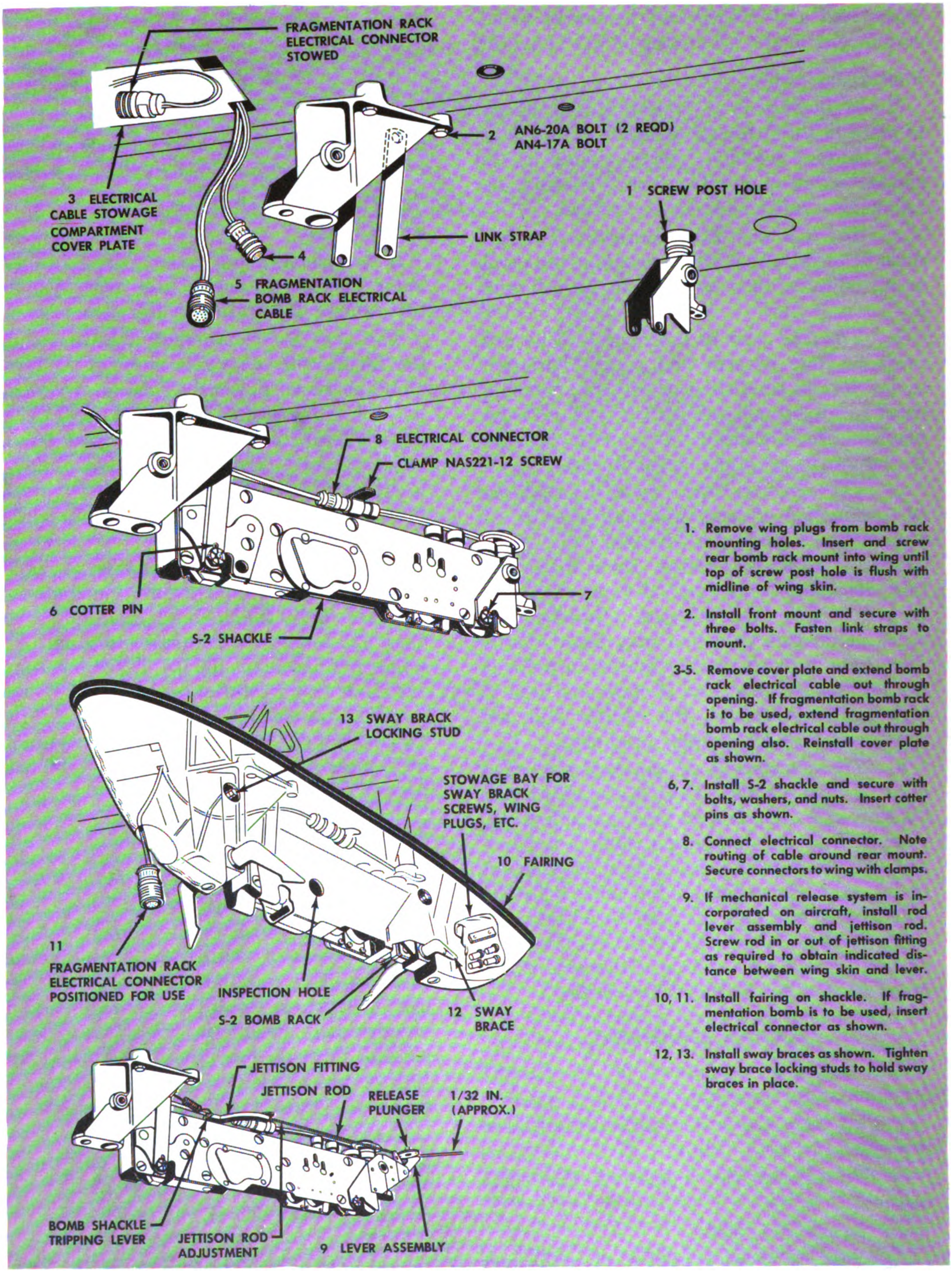

1. Remove wing plugs from bomb rack mounting holes. Insert and screw rear bomb rack mount into wing until top of screw post hole is flush with midline of wing skin.

2. Install front mount and secure with three bolts. Fasten link straps to mount.

3-5. Remove cover plate and extend bomb rack electrical cable out through opening. If fragmentation bomb rack is to be used, extend fragmentation bomb rack electrical cable out through opening also. Reinstall cover plate as shown.

6, 7. Install S-2 shackle and secure with bolts, washers, and nuts. Insert cotter pins as shown.

8. Connect electrical connector. Note routing of cable around rear mount. Secure connectors to wing with clamps.

9. If mechanical release system is incorporated on aircraft, install rod lever assembly and jettison rod. Screw rod in or out of jettison fitting as required to obtain indicated distance between wing skin and lever.

10, 11. Install fairing on shackle. If fragmentation bomb is to be used, insert electrical connector as shown.

12, 13. Install sway braces as shown. Tighten sway brace locking studs to hold sway braces in place.

Method of Bomb Rack Installation on Fighter Aircraft

Digitized by Google

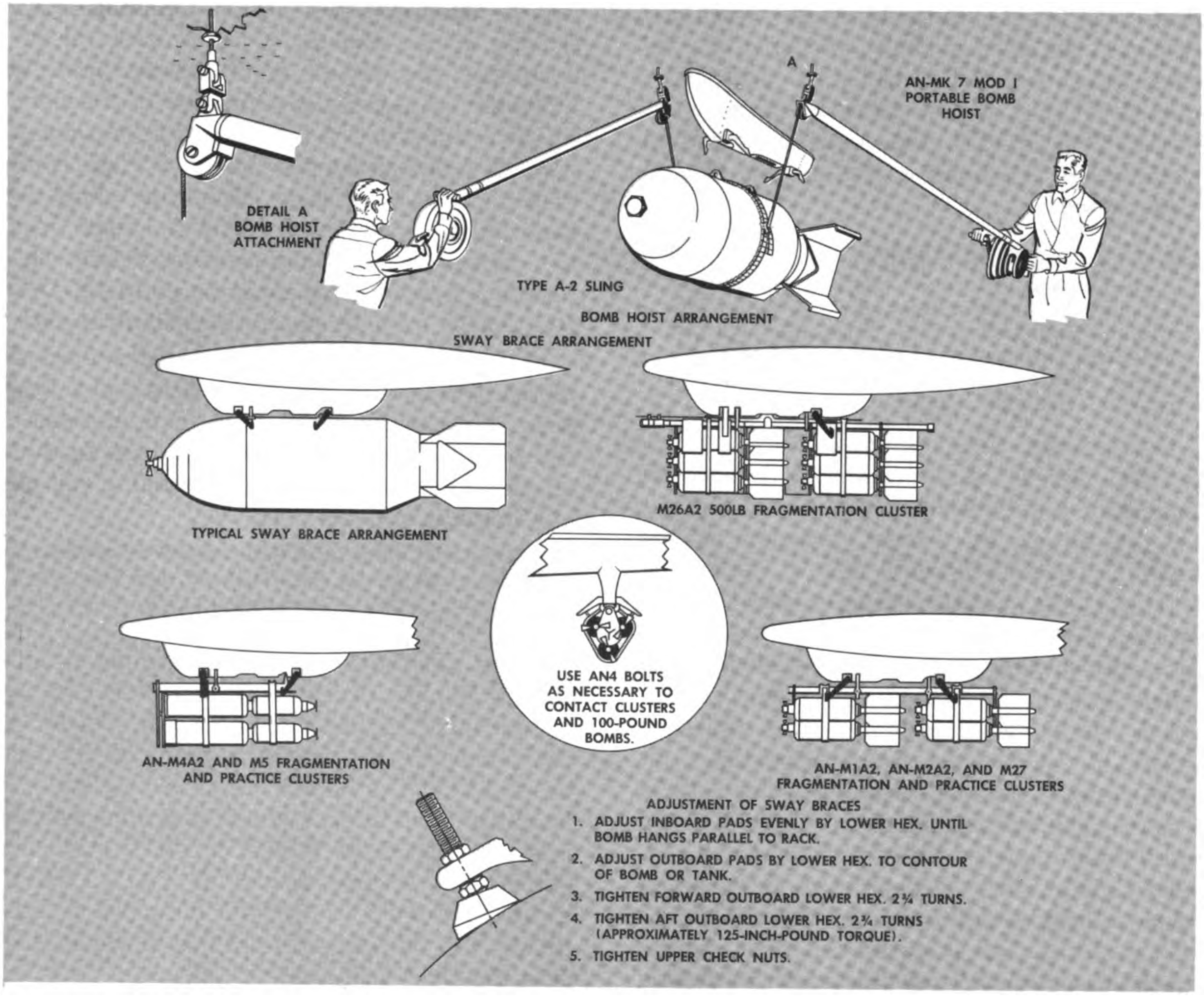

ADJUSTMENT OF SWAY BRACES

1. ADJUST INBOARD PADS EVENLY BY LOWER HEX. UNTIL BOMB HANGS PARALLEL TO RACK.
2. ADJUST OUTBOARD PADS BY LOWER HEX. TO CONTOUR OF BOMB OR TANK.
3. TIGHTEN FORWARD OUTBOARD LOWER HEX. 2¾ TURNS.
4. TIGHTEN AFT OUTBOARD LOWER HEX. 2¾ TURNS (APPROXIMATELY 125-INCH-POUND TORQUE).
5. TIGHTEN UPPER CHECK NUTS.

Bomb Loads and Loading Techniques

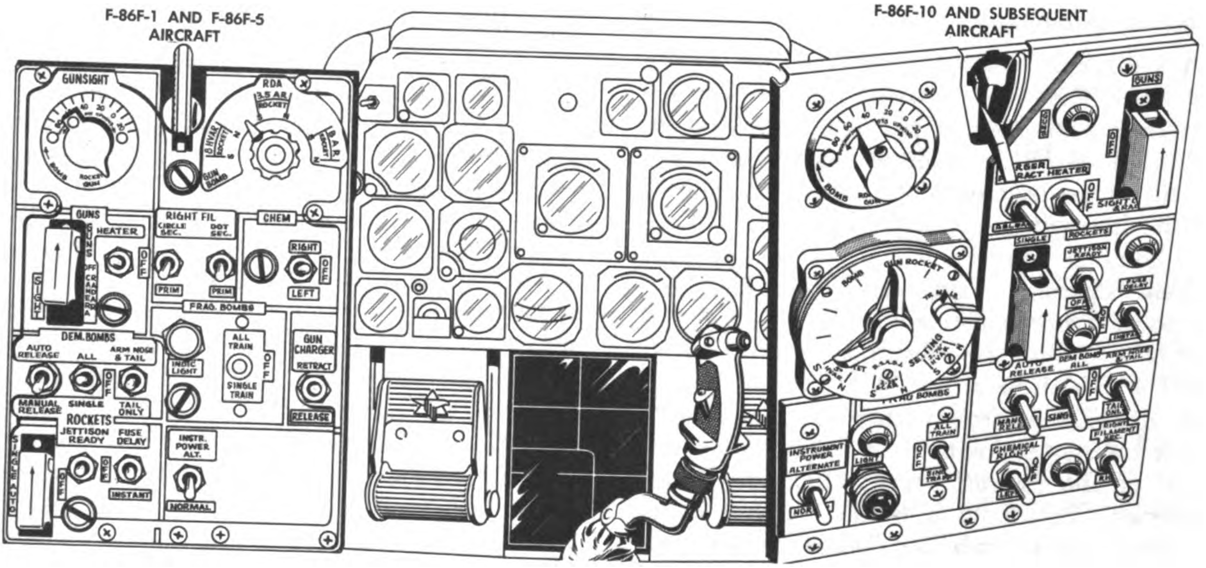

Center Pedestal

the applicable selector switches have been positioned for the desired release condition) by power from the primary bus when the release button on the control stick grip is depressed. If the rocket release switch is at SINGLE or AUTO, gun camera operation occurs when the bomb-rocket release button is depressed.

CAUTION

Before actuating the bomb-rocket release button, be sure the bomb-and-rocket release selector switches and the rocket jettison switch are positioned correctly for the desired release condition. Failure to check switch positioning may result in accidental bomb or rocket release.

Demolition bomb single-all selector switch. Single or simultaneous release of demolition bombs is accomplished, with primary bus power, by proper placement of the single-all selector switch and a depression of the bomb-rocket release button, on the control stick grip. The demolition bomb single-all selector switch is a three-position toggle switch (SINGLE, OFF, and ALL). When the single-all selector switch is set at SINGLE, depressing the bomb-rocket release button will trip the left bomb rack. A transfer circuit within the racks permits the right bomb rack to be tripped when the release button is again depressed. Both bomb racks will trip simultaneously when the single all selector switch is positioned at ALL and the bomb-rocket release button is depressed.

Note: Demolition bomb single-all selector switch is inoperative if fragmentation bomb selector switch it not OFF.

Demolition bomb release selector switch. The two-position release selector switch on the center pedestal provides for selection of either manual release or automatic release by means of primary bus power. With the switch at MANUAL RELEASE, the bomb is released when the bomb-rocket release button is depressed (provided the demolition bomb single-all selector switch is not OFF). With the release selector switch at AUTO RELEASE and the release button held closed, the bomb is released automatically by a mechanism within the sight when the path of the aircraft on the bombing spiral becomes tangent to a bomb trajectory. (If the demolition bomb single-all selector switch is in the SINGLE position, only one bomb will be dropped during each bombing run.) During either manual or automatic release condition, the correct bomb release point is indicated by automatic extinction of the sight reticle image circle. A red flashing bombs-away light is reflected on the reflector glass from within the A-1CM sight when the bomb release circuit is energized. (The A-4 sight does not incorporate the bombs-away light.) The release selector switch must be at MANUAL RELEASE for a fragmentation bomb release.

Manual releases are in most cases now wired inoperative so that deliberate cutting of safety wire is necessary before the manual release can be activated. This has been done so that an advertent or accidental manual release of a bomb is unlikely.

Note: The demolition bomb single-all selector switch must be at SINGLE or ALL for the demolition bomb release selector switch to be operative.

Bomb arming switch. The arming condition of bombs, except fragmentation bombs, is controlled by the arming switch. Power to the bomb arming switch is supplied by the battery bus. The bombs are armed to explode instantly upon impact when the arming switch is set at the ARM NOSE & TAIL position. Setting the arming switch at TAIL ONLY arms the bombs for delayed detonation. The bombs will be released unarmed if the switch is in the OFF position.

Fragmentation bomb selector switch. The fragmentation bomb selector is used only for release of fragmentation or 3-pound practice bombs. Placing the switch at SINGLE TRAIN results in release of fragmentation bombs in a train, from the left rack and then from the right, as long as bomb-rocket release button is held depressed. When the fragmentation bomb selector switch is at the ALL TRAIN position, holding the release button depressed releases the bombs in a train from left and right racks simultaneously. The arming condition of fragmentation bombs cannot be controlled during a normal release, as the bombs are automatically armed upon leaving the racks. Whenever fragmentation bombs are to be released, the demolition bomb release selector switch must be at MANUAL RELEASE.

Digitized by Google

CHAPTER 4

harmonization

Harmonization is the adjustment of the guns and sight of an aircraft so that when in flight and within effective range the sight line will indicate the path of the bullets.

The primary usefulness of the fighter aircraft comes from its high speed and great maneuverability. When these characteristics are combined with capable armament and accurate fire control equipment, this type of aircraft becomes a deadly combat weapon against airborne and ground targets. In order to combine this armament with the speed and maneuvering capabilities of our newer aircraft into a powerful, effective weapon, all three of the component equipments — the sight and its accessories, the projectile-launching equipment, and the aircraft — must be carefully adjusted to give the greatest accuracy of fire. The mutual tying-in of these elements for this purpose is, in effect harmonization.

This chapter deals with the basic problems of harmonization and the importance of harmonization to gunnery.

The actual mechanics of harmonization — correction for parallax, setting the computer angle to provide for cross-roll correction, preparation of aircraft for firing-in — are discussed. The special tools and instruments used to accomplish this harmonization are described. The final portions of the chapter treat techniques used to harmonize aircraft for gun camera photography and rocket firing.

IMPORTANCE OF HARMONIZATION

The importance of accurate harmonization can very readily be seen by studying the dispersion pattern of a caliber .50 machine gun at 1,000 feet. A machine gun is not a precision instrument by any means. A study of dispersion pattern will reveal that 100% hits on a standard target is not possible at every firing range, even with perfect aim. This cone of dispersion is the sum of all the flight paths of all the bullets fired from a gun. This dispersion is measured, in terms of mils, by the angle of the triangle formed from the muzzle of the gun to the diameter of the area of hits. Acceptable cones of dispersion with caliber .50 ammunition occur when 75% of all rounds fired hit within a 4-mil cone and 100% of all rounds fired hit within a 8-mil cone. This proper bullet dispersion pattern is shown on the next page. However, the cones of dispersion for ammunition of different calibers are not the same.

THE BASIC PROBLEM

The simplest example of the harmonization problem is illustrated by the infantryman with his rifle. With the sight line established by his front and rear sights, he adjusts his gun line until the bullet trajectory and the sight line intersect at the target. In fighter aircraft the basic problem is exactly the same, although the attainment of proper aiming is more involved, for many reasons. Some of

Digitized by Google

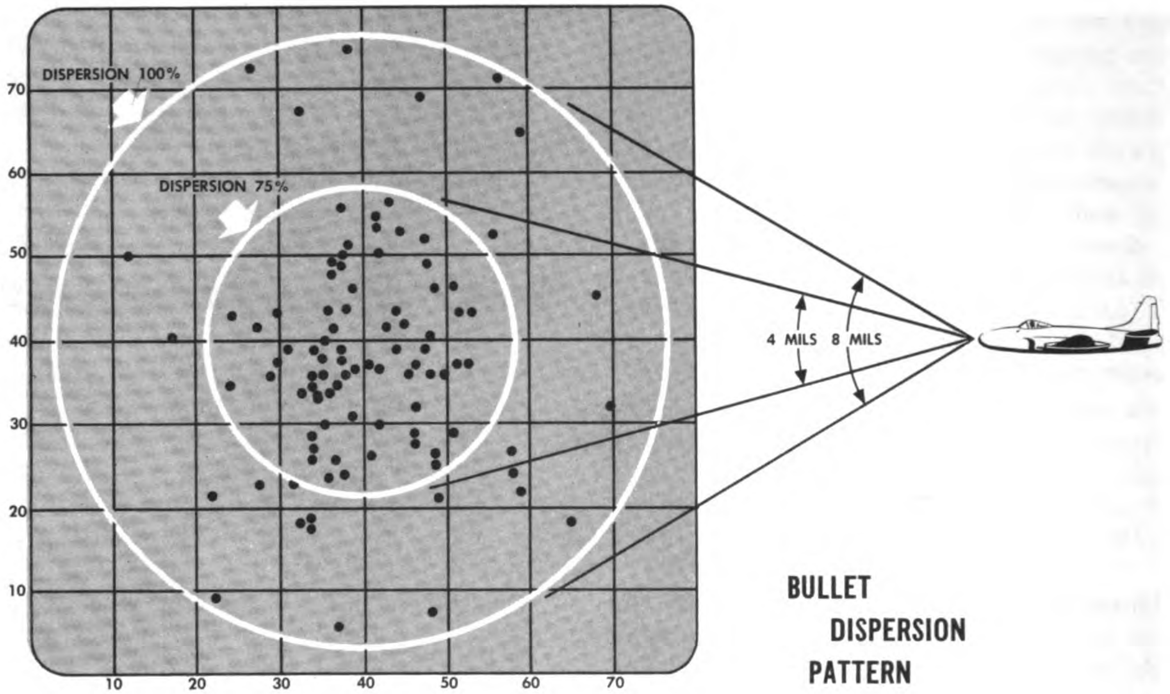

BULLET DISPERSION PATTERN

these reasons are the fixed nature of fighter aircraft armament, the high velocity of the aircraft, the varying conditions of altitude, speed, and direction under which it must operate, and the variety of targets it must engage.

With *fixed* armament, a projectile which is discharged from an aircraft has a trajectory that is determined by the position of the aircraft at the instant of release. For example, the caliber .50 machine gun, regardless of its actual location in the fighter aircraft, is bolted rigidly to the airframe and can be aimed only by aiming the aircraft. Similarly, rockets are launched from rails or tubes rigidly attached to the aircraft, and bombs are dropped from racks bolted to the airframe. In all three cases, the projectile is aimed by pointing the aircraft.

REFERENCE LINES USED IN HARMONIZING

Harmonization concerns basically the orientation of three reference lines contained within the aircraft — the fuselage reference line, the caged sight line, and the gun line or mean gun line.

Fuselage Reference Line

The aerodynamic angle of attack establishes the direction of the flight path with respect to the no-lift line of the wing. For harmonization purposes this angle is of little practical use, because the no-lift line cannot be readily located. A more accessible reference line is furnished by the set of leveling lugs installed in the side of the fuselage during manufacture, which can be alined with the longitudinal axis of the aircraft as shown in the illustration below. In effect, the fuselage reference line

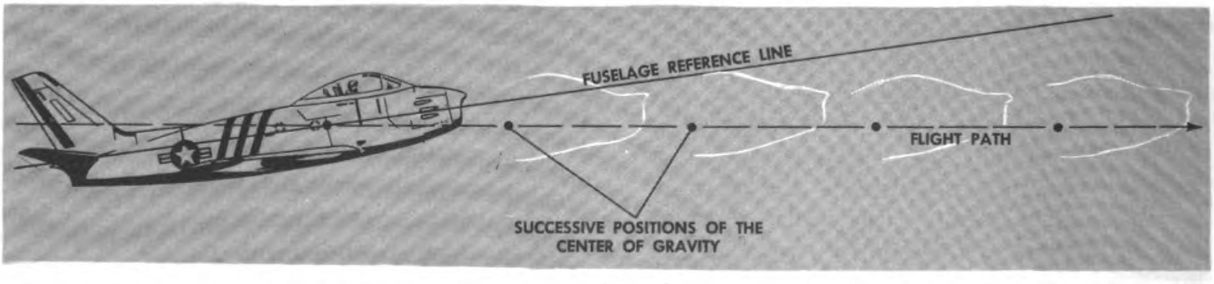

Flight Path

Digitized by Google

is used to determine the angle of attack for a given airspeed and load condition.

Sight Line

As critical in proper harmonization as the flight path is the sight line — the line established by the center dot, or pipper, or the tracking index. It has been found that, when a target is tracked, the aircraft can be flown most easily if the sight line is parallel to the flight path. This means that the pilot looks exactly in the direction the aircraft is moving, and there is no consequent tendency for the pipper to be carried off the target. It is not always possible to aline the caged sight line parallel to the flight path, but it should be attempted whenever practicable.

Gun Line

In harmonizing the gun lines relative to the flight path and sight line, it is more convenient to use the mean gun line or average gun line of several guns. The alinement of the mean gun line relative to the flight path is a very important factor to be considered when harmonizing any type of aircraft. If the gun lines or mean gun line are not pointed parallel to the flight path, or not directly into the relative wind, velocity jump or trajectory shift is induced which may or may not be compensated for by the fire control system. However, if the gun lines or mean gun line are parallel to the flight path no trajectory shift or velocity jump results.

With some types of fighter aircraft, alining the mean gun line, or fixed bore line as it is sometimes called, parallel to the flight path is not always possible. The primary reason for this is that the amount of gun adjustment is too small. Consider, for example, an aircraft which has an angle of attack of 20 mils nose up at the indicated airspeed and loading condition for which it has been harmonized. The guns are installed parallel to the fuselage reference line and have a total adjustment of ½° or 8.89 mils. In this particular case, therefore, it would be impossible to depress the guns or mean gun line down to a point where they would parallel the flight path.

These two reference lines are indicated by dotted lines in the illustration on this page. Velocity jump or trajectory shift will be discussed in more detail later on in the chapter.

TYPES OF HARMONIZATION

In the typical multiple-gun fighter installation, the several gun lines can be harmonized to give any one of three gunfire patterns, namely, *parallel*, *point*, or *pattern* harmonization. Special techniques may be used to harmonize the guns on aircraft of the F-86 type.

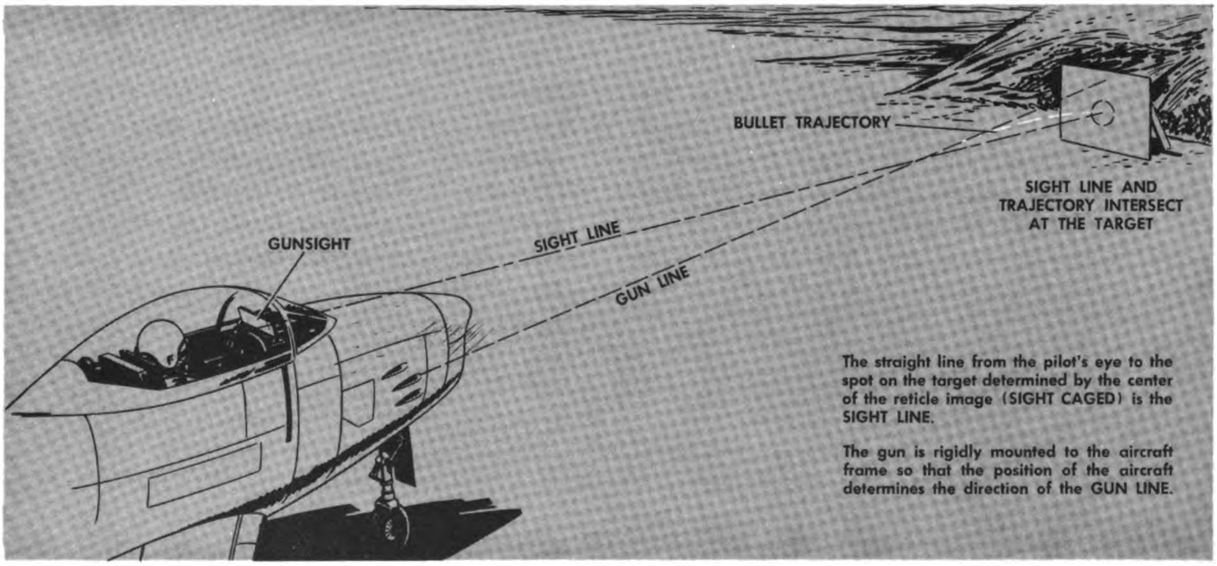

The straight line from the pilot's eye to the spot on the target determined by the center of the reticle image (SIGHT CAGED) is the SIGHT LINE.

The gun is rigidly mounted to the aircraft frame so that the position of the aircraft determines the direction of the GUN LINE.

Gunfire from a Fixed-Gun Fighter Aircraft

Digitized by Google

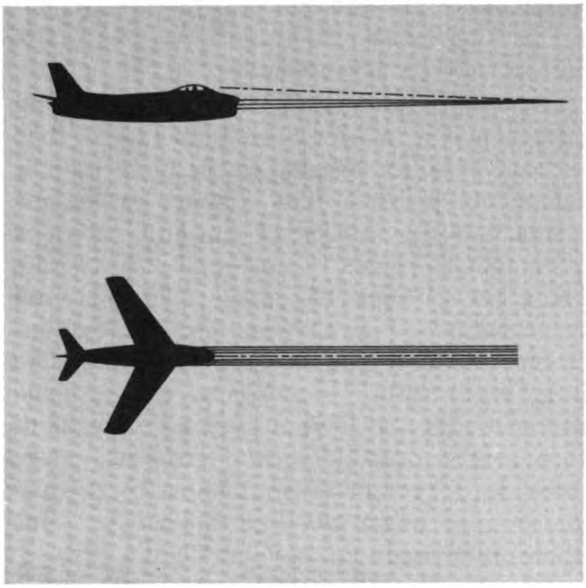

Parallel Harmonization

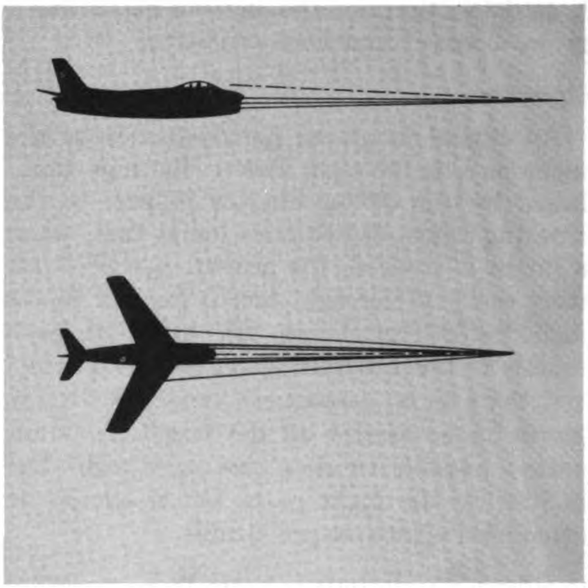

Point Harmonization

Parallel Harmonization

In parallel harmonization all guns and the caged sight line are alined parallel to the flight path as shown in the first illustration on this page. This system has two advantages. One is that the total bullet dispersion from all the guns thus alined is, of course, an increase over the dispersion resulting from firing a single gun. Consequently the probability of scoring hits is increased. A second advantage is that this is the simplest type of harmonization.

Point Harmonization

When guns are well outboard from the centerline of the aircraft, as when they are mounted on the wings or in twin fuselages, a parallel pattern will seriously reduce the bullet concentration. To avoid this, point harmonization is used. As shown in the diagram above, all guns are adjusted so that the gun lines intersect at a point ahead of the aircraft. This will concentrate the fire of all guns on a single small area at the selected range from the aircraft.

It may be desirable to harmonize in the manner described under parallel harmonization with the exception that the individual trajectories of the guns are harmonized upon a single point for more density of fire.

Pattern Harmonization

When the largest pattern of uniform lethal density over the entire effective range is desired, converge the trajectories of different guns at different points along the sight line. This pattern lacks depth and sacrifices density of fire for variation of range convergence.

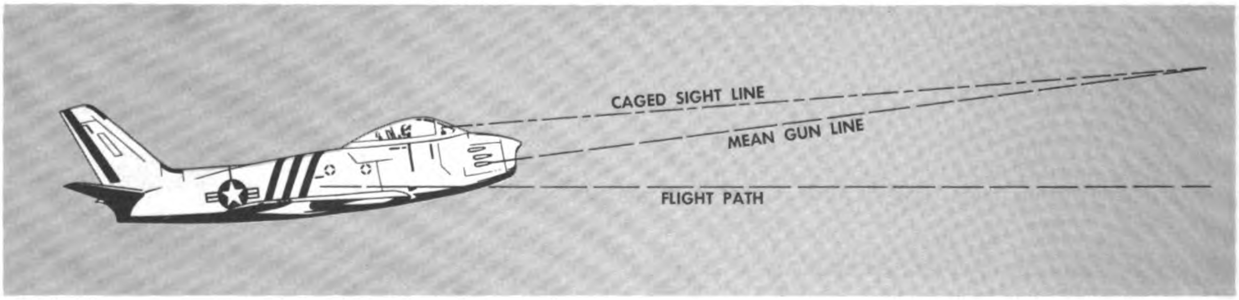

Harmonization of F-86 Aircraft

Digitized by Google

Special Harmonization

The F-86A, -E, and -F aircraft raise a special problem in harmonization, because there is insufficient adjustment in the gun mountings to bring the guns down to parallelism with the normal flight path. The diagram on the previous page indicates how this problem is usually met by alining the caged sight line with the mean gun line. No attempt is made to harmonize around the flight path position. The one exception to this solution of this problem is the *Nellis* method of harmonization for the F-86 type of aircraft, which is discussed in detail in appendix VI.

BALLISTIC FACTORS

There are four *major* forces which affect any projectile when fired from an aircraft while in flight. The combination of these forces determines the path of the bullet.

a. The *propellent force* furnishes the greater part of the bullet velocity. It comes from the explosive charge which forces the projectile out of the barrel and through the air.

b. *Aircraft movement* produces a smaller but important component of the total bullet velocity. Under normal conditions, where the gun is firing along the flight path of the aircraft, this speed is merely added to the muzzle velocity. If, however, the gun does not fire along the flight path of the aircraft, as is the case while skidding or mushing, both the velocity of the bullet and its initial direction will be changed. The bullet path will be in the direction of the resultant of the two velocities.

c. *Air resistance* retards the bullet, causing it to lose speed from the moment it leaves the gun. As this resistance varies with the density of the air, the effect will become less at higher altitudes. At the closer ranges, air resistance has little effect. However, a bullet fired from 1,200 feet away will have lost about one sixth of its initial velocity by the time it hits the target.

d. *Gravitational force* causes the bullet to start falling the instant it leaves the support of the gun barrel. Except for the effect of air resistance, the bullet drops just as fast as any other falling object. This force is independent of the forward motion of the projectile and increases as the square of the time of flight.

In addition to the four major forces acting on the bullet, the following *minor* effects are known to exist. However, they have little importance so far as gunnery is concerned.

a. One effect is *bullet drift due to rotation.* Rifling (lands and grooves) in the barrel gives the projectile a clockwise rotation motion which is necessary to stabilize its path and prevent tumbling. This rotation causes a slight drift to the right, but the amount is so slight that it is considered negligible.

b. *Bullet jump* is due to a relative wind not along the line of bore, which causes the projectile to jump as it emerges from the gun muzzle. This effect is the result of a difference of velocity, in accordance with aerodynamic principles. The relative wind and the rotation of the projectile produces a higher relative velocity (with respect to air and bullet surface) on one side of the bullet than the other. This causes a difference in pressures and makes the bullet jump. The amount of jump in firing fixed gunnery is so small it, too, is considered negligible.

c. *Bullet yaw* is a secondary rotation or yaw about the center of gravity somewhat comparable to the wobble of a spinning top. It is in addition to the spin imparted by the rifling. This yaw is due primarily to the shape of the projectile, which causes the air resistance to be concentrated ahead of the projectile's center of gravity. This yaw is very slight, and usually in less than a second the bullet yaw will have decreased allowing the projectile to fly smoothly.

Although all the bullets fired from an aircraft machine gun in one burst will be affected similarly by both major and minor forces, and effects, they will not have identical flight paths. The sum of all their trajectories is the cone of dispersion.

TRAJECTORY SHIFT

Trajectory shift or *velocity jump* is the angular displacement of the bullet flight path away from the gun bore axis toward the flight path of the aircraft. The resultant path of the bullets is commonly referred to as the effective bore of the guns as differentiated

Digitized by Google

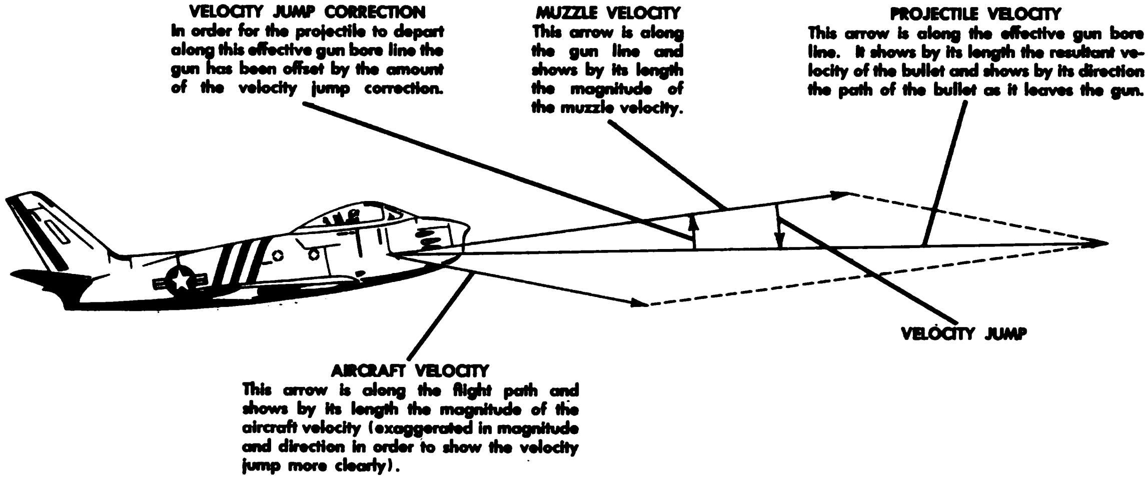

Trajectory Shift or Velocity Jump in Relation to an Aircraft

from the fixed bore of the guns, or the gun bore axis. This angular shift or velocity jump has been exaggerated in the drawing on this page in order to demonstrate this phenomenon more clearly.

NOTE: Trajectory shift should not be confused with gravity drop or any other ballistic effect.

Trajectory shift is produced by the effect of the gun platform moving in a direction different from that of the fixed bore line of the guns. The effective bore line is merely the vector resultant of the two vectors. The trajectory shift angle can be calculated rapidly and accurately by applying the law of cosines and then the law of sines to the triangle. Refer to appendix VI for derivation of this formula.

An observer standing on the ground would see the projectile depart along the effective bore line (line AB in the diagram below.) He is stationary with respect to what will be termed the fixed axes, or stationary frame of reference. An observer in the aircraft would see the projectile depart along line AC, the fixed bore line. The observer in the aircraft is stationary with respect to the moving axes, or a frame of reference which has the origin of its axes fixed in the gun platform.

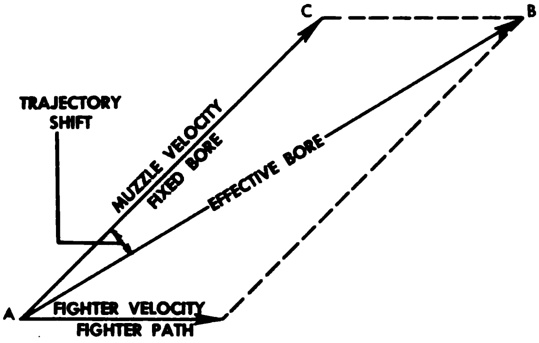

Trajectory Shift Showing Effective Bore

It is apparent that the observer in the aircraft cannot devise an experiment with which to evaluate the trajectory shift correction. To him, trajectory shift does not exist, regardless of the motion of the fighter aircraft, since the projectile always bears the same relationship to this observer at the instant of firing. Obviously the gun platform has no velocity with respect to an observer stationary in the moving axes; therefore, he can see no addition to the velocity of the projectile because of his own motion.

On the other hand, an observer on the ground or stationary with respect to the fixed axes must evaluate and compensate for the trajectory shift or he will arrive at an erroneous prediction angle. This is because the observer on the ground, in the fixed axes, has no means of separating the velocity of the projectile with respect to the ground. A shift in fighter attitude with respect to its flight path introduces a shift in effective bore line for the observer in the fixed axes.

Since computations are made in the fighter and referenced to the moving axes, there is no

Digitized by Google

need for compensation of the trajectory shift when a full gyro computing sight is utilized, providing the sight has proper range input and is properly calibrated. Trajectory shift is a quantity which can only be measured in a frame of reference moving with respect to the gun station.

THE GUNNERY PROBLEM

Computation of Prediction Angle

A gyro computing sight such as the A-1 or A-4 generates what is termed a *prediction angle*. This angle is diagrammed below.

The prediction angle may be defined as the angle between the line of sight to the target at its present position and the gun line necessary to hit the target at its future position. It is the vector sum of gravity drop, lead angle and trajectory shift.

The lead angle may be defined as the angle swept out by the tracking line and line of sight to the target during the time the projectile is in flight.

All measurements made by a computing sight are referenced only to the moving axes. The angular velocity and range of a particular target aircraft is determined by measurements which are independent of the fixed axes or any other external reference. Instruments within the moving axes can measure target range and angular velocity of the gun platform and the rates of change of each of these. (Angular velocity of the gun platform and the target range are the two primary or basic inputs to fixed gunnery sighting systems.) Such measurements are made solely within the moving axes and with reference to them, and are in no way dependent upon the attitude of the aircraft or position in the fixed system. This point is vital to the understanding of the generation of the prediction angle.

Corrections for Trajectory Shift

Any gyro computing sight, properly calibrated and provided with correct range input at all times, will automatically compute in a pursuit curve the trajectory shift requirement for a given firing condition regardless of the type of aircraft in which the sight is installed. This is explained in the three examples cited in the following text.

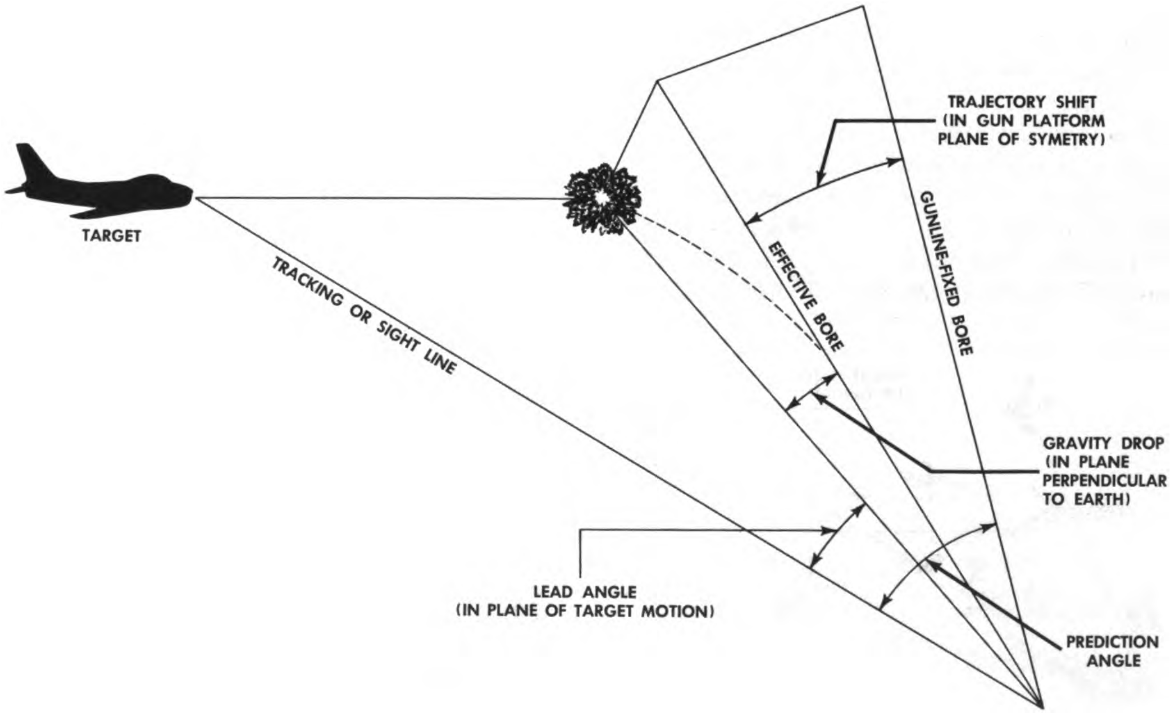

Prediction Angle

Digitized by Google

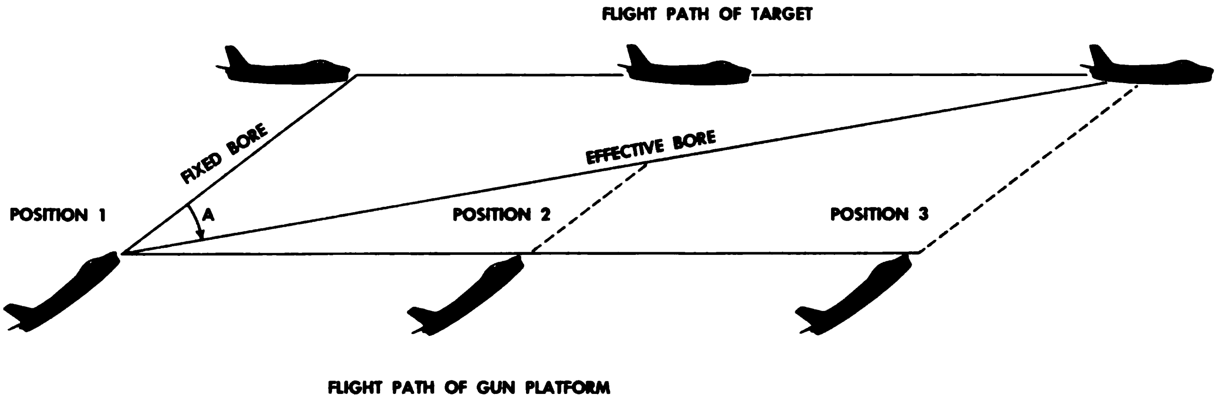

Trajectory Shift with no Correction Needed

Occurrence of trajectory shift with no requirement for correction. In the example diagrammed above, lead due to target motion and trajectory shift is not required because of the favorable motion of the target. In such a condition, both the gun platform and the target are moving with uniform velocity in a straight line. (For the purposes of this example, gravity drop and bullet retardation due to air resistance are not considered.) Position 1 of the firing and target aircraft in the diagram above describes the instant of fire. Position 2 depicts them at an intermediate position, and position 3 describes the projectile striking the target. Angle A is the trajectory shift apparent only to the observer in the fixed axes stationary relative to the ground. The observer in the moving axes does not see the projectile travel along the effective bore line. To him it travels directly out of the gun bore and flies up into the target along the fixed bore line. He would maintain that there was no need for a trajectory shift correction. The trajectory shift, therefore, must be qualified in terms of the frame of reference employed in describing it.

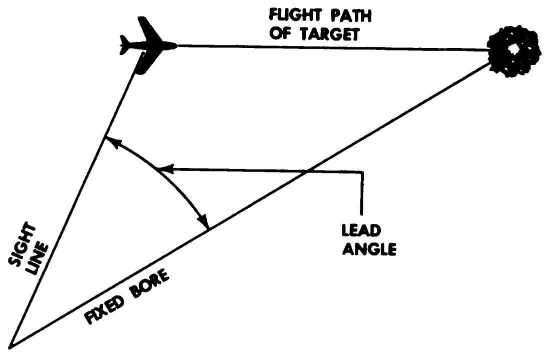

No Trajectory Shift

No occurrence of trajectory shift. In the case diagrammed at the lower left, there is a lead angle requirement because of target motion, but there is no occurrence of trajectory shift since the fixed bore line or the gun bore axis points directly into the relative wind or parallel to the flight path. The gun platform must turn only because of the tracking requirement inherent in any pursuit curve.

Trajectory shift corrected for by the sight. In the third example, shown on the next page, trajectory shift becomes a factor. There is, however, no lead requirement because the target shown at the lower right of the diagram, is stationary. The fighter pilot establishes a dive angle into the ground target, but his gun bore is initially above the line of sight to the target. In order to bring his guns to bear upon the target, the pilot depresses the nose of the aircraft and begins the tracking process. In this particular case, the sight has the proper range input at all times during the tracking process. The pilot will be required to fly a curved path into the target. When he flies this curved path into the target an angular velocity input is fed into the sight as an angular rate input directly proportional to his turning rate in the vertical

Digitized by Google

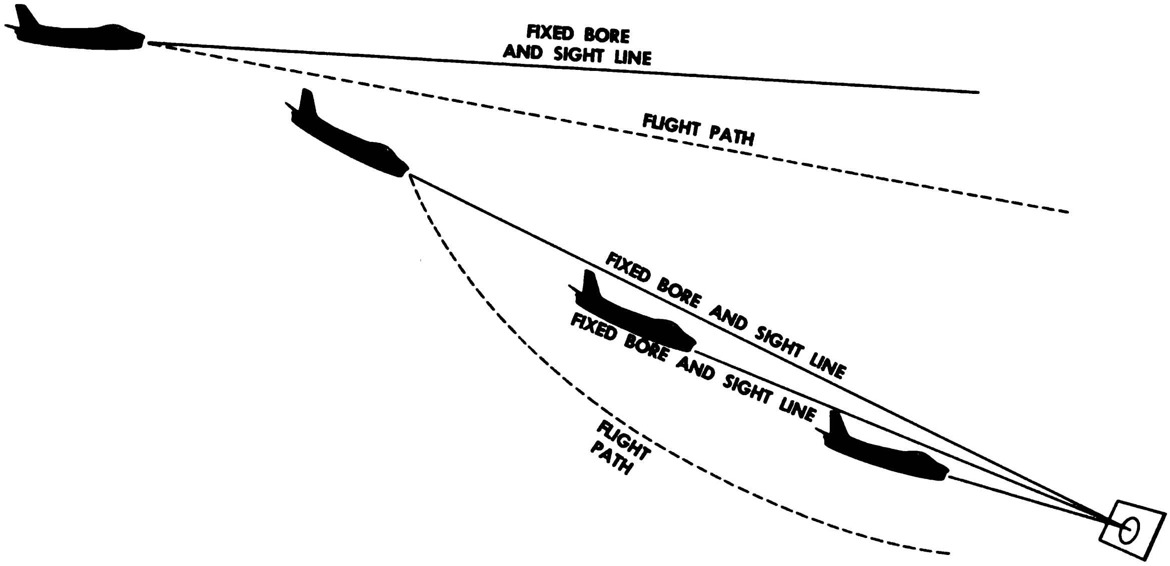

Trajectory Shift Corrected for By the Sight

plane. Providing the sight has proper range input and the calibration is accurate there is no need to compensate for trajectory shift.

Situation in actual practice. In actual practice, the situation that a pilot encounters in aerial gunnery is a combination of the second and third examples cited above. There is no need for a harmonization correction for trajectory shift, because the trajectory shift is automatically computed for by the gyro sight, provided it has the proper range input and is calibrated correctly.

Correction Methods in F-86 Type Aircraft

So long as it has the proper range input at all times and the sight calibration is accurate, the gyro sight will compute trajectory shift. However, if the sight must be caged manually, or if the range input and/or calibration are inaccurate, the trajectory shift will not be automatically compensated for. This situation occurs in low angle strafing. For example, in the F-86, the guns are not parallel to flight path at the time they are fired in the low angle strafing pass. This means that trajectory shift occurs in a measurable quantity. The sight is in a condition which prevents compensation for this trajectory shift in flight. It must, therefore, be corrected for on the ground prior to the flight. Otherwise, projectiles fired when the sight is on the target will strike beyond the target as shown in the illustration below. In this case, the aircraft has the fixed bore and sight lines parallel. Both lines are depressed 5° below the flight path of the aircraft. If the pilot attempts to fire with his sight on the target, the pro-

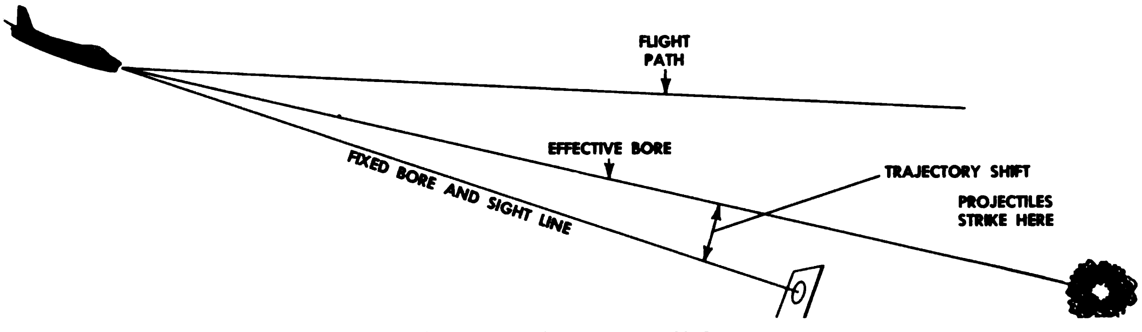

Uncorrected Trajectory Shift

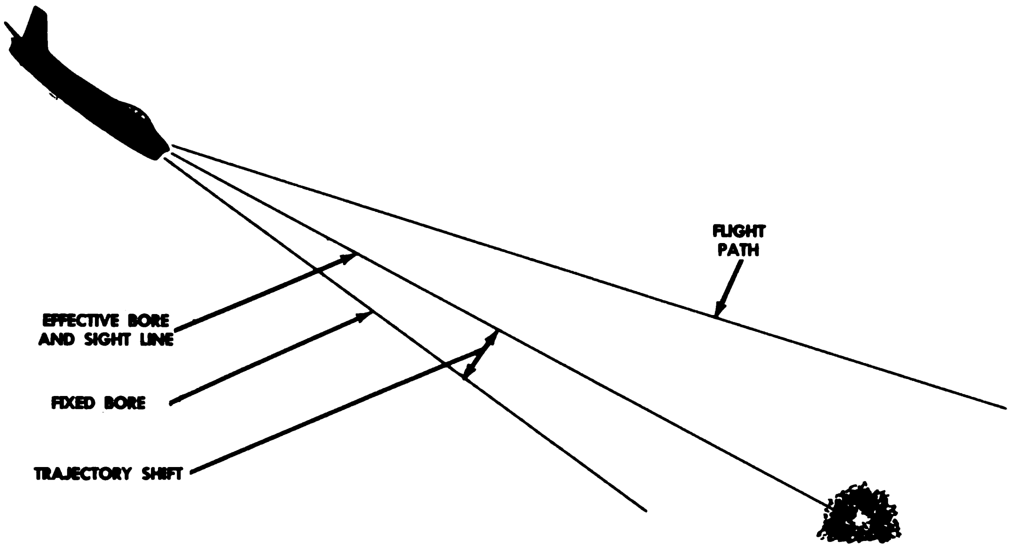

Corrected Trajectory Shift

jectiles will likely fly over the target because of the trajectory shift.

In the *Nellis method of harmonization*, the sight line is depressed prior to flight so that it rests upon the effective bore line of the guns. This causes the pilot to fire earlier and the projectiles strike the target, as illustrated in the diagram above.

Another method of harmonization, the *North American System*, is a type of harmonization in which the sight line and fixed bore of the guns are essentially parallel. In actual fact, the sight line is depressed a slight amount to correct for the linear distance or parallax between the sight line and mean gun bore line in the F-86 type of aircraft. This is an accurate, valid system of harmonization and, for air-to-air gunnery, is theoretically superior to the Nellis method.

Theoretical gunsight errors, dispersion, random equipment errors, and ranging and tracking inaccuracies on the part of the pilot affect both the Nellis and North American systems of harmonization.

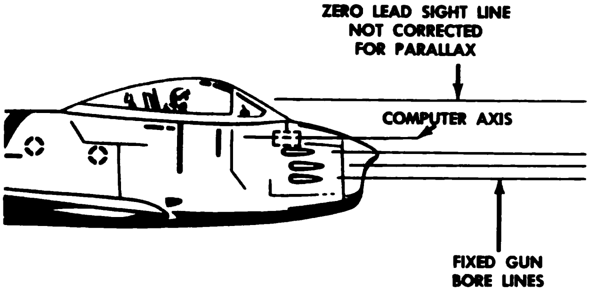

A-Series Sight Harmonization

MECHANICS OF HARMONIZATION

In order for a lead-computing sight to give correct prediction angles it must base its calculations on the proper starting point, or zero-lead sight line. The purpose of any method of harmonization is to set up this zero-lead sight line so that the sight pip will always indicate to the pilot the correct path to fly for a hit.

The A-1 and A-4 sights compute the proper lead angles, within their calibration error, to account for the effects of gravity drop, trajectory shift, and the movement of the target aircraft during the time of flight of the bullets.

With the exception of the small correction for parallax, the fundamental harmonization for these sights exists when the gun bore line, the zero lead sightline, and the computer axis are mutually parallel as shown in the illustration at the left. This is true for any gun angle and is independent of angle of attack.

Digitized by Google

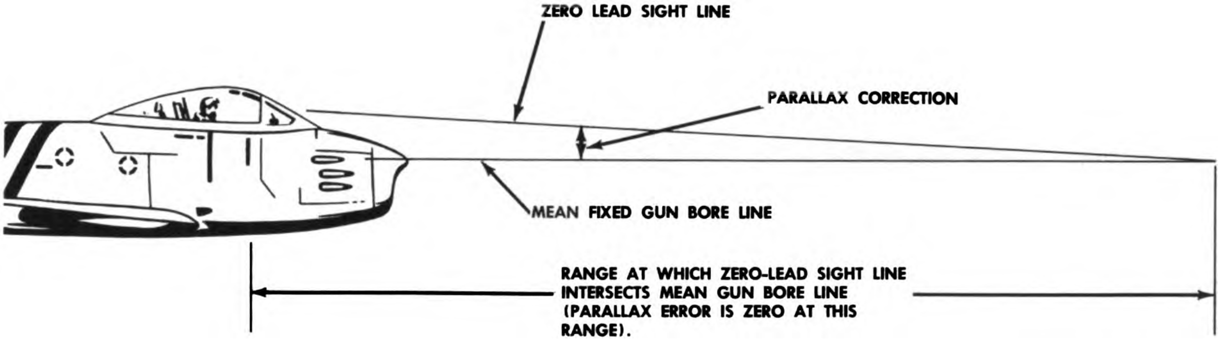

Parallax Correction

Correction for Parallax

Since the sight already computes for the effects of gravity drop, velocity jump (or trajectory shift), and target motion, the only correction that could be accounted for in harmonization is parallax. This arises because the sight head is mounted in the aircraft above the middle guns, so that without a correction the sight is always aiming above the mean gun line. Although this error is small, it is general practice to correct partially for it in the harmonization process. This can be done either by tilting the guns up to intersect the sight line or by tilting the sight line down to intersect the guns. In either case the intersection of the gun bore line and the zero-lead sight line should occur at the range at which it is desired to have no parallax error. Since the guns on some aircraft are fixed except for a very small amount of gun adjustment, parallax correction is more conveniently made by tilting the sight line down, as shown in the illustration above.

As can be seen in the illustration, the parallax error is zero at the range where intersection occurs, and is small for all other ranges.

Air Force specifications call for intersection of the zero-lead sight line and the mean gun line at a range of 2,250 feet. Other ranges, however, may be used. The parallax correction is not critical in aircraft where the guns and sight are relatively close together. The larger the vertical distance between guns and sight the more important it is to correct for parallax.

Computer Angle

The attitude of the sight computer (within reasonable angles) has very little effect on the computation of the elevation component of the prediction angle, but it does effect the cross-roll correction, which helps keep the pip on the target if the aircraft rolls while tracking. Cross-roll correction can be accomplished by tilting the computer case. This changes the deflection gyro mounting axis relative to the gun bore line and sight line. The correct mounting of this gyro, relative to the gun bore line, is obtained when the computer case is parallel to the gun bore line. On the F-86A, E, and F models, the guns are parallel to the fuselage reference line, and the computer can be made parallel to the guns by leveling it when the aircraft is level.

This procedure differs somewhat from the standard Air Force method in which the sight line is leveled to some flight attitude, the computer is placed parallel to the sight line, and the guns are pointed to intersect the sight line at 2,250 feet range. The two methods are compatible in that they both produce essentially the same orientation between the guns, sight line, and computer. There is a small difference in computer attitude between the two methods, this being the parallax correction angle which is very small and well within the computer leveling tolerance.

Firing-In Distance

Usually the selection of a distance from the target to the aircraft for firing-in is already determined by the nature of available facilities. Either the range is already built to certain specifications, or the space available for building a range is limited.

If, however, the distance has not been previously decided upon, several factors should be considered in its selection. The size of the target required increases as the firing-in distance increases, both because of the larger bullet gravity drop and the larger bullet dispersion pattern. For example, if 75% of the bullets fall in a 4-foot circle at 1,000 feet, an 8-foot circle will be needed at 2,000 feet. Since it is desirable to spot all shots — even those outside the target — this means the actual target should be at least twice as big as the bullet dispersion circle. The result is that if a very long distance is used the target is large and unwieldy. On the other hand, if a relatively short distance is used, the smaller target is easier to build and easier to adjust when lining it up with the aircraft.

As far as accuracy is concerned, it is doubtful if anything is gained by firing-in at extremely long distances. At very close ranges it is more difficult to determine the correct gun position, but only because more precision is required in locating hits. If distances of the order of 500 to 1,000 feet are used, adequate accuracy is obtained without the necessity for precision.

The most commonly used distance is 1,000 feet which has proved to be quite satisfactory and also convenient for calculation since 1 mil will subtend 1 foot on the target.

Readying the Aircraft for Firing-In

The following is a general checklist of steps to be followed when readying an aircraft for firing-in.

1. Tow or taxi aircraft into approximate alinement with center of firing-in butt. If possible, park aircraft at the same distance from the target as the actual range for which the guns are to be harmonized.

2. Mount target on a target frame and swing into butt.

3. Attach plumb bobs from suspension points located on underside of fuselage. *The lines should be attached so that the strings are directly in front or to the rear of the screwheads,* since letting the lines hang from the sides of the screwheads will give an erroneous reference on the target. On a windy day, suspend plumb bobs in cans filled with oil to steady them. On some types of aircraft, a peepsight assembly must be attached to points provided on the side of fuselage.

4. Place tripod jacks at designated points under wings and nose of aircraft. The jacks should be set so that there is no interference with any part of the aircraft and so that one leg of the tripod faces to the rear of the aircraft to prevent the jacks from rocking backward when the guns are fired.

5. Jack up aircraft, level it laterally, and move target into alinement by use of the plumb bobs. Some types of aircraft must position relative to the target by superimposing the peepsight on its target reference point.

6. Using a gunner's quadrant as a reference, position longitudinally to the correct attitude for flight at the desired harmonization speed.

7. Use A-2-A sight line level indicator to level sight line. When using this indicator, adjust the sight pipper in elevation to CENTER in the indicator.

8. Raise or lower the nose jack until sight pipper rests on appropriate point on harmonization target, with the sight in the electrical caged position. (A-1 and A-4 sights.)

9. Boresight guns and fire them into firing-in bull. When firing-in, a 10-round burst is normally used.

10. Boresight gun camera to allow gunnery and bombing sight pipper coverage. Center camera laterally.

Technical orders for each type of aircraft give more specific information on harmonization procedures for that particular aircraft.

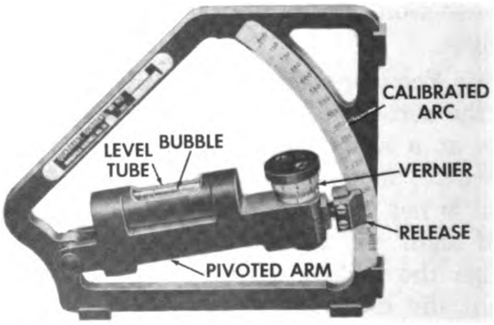

Gunners Quadrant

HARMONIZATION EQUIPMENT

Sight, guns, and gun camera on a fighter aircraft are harmonized with special tools. These tools include the gunner's quadrant, the sight line indicator and the boresighting tool. Each of these special tools is a precision instrument capable of making very accurate measurements.

Gunner's Quadrant

Among other uses, the gunner's quadrant, illustrated on the preceding page, serves to set the fuselage reference line at the angle of attack required by the harmonization conditions. A vernier on the quadrant scale makes it possible to read angles to tenths of a mil.

When using the gunner's quadrant for this purpose, press the release on the level bar, move the bar up or down on the calibrated arc until the pivoted arm is set at the desired angle of attack, and set the vernier to zero. Place the gunner's quadrant on the fuselage reference line leveling lugs. Note the position of the bubble in the spirit level. Adjust the jack under the nose of the aircraft until the bubble is exactly centered between the centering marks on the outside of the glass tube.

A-2A Sight Line Level Indicator

The A-2A sight line level indicator, shown above is used to level the caged sight line of the A-1, and A-4 gun-bomb-rocket sights and sights of the K-14 series.

A-2 Sight Line Level Indicator

This instrument consists of a spirit level mounted on a telescope. A prism in the telescope barrel reflects the spirit level tube, so that a person looking into the telescope barrel sees both the spirit level tube and the view through the end of the telescope, as shown in the illustration at the left below. The index mark on the spirit level tube acts both as a centering mark for the bubble and as a cross hair.

To level the sight line when using the A-2A sight line level indicator, mount the instrument on the reflector or elesehwere, depending on the type of aircraft. With the sight in operation, look into the eyepiece of the telescope and tilt the telescope by turning the adjusting knob until the spirit level bubble is centered on the index, as illustrated at the center below. The sight line level indicator is not level. The next step, then, is to level the sight line. Using the leveled index mark of the indicator as a cross hair, adjust the sight head mounting, or make other available adjustment, until the tracking index of the reticle image is in line with the index mark of the indicator.

If the sight line level indicator is disturbed when the sight head adjustments are made, the indicator must be leveled again and the sight head readjusted. The sight line is level when the view through the eyepiece is similar to that in the illustration below.

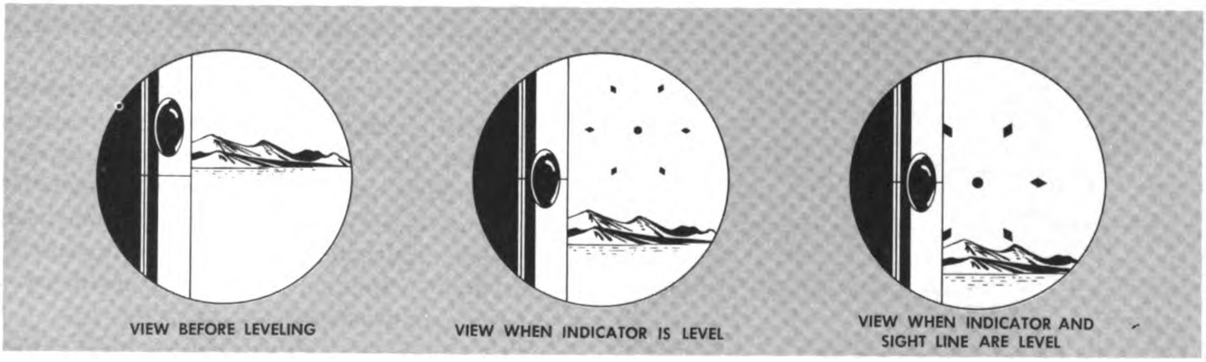

View through Eyepiece of A-2A Sight Line Level Indicator

Digitized by Google

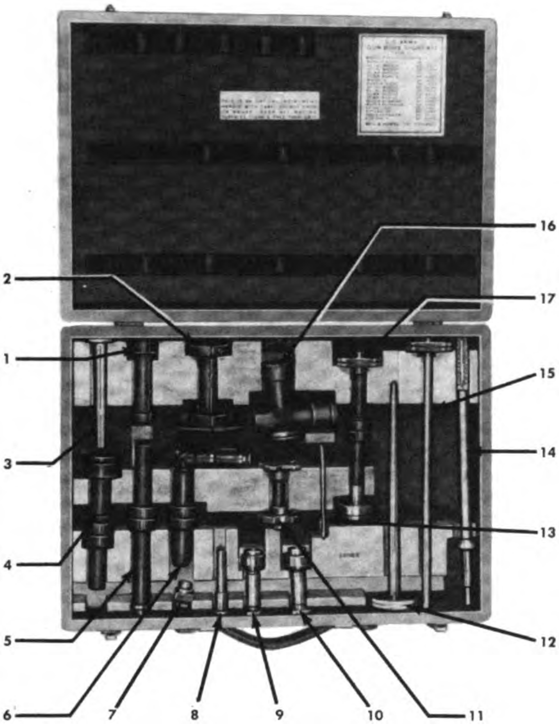

1. .20-MM MUZZLE ADAPTER
2. .37-MM MUZZLE ADAPTER
3. .50-CAL MUZZLE ADAPTER
4. EYE PIECE
5. STRAIGHT EXTENSION
6. ANGLE EXTENSION
7. BREECH SIGHT
8. .30-CAL BREECH ADAPTER
9. .50-CAL BREECH ADAPTER
10. .20-MM BREECH ADAPTER
11. .37-MM BREECH ADAPTER
12. MUZZLE EXPANDER
13. WRENCH
14. EXTRACTOR
15. .30-CAL MUZZLE ADAPTER
16. MUZZLE SIGHT
17. MUZZLE EXTENSION

Boresighting Kit J-1 — Components for Muzzle and Breech Tools

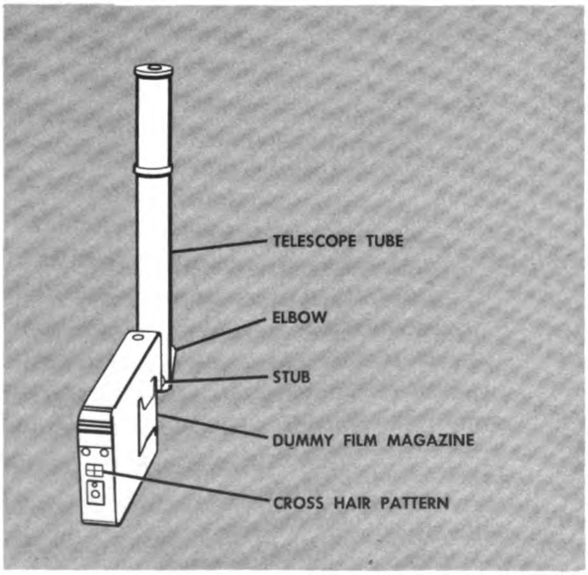

Assembled AN-1 Gun Camera Alining Indicator

Boresighting Tool

The boresighting tools used to establish the direction of the gun line consists of a sight unit and an adapter. The sight unit incorporates a telescope and nonmagnifying lens system. The adapter is a precision unit, made to fit exactly into the muzzle or breech of a gun.

To make it possible to boresight many types of guns under a variety of conditions, two boresighting kits are available. Boresighting kit, J-1, shown at left, contains components that can be used to assemble both a muzzle and a breech tool. Boresighting kit, J-2, is similar to the J-1, except that it contains only the components to assemble the muzzle tool. Whenever possible, the breech tool should be used to boresight the guns, because it locates the gun lines with greater accuracy.

GUN CAMERA HARMONIZATION

Gun cameras installed in fighter aircraft must be harmonized if a large deflection allowance on high speed targets is to be recorded. Which of two possible procedures to use to accomplish this harmonization depends upon the location of the camera in the aircraft — whether it is mounted in the wings or nose, or is located elsewhere and photographs the image in the reticle by means of reflector plates.

Harmonization of Wing or Nose Camera

Aline the camera by use of the AN-1 gun camera alining indicator. This device shown in the illustration at left, is shaped like a film magazine and has a viewing telescope at the rear. When inserted into the camera in place of the magazine, cross hairs in the boresight tool indicate the camera's aiming point.

Aline this aiming point with the gun sight in the same manner as alining guns. The camera shutter must be opened by turning the speed change knob or by momentarily operating the camera. Adjustments provided in the camera mount for azimuth and elevation adjustments may consist of a universal joint, a screw adjustment, and slotted holes. To aline some cameras, it may be necessary to use shims or washers.

The intersection of imaginary lines joining the fiducial marks appearing in the projected picture indicates the center of the picture. This center point is not always used as the aiming point. As shown in the illustration at right, a point in the center of the upper half of the frame is more desirable, since the target usually is in the lower part of the frame. In this way, the picture can show more lead and still have the entire target in the frame.

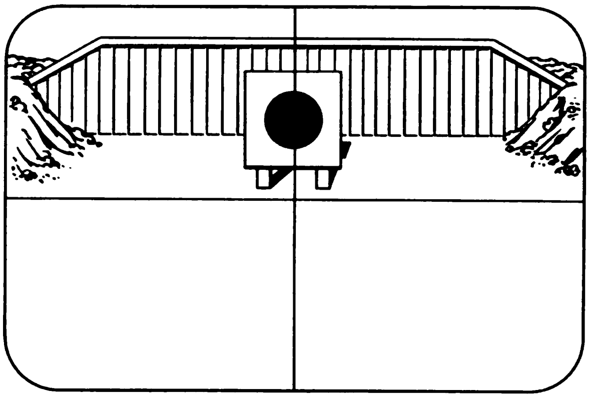

View through AN-1 Gun Camera Alining Indicator

Harmonization Using A Camera Reflector Plate

If the camera is mounted so that it requires a camera reflector plate to photograph the pipper and reticle, it is imperative that the pipper which the pilot sees and the pipper which the camera photographs be superimposed. This will require adjustment of the camera reflector plate so that it is absolutely parallel with the sight reflector plate. Shims and washers may be necessary with some installations to accomplish this adjustment. When the adjustment of the camera reflector glass is correct, both pippers, as seen through their respective reflector glasses, should be superimposed upon the same object. If this adjustment is made so that the pipper shown on the camera reflector plate is superimposed upon the target bull when normal 1,000 foot harmonization is being accomplished, and a sighter burst is taken at infinity, there will be a ½-mil parallax error between the pilot's line of sight and the camera's line of sight. However, as most gunfiring is conducted at ranges near 1,000 feet and the pippers were superimposed upon the same object at 1,000 feet, there should be no error in line of flight or lead when the film taken during the firing pass is projected on the screen.

If the A-1C or the A-4 sights are to be used in air-to-ground camera gunnery, the camera must be harmonized so that it photographs the sight reticle at 0° deflection and at the maximum deflection of 10°. This will enable the camera to photograph the sight reticle pattern and the target, simultaneously, and make it possible to analyze the pilot's aiming technique and accuracy.

ROCKET HARMONIZATION

The harmonization of a fighter aircraft for rocket firing is very similar to the harmonization of the aircraft for machine gun firing. Actually, rocket harmonization is easier because once it is done, it is usually fixed. Unfortunately, the factors that affect a bullet in flight also affect the rocket — and to a greater degree.

The aircraft manufacturer provides specific figures concerning the orientation of the launcher rails in reference to the fuselage reference line of the aircraft. Appendix VII gives rocket rail alinement data for specific aircraft. Actually there is no need to harmonize the launcher rails on the aircraft except to make sure that they are all level with respect to one another at the specific value either above or below the fuselage reference line.

For example, the rocket rails on the F-86A, E, and F should be alined 17.7 mils below the fuselage reference line, as specified by the aircraft manufacturer. The easiest way to accomplish this is to jack the aircraft up to a 17.7-mil nose-high attitude by use of the gunner's quadrant on the longitudinal leveling lugs. Then level each rocket rail individually which would position it 17.7-mils below the fuselage reference line. All rocket rails should be alined so that the rockets fire forward in a line parallel to the center of the aircraft. They should not be toed in so that the flight paths of all rockets cross at some range as do the paths of machine gun bullets. However, the individual rails on one side of the aircraft can be alined on one point at a range of 1,000 feet without causing any appreciable deviation in the flight paths.

Digitized by Google

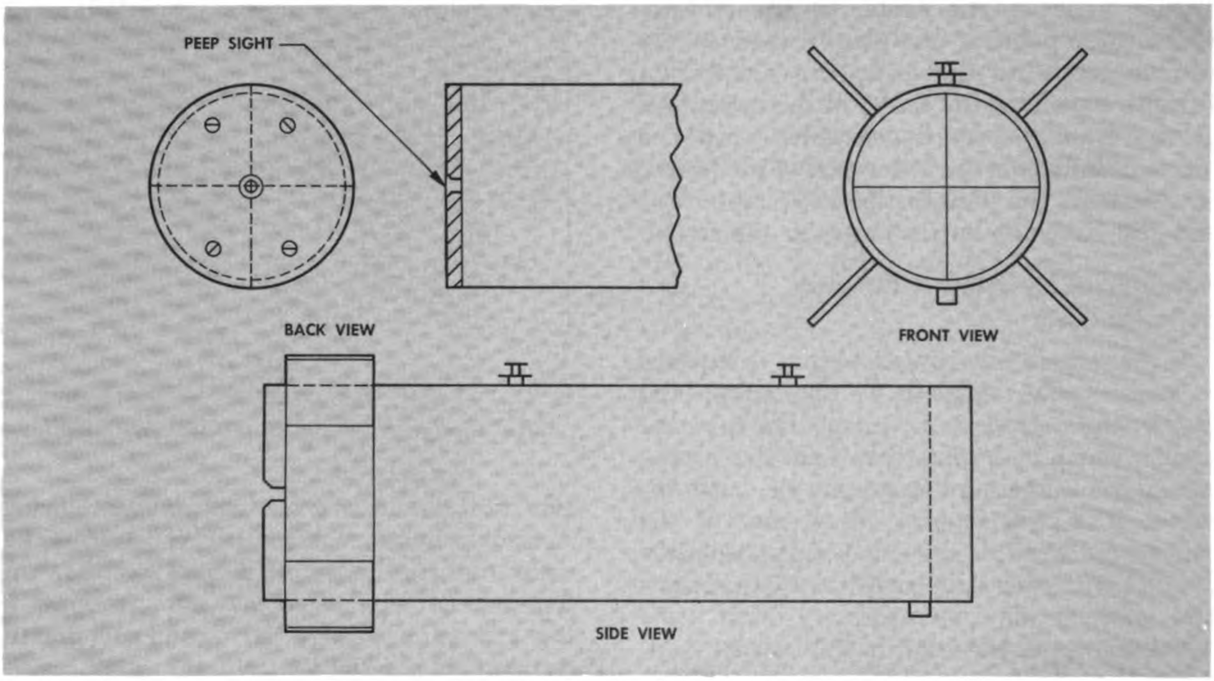

2.25 Inch Rocket Visual Boresight Tube

In the illustration above, plans are given for a visual boresight tube that can be constructed from a 2.25-inch SCAR rocket tube with the propellant and head removed. This tube is mounted on the rail and by sighting through the tube the rocket rail can be alined laterally at the same time the aircraft's guns are being harmonized.

The illustration below shows the sight picture obtained when properly sighting through the boresight tube on a harmonization target which is at a range of 1,000 feet.

For simplicity in determining the sight depressions necessary for various rocket firing conditions, the usual method is to aline the zero prediction sight line so that it is parallel to the launcher line. However, this may vary for different types of aircraft. The alinement of the sight line in reference to the launcher line may also vary, depending upon the accuracy of existing rocket trajectory tables.

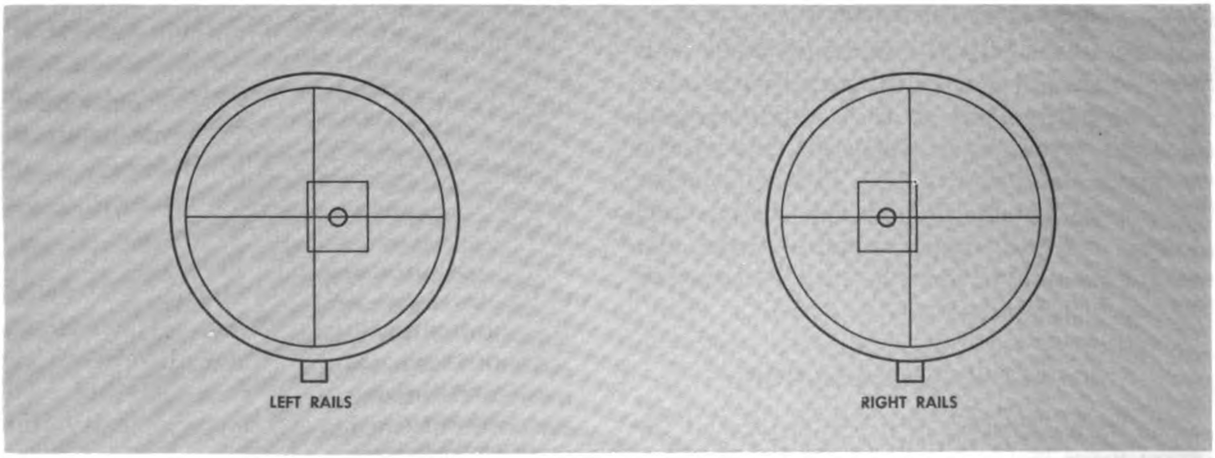

Desired Sight Picture

Digitized by Google

CHAPTER 5

recording and assessing devices

It is difficult for a fighter pilot to prepare for actual combat by firing bullets at practice targets alone. Targets that can be used for aerial gunnery practice do not simulate combat targets either in shape, design, speed or maneuverability. There can be little practice of tactics against a towed target.

The problem of the need for realistic practice under conditions as much like combat as possible can be solved by use of the gun camera. This is a motion picture camera used to record results in fighter gunnery, rocketry, and bombing. It may be installed in the fighter's nose or wing. Another possible location is directly behind the reflector glass of the gun sight. A camera so installed is called a gun sight aiming point camera (GSAP) and records the scene viewed by the pilot during the actual firing period. The gun camera may be used alone or in conjunction with guns, rockets, or bombs.

Camera exercises are the fighter pilot's scrimmage practice. Combat conditions can be more nearly simulated by camera firing than by any other method. Range estimation, line of flight, and deflection allowance are the foundation of all gunnery training and should be learned thoroughly.

At present, airspace where it is safe and permissible to fire live ammunition is fairly limited. It is not expected that this situation will be appreciably alleviated in the near future. To the contrary, as airspeeds of aircraft increase, larger ranges will be required for air-to-air and air-to-ground gunnery, rocket firing, and bombing. The fighter pilot, therefore, will be forced to rely more and more upon the camera for his training.

During air-to-air gunnery with banner, winged, or remote controlled targets, the gun camera provides the pilot with a method of determining and correcting errors in firing range, angle off, alinement, and deflection.

For air-to-ground gunnery, bombing, or rocketry, slant range and dive angle may be detected by use of the camera. As in air-to-air firing, the GSAP camera aids in eliminating aiming errors.

During combat, either aerial or ground attack, the gun camera often provides the only method of recording the destruction inflicted by the fighter.

In the first part of this chapter, the AN-N6 and N-9 gun day cameras are described. Technical data are given and principles of operation are explained for both types of camera.

Film exposed in a gun camera and later developed is projected, for interpretation, by the D-1B motion picture projector, which is

Digitized by Google

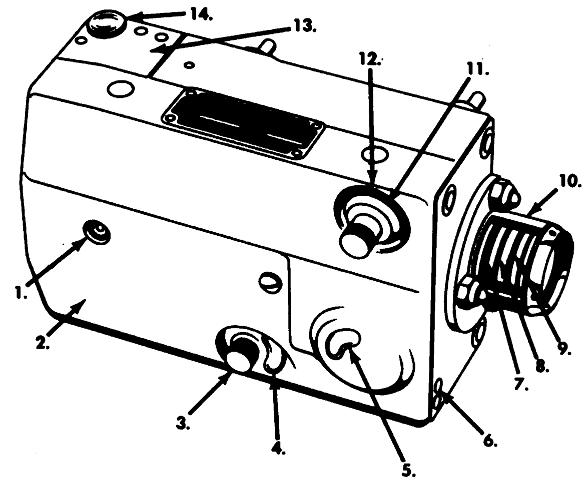

1. TOP COVER SECURING SCREW
2. TOP COVER
3. FOOTAGE INDICATOR KNOB
4. FOOTAGE INDICATOR
5. OVERRUN INDICATOR
6. FILM HEATER SOCKET
7. INDEX RING
8. LENS ASSEMBLY
9. DIAPHRAGM RING
10. LENS HOUSING
11. SHUTTER SPEED KNOB
12. INDEX MARK
13. MAGAZINE ACCESS COVER
14. DOOR LOCK KNOB

AN-N6 Camera

described next. The operating procedure for this projector is also explained.

Through proper interpretation or assessment of the film, methods of attack and vulnerable points of enemy aircraft can be determined. Gun camera film, when properly assessed, make errors in pilot technique readily apparent. Proper assessment, therefore, is invaluable to the fighter pilot striving to become expert in all phases of fighter weapons delivery. The final sections of this chapter deal with the equipment and techniques of film assessment.

AN-N6 GUN CAMERA

The AN-N6 gun camera, shown in the illustration on the next page, is an electrically operated motion picture camera, designed to record results obtained in aerial and ground gunnery training and for producing visual records of aerial combat.

The gun camera body contains the shutter, the motor, the overrun control mechanism, the film drive mechanism, and a reset film footage indicator. In addition, a lens assembly, including a removable photographic filter, is mounted on the front of the camera housing. This assembly is shown at the right of the illustration to the left.

The motor is a complete 24-volt DC (direct current) unit with a shaft speed of approximately 11,000 rpm. It can operate on a 28-volt current, or at a maximum of 28.8 volts.

The Type A-6 film magazine is interchangeable in all AN-N6 and N-6 cameras. It contains 50 feet of 16-mm film which records the result of each firing pass.

To prevent damage to any portion of the camera mechanism in the event of a film jam, a protective spring clutch is incorporated between the motor and the change gear drive assembly. A protective motor cutout is also included in the motor circuit to cut off the power in the event of a jam or an unusually heavy load.

Principles of Operation

The camera is operated through the firing circuit of the aircraft as well as through an independent camera circuit. Whether the armament switch is in GUNS AND SIGHT or CAMERA AND SIGHT, the camera operates whenever the trigger control switch is depressed. When the rocket switch is in ROCKET AUTO or ROCKET SINGLE and the bomb-rocket button on the stick is depressed, the camera will operate as long as the button is held down, plus the overrun setting. When properly installed and harmonized, the AN-N6 gun camera records all phases of action during the burst of gun fire at all points where the fire converges.

A system of speed change gears, contained within the camera body and controlled by a shutter speed knob on the top cover, permits a selection of the different shutter speeds. Each time the trigger control switch on the gun firing circuit is depressed, the motor in the camera body begins to operate the camera mechanism. At the same time the solenoid is energized causing the overrun indicator to be withdrawn from the picture aperture for the duration of the time that the trigger control switch remains depressed. When the trigger control switch is released, the solenoid is instantly deenergized, causing the camera to continue operating by means of an integral overrun control.

Overrun Control Operation

An overrun control, which is an integral part of the camera body, automatically keeps the camera operating for a period of time after the trigger control has been released. At the same time, it causes the portion of the film exposed during the period of overrun to be marked for identification thus enabling a pilot to determine his close fire range when firing at aerial or ground targets.

The overrun mechanism automatically causes the AN-N6 camera to run a predetermined number of seconds after the gun trigger switch has been released. The time of the overrun can be varied from 0 to 5 seconds, in increments of 1 second. The most usual setting is for 2 seconds of overrun. A small indicator, resembling a pin, is actuated by a solenoid and released into the picture allowing those portions of the film to be readily identified during assessing.

Shutter Operation

A rotary-type shutter is mounted in front of the camera housing and has selective speeds of 16, 32, and 64 frames per second. The shutter speed may be varied by means of shutter speed knob.

The shutter shaft is geared to the film claw mechanism which pulls the film past the aperture opening by means of the perforations along one side of the film. The film is rewound on a takeup core in the film magazine. The takeup core is operated by the film drive spline when the film magazine is properly seated and the drive spline is properly engaged by the magazine latch.

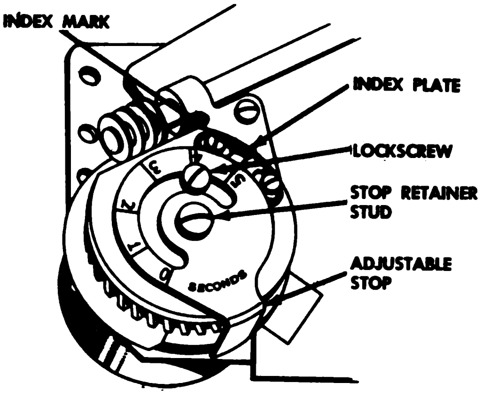

Overrun Control Adjustment

Film Footage Indicator

The footage indicator can be set by depressing and turning the reset knob to the desired indication. The indicator should be set to the same footage as that indicated in the film pack window of the film magazine.

Lens Assembly and Operation

The complete lens assembly consists of a prefocused 35-mm f 3.5 plain lens contained within the lens housing. The lens assembly is equipped with a Wratten No. 12 yellow (minus blue) glass filter, which is removable and interchangeable.

The minus blue filter cuts through haze, darkens the sky, and protects the lens from dirt and oil. It does not make an aerial target clearer in the picture, since there is relatively little haze between the pilot and the target. However, it does make the background clearer. Replacing this filter with clear optical glass builds up the effect of the background haze and makes the target stand out more distinctly.

The lens unit includes the two marker rings shown in the illustration below. One ring is marked with the numbers 16, 32, and 64 which correspond to the camera speeds of 16, 32, and 64 frames per second. The lower ring is used to adjust the size of the lens diaphragm stops (f openings) which are marked f 3.5, f 4.0, f 5.6, f 8, f 11, and f 16. To simplify the setting of the correct f-stop, the diaphragm marker ring is also marked with the letters B, H and D, which stand for *bright*, *hazy*, and *dull*, respectively.

To make a correct lens setting, set the marker ring with the camera speed of 16, 32,

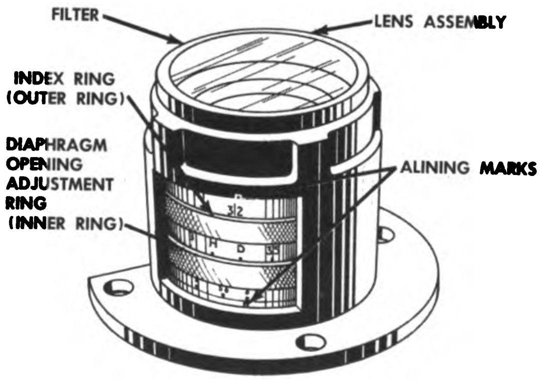

Lens Assembly

Digitized by Google

or 64 frames per second. It is important that the index ring on the lens and the shutter speed knob on the camera body always are set at the same shutter speeds, as an error results if the camera is set at one speed and the lens at another. The second step consists of setting the diaphragm ring at B, H, or D, depending on the lighting condition and exposure desired.

LENS SETTING AND SPEEDS. The following diaphragm openings correspond to the light classification of the different shutter speeds on the 35-mm f 3.5 lens.

Frames Per Second	*Corresponding f number*		
	Bright	*Hazy*	*Dull*
64	f 8	f 5.6	f 4.0
32	f 11	f 8	f 5.6
16	f 16	f 11	f 8

Installation

The camera body is usually installed in the aircraft at the factory. Even if the camera is not installed, the mounts and wiring for the gun camera will have been installed before the aircraft left the factory. Any repositioning of camera necessitates rewiring of the aircraft and the installation of a cannon plug at the new location.

In all cases where the mounting of the camera places it in such a position that the optical axis of its lens is at a right angle to the sight line of the gun sight, use the erector assembly in order to line up the lens with the sight. This erector consists of a 90° prism contained within a prism housing. It is interchangeable on all complete 35-mm. f 3.5 plain lens assemblies. In these cases, attach the erector assembly and secure it in the desired position as outlined in TO 10A1221.

If practicable, install the gun camera in the cockpit of the aircraft for such an installation has certain advantages. The pipper and reticle will be included in photographs taken from a cockpit-mounted camera, if it is properly harmonized. In addition, there is less likelihood of damage to the lens and filters. Because of their accessibility, such cameras may be reloaded during flight.

Loading Instructions

Press the door lock knobs forward toward the camera body.

Open the magazine access door.

Push the magazine access cover toward the camera mount.

Move the magazine latch out of the way to allow the magazine loading. This retracts the magazine driving spline from the magazine chamber.

Insert the magazine, as shown in the illustration below, all the way into the magazine chamber with its aperture toward the lens and its footage indicator toward the mount side of the camera. Move the magazine latch over the end of the magazine as far as it will go. This engages the magazine drive spline with the magazine.

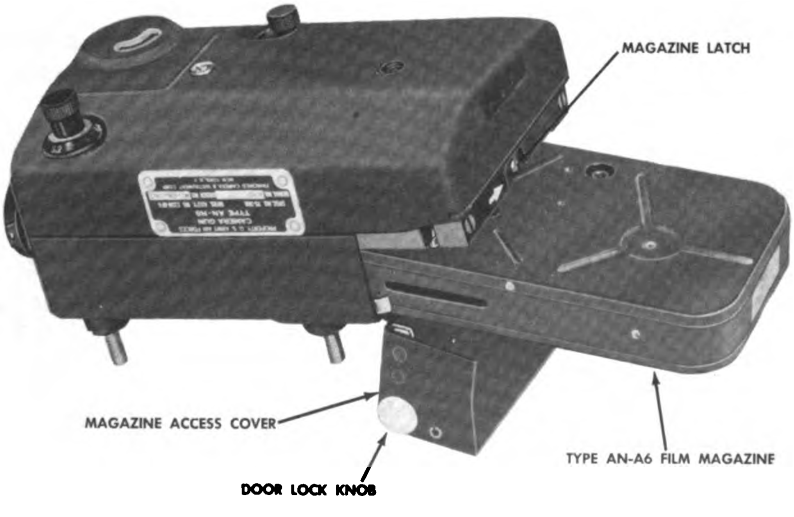

Loading AN-N6 Camera

Digitized by Google

Close the magazine access cover without forcing. The cover will not close completely unless the driving spline is properly engaged with the magazine.

Precautions

To insure the most efficient operation of the AN-N6 camera, observe the following precautions.

Do not run the camera unless the door is securely closed.

When loading, do not jar the camera out of alinement.

If developed pictures indicate that the camera is out of alinement or has a bad shutter, have it repaired.

Do not change the camera speed while the camera is running because doing so strips the drive gears.

If the window frame cuts off part of the picture, shim the entire mount the proper distance.

Protect the camera and camera windows from damage. When the camera is not in use, cover it with a protective envelope or bag and cover the window with heavy paper and masking tape. Do not drag fuel hose across the camera window.

Clean the window carefully to avoid scratching. Good camera results are possible only if *all glass* through which light passes to reach the film is clean. In some installations the glass alone absorbs as much as 65% of the light. Therefore, all canopy and camera windows should be kept clean.

If vibration causes blurring, use a higher shutter speed.

If vibration of the mount loosens camera screw or nuts, tighten and shellac them in place.

If film perforations are torn, check the adjustment of the film driving claw.

Pilot's Gun Camera Check List

Camera operation: Camera should operate through firing circuit.

Exposure setting: Set for expected light conditions.

Speed: Lens diaphragm speed must correspond to camera speed.

Glass inclosures: Make sure all filters, protective glass, and aircraft canopies through which pictures are taken are free from oil, dirt, and other obstructions.

Footage indicator: If camera is accessible from the cockpit, check to see that the footage indicator corresponds with the remaining film in the magazine.

N-9 GUN DAY CAMERA

The N-9 gun camera is an electrically operated, magazine-type, 16-mm motion picture camera with an adjustable 35-mm focal length lens and filter. It is designed for use with either black and white or color film. The film magazine will accommodate a film cartridge of 50-foot capacity. The camera contains a constant speed 24-volt DC motor equipped with a thermal protective device, a variable-ratio gear train, a governor, a trip-relay, a lens diaphragm control ring, overrun control, and thermostatically controlled camera and magazine control Additional camera components include a 90° erector head mounted on the camera lens and a shutter aperture remote-control switch in the cockpit.

The camera is calibrated to operate at speeds of 16, 32, and 64 frames per second. The selection of proper camera speed is made manually before takeoff by means of speed control knob shown in the illustration on the next page. This knob controls the gear train which, through a coupling with the magazine assembly, drives the film through the camera at the selected speed. Milled flats on the speed changer index shaft positively locate the knob at each speed setting and prevent the speed from changing accidentally during operation of the camera.

CAUTION

Do not change speed setting while the camera is in operation.

To the left and above the speed control knob in the illustration is the shutter aperture control knob. This knob permits manual adjustment of the shutter aperture, or opening, by rotation of a movable shutter blade. The primary advantage of this adjustment is that it eliminates the blur or smear which might otherwise result from high-speed photography,

Digitized by Google

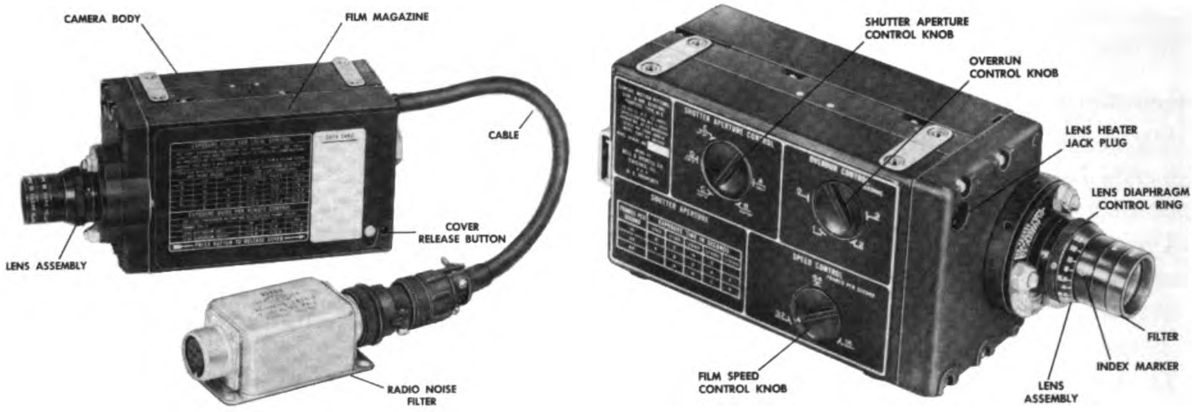

Type N9 Camera Left and Right Side Views

while retaining a range of opening sizes effective for normal and poor light conditions. The control knob must be pressed in to disengage the control knob gear from the remote control pinion, then rotated to the desired setting and released.

The shutter aperture nameplate shown below the shutter aperture control knob on the side of the camera body indicates the proper shutter aperture settings for various combinations of camera speed and exposure time per second.

Technical Data

Manufacturer	Bell & Howell
Manufacturer's design number	Design 917-A
Government model number	Type N-9
Film size	16-mm.
Film capacity	50 ft
Camera speeds	16, 32 and 64 f.p.s.
Standard lens	35-mm, f 2.8
Shutter opening	variable
Voltage requirements (DC)	24 to 29
Approximate weight, camera and magazine	3.75
Overall dimensions, camera and magazine:	
Height	$3\frac{13}{32}$ inches
Width	2.883 inches
Length (with lens and filter)	8 inches

Approximate current drain at 28 volts:

Camera motor	$1\frac{1}{2}$ amperes
Camera heater	1 ampere
Magazine heater	1 ampere
Overrun solenoid	$\frac{1}{4}$ ampere
Remote control switch	$\frac{1}{4}$ ampere

Principles of Operation

The N-9 gun camera operates when the trigger is depressed and the gun switch is in either the GUNS or the SIGHT CAMERA RADAR position. During rocket firing operations when the rocket selector switch is set to either ROCKET SINGLE or ROCKET AUTO and the bomb-rocket button on the stick is depressed, the camera will operate as long as the button is depressed, plus the overrun setting.

The camera body mechanism provides the driving power for the film magazine. The process of feeding the film past the magazine and camera exposure apertures is accomplished by the magazine mechanism and the film shuttle, or claw.

Both the camera body and film magazine are equipped with heater wires sealed against the inner face of each casting. The current required (24 to 29 volts DC) to drive the camera mechanism and energize the heater wires is brought directly into the camera body

Digitized by Google

through a short power cable. Mating contacts in the camera body and the magazine provide the connection which supplies the current to the magazine heating wire. The contacts are so designed that the magazine can be installed or removed when electrical power is on without short-circuiting the contacts through the magazine or camera body.

The film magazine contains the pressure film guide arms, and sprockets required for feeding the film past the aperture opening and for maintaining proper alinement during operation. An automatic recycling counter also is provided to indicate the length of unexposed film in the magazine. The counter will recycle back to "50" when the magazine cover release button is depressed. The film sprockets are driven by a crown gear in the camera body.

Shutter Operation

The camera shutter consists of two shutter blades, one of which can be rotated independently of the other to increase or decrease the size of the shutter opening. The shutter aperture adjustment can be made manually by means of the shutter aperture control knob, or electrically by means of the remote shutter control switch. In either case, the rotation of the rear shutter is accomplished by the same mechanical means.

In manual operation, the shutter control knob must be pressed in until its large gear disengages from the remote control pinion of the shutter control assembly, thus bypassing the control motor and its gear train.

In electrical operation, movement of the remote shutter control switch to one of its three positions (BRIGHT, HAZY or DULL) energizes the shutter control motor through the closed switch contacts for that particular position. Because the control knob gear (in its released position) is engaged by the remote control pinion, the knob and cam will be rotated by the motor through the gear train.

Speed Control Operation

Camera speed is controlled by a speed changer mechanism within the camera. Rotation of the speed control knob manipulates shifting levers which, by means of changing gear ratios, determine the speed at which the camera will operate.

Overrun Control Operation

The electrical wiring arrangement for the camera is such that pressure on the gun trigger completes the electrical circuit to the camera, which then begins to take pictures. The N-9 camera is equipped with an overrun 1, 2, or 3 seconds after the trigger button has been released.

The desired amount of overrun time is set by means of the overrun control knob. The outer rim of the control knob has been notched to match the 0, 1, 2, and 3 second overrun settings. The knob must be pressed in against the spring washer before it can be rotated. When the knob is released at the desired setting, one of the notches will engage a pin in the camera body to lock the knob in that position.

Loading and Installing the Magazine

1. Remove magazine cover by depressing cover release button and sliding cover from magazine body. The magazine assembly should then look like the picture below.

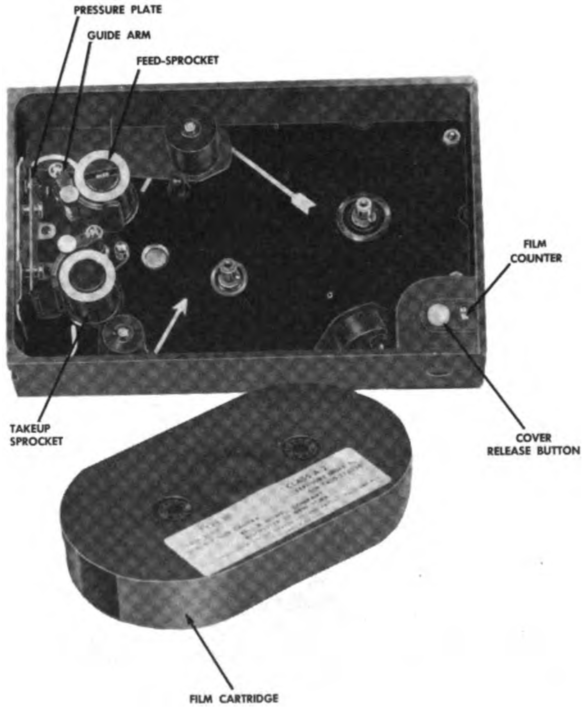

Film Magazine with Cover Removed

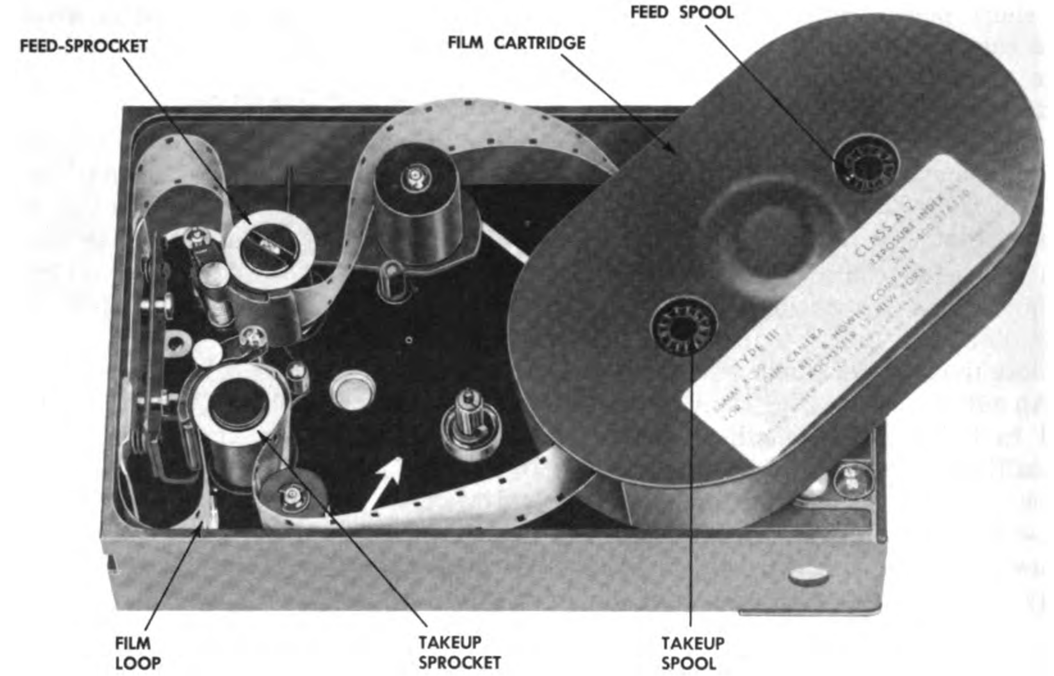

2. Open film guide arms by swinging them away from their respective sprockets.

3. Pull approximately 1 foot of film from feed spool of cartridge. Following the pattern shown in the illustration above, place cartridge diagonally across magazine and thread film around sprockets and pressure plate. Make certain that the film and pressure plate are down below the rail at front surface of magazine.

4. Close film guide arms, making certain that the sprocket teeth are properly engaged with film perforation. Place cartridge into magazine in the position shown in the illustration below.

5. Adjust the proper film loops by raising

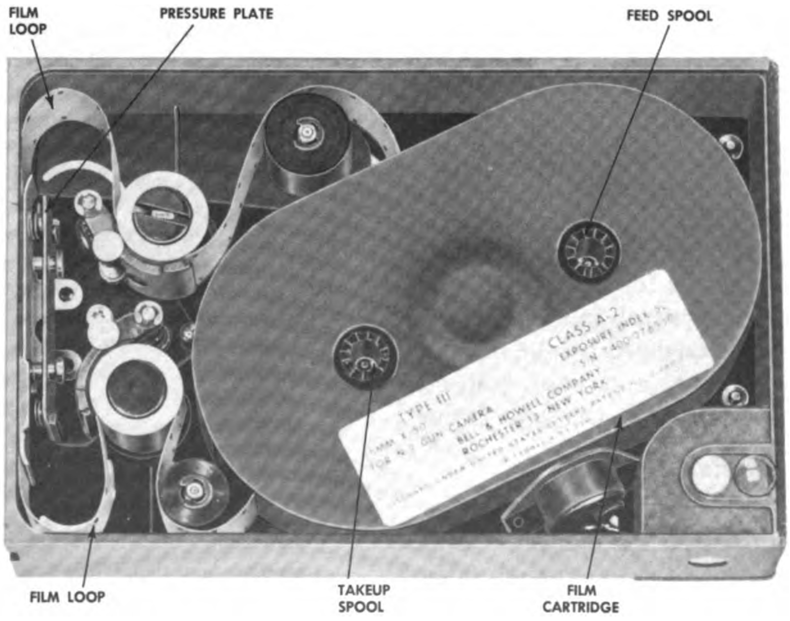

Digitized by Google

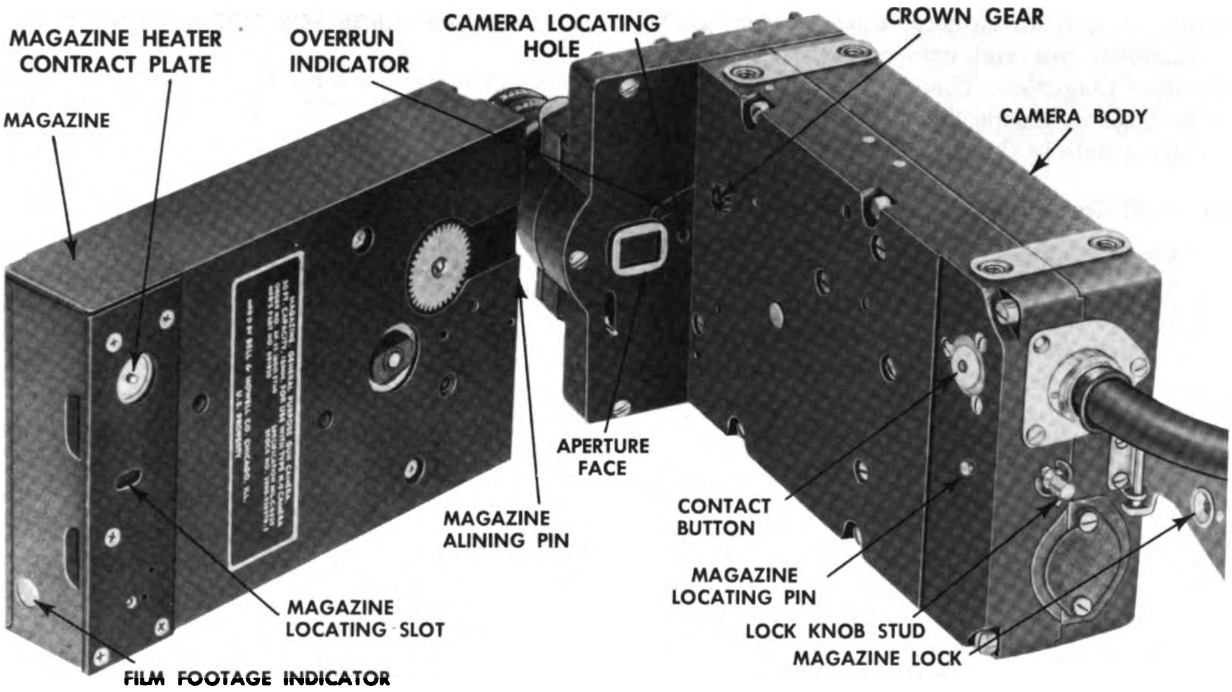

Film Magazine Separated from the Camera Body

sprockets and rotating them slightly. Be sure to seat sprockets properly after adjusting film loops.

6. Check path of film against the film path markings stenciled on bottom plate of magazine. Then draw the excess film back into cartridge feed spool, counterclockwise, and into the takeup spool, clockwise.

7. Depress cover release button, and slide the magazine cover back onto the magazine. The cover will lock in place when the release button detents into the hole in the corner of the cover.

> NOTE: Failure of the cover to close properly indicates that the sprockets have not been completely seated or that the pressure plate has been installed upside down.

8. Before installing the magazine to the camera body, carefully remove all dust and film emulsion deposits from the chrome-plated aperture face and insert magazine. Make certain that the magazine alining pin on front of the magazine is inserted into camera locating hole on right side of aperture plate, and the camera locating pin is inserted into the magazine. The pins are shown in the illustration above.

9. Then press the back end of the magazine against camera, making certain the magazine heater and disconnect pin on camera are inserted into female receptacle on the magazine.

10. Swing magazine lock into place, making certain that the claws of clamp are inserted into the two grooves on aft end of magazine and tighten knurled knob securely.

> NOTE: Make certain that front face of magazine is flush against aperture plate of camera when magazine is installed.

Two shallow indentions have been drilled into the under surface of the knurled lock knob. These indentions match two buttonlike extrusions on the upper surface of the magazine lock. When the knob has been turned down tight, make certain that the lock indentions drop down over the lock buttons. This will prevent accidental loosening of the magazine due to vibration.

Removing the Magazine

To remove magazine from camera, loosen and remove lock knob from lock knob stud. Then swing magazine holddown clamp free of magazine. Pull aft end of magazine from the

Digitized by Google

side, away from camera, until heater quick-disconnect pin and camera locating pin are clear of magazine. Then pull magazine aft to disengage magazine locating pin from camera locating hole in the aperture face.

Aircraft Camera Controls

When remote control operation of the camera is desired, the lens diaphragm must be preset as indicated in the chart on the next page. Selection of the shutter opening then can be accomplished electrically by the pilot during flight by rotating the knob of the remote shutter control switch to one of three positions: DULL, HAZY, or BRIGHT. The proper lens diaphragm opening is obtained by rotating the lens diaphragm control ring to the desired f-stop marking on the lens barrel.

The camera is equipped with a jack plug connector for the connection of an external lens heating unit to prevent frosting of the glass surfaces of the lens in extreme cold temperatures. The camera body also is equipped with heating elements. For operation in extreme cold, these heating elements must be on for a minimum warmup period of ½ hour. The camera heaters are operated by turning the remote shutter control switch to any one of its three light setting positions.

Simplified Operating Procedure

Check installation of camera equipment in aircraft to make certain that all attaching parts and connections are secure, then load and install magazine.

If local control of the camera is desired, set the shutter aperture, camera speed, and lens diaphragm according to the chart on this page.

If the camera is to be operated remotely by the pilot during flight, set the camera speed and lens diaphragm as indicated for remote control operation. The pilot then must determine the light conditions (BRIGHT, HAZY or DULL) during flight, and set the remote shutter control switch accordingly.

For operation in extreme cold, the pilot must plug the external lens heating unit into the jack plug at the front of the camera and turn the remote shutter control switch to any one of its three light-setting positions at least ½ hour before the camera is to be operated.

EXPOSURE GUIDE FOR LOCAL CONTROL

Set lens diaphragm according to BRIGHT, HAZY, or DULL light conditions and selected shutter aperture and frame speed combinations.

NOTE: This table is based on use of class A film and yellow filter.

TABLE I

SHUTTER APERATURE SETTINGS AND FRAME SPEEDS			LENS DIAPHRAGM SETTINGS FOR LIGHT CONDITIONS		
16	32	64	BRIGHT	HAZY	DULL
B	A		f 22	f 11	f 5.6
C	B	A	f 16	f 8	f 4
D	C	B	f 11	f 5.6	f 2.8
E	D	C	f 8	f 4	f 2.8
	E	D	f 5.6	f 2.8	f 2.8

EXPOSURE GUIDE FOR REMOTE CONTROL

Set lens diaphragm according to frame speed.

TABLE II

FRAME SPEED	16	32	64
LENS DIAPHRAGM (DAY)	f 5.6	f 4	f 2.8
LENS DIAPHRAGM (NIGHT)	f 2.8	f 2.8	f 2.8

SHUTTER APERTURE

TABLE III

FRAMES PER SECOND	EXPOSURE TIME IN SECONDS				
	1/62	1/125	1/250	1/500	1/1000
16	B	C	D	E	
32	A	B	C	D	E
64		A	B	C	D

(These tables appear on camera body).

AN-N9 Camera Film Exposure Tables

When photography has been completed, the remote shutter control switch should be snapped back into the OFF position.

P-2 IMPACT-RECORDING CAMERA

This camera is still in the developmental stage.

D-1C MOTION PICTURE PROJECTOR

The D-1C motion picture projector is designed for continuous or single frame projec-

Digitized by Google

tion of motion picture film having perforations on one or both sides of the picture area. The projector is shown in the illustrations below.

Preparation for Use

SETTING UP FOR OPERATION. To prepare for showing films with the D-1C projector, follow these steps.

1. Remove projector from carrying case.
2. Set projector on a table or stand near the back of a room.
3. Place screen near front of room. If possible, keep the screen at least 6 to 8 feet in front of the audience.

ELECTRICAL CONNECTIONS. Always determine the voltage and type of electric current available before connecting the projector to the power supply. Be sure the line to which the projector is connected is 100- to 120-volt, AC, 25 or 50 to 60 cycles; or 100- to 120-volt DC.

Beneath the cylindrical motor housing is a slotted screw (DC resistance control button) which can be turned with a coin to direct the arrow marks AC or DC. Set the switch for the type of current to be used. No damage will result if the motor is set for AC when the current is DC, but the speed of the

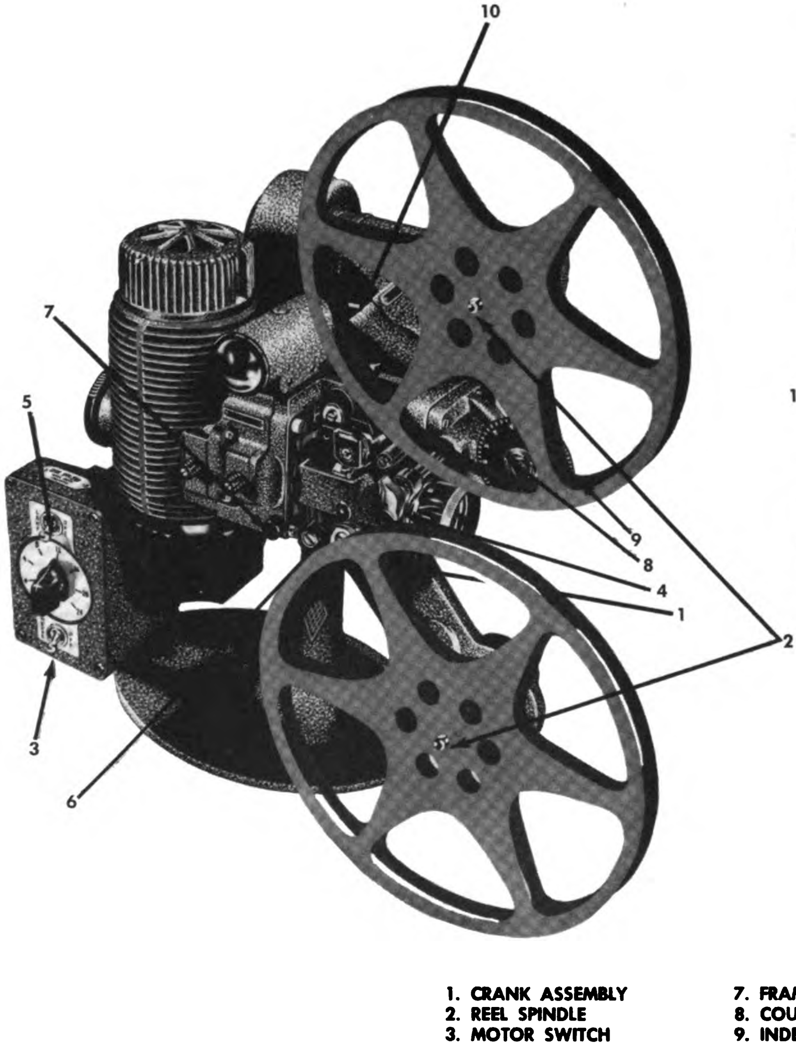

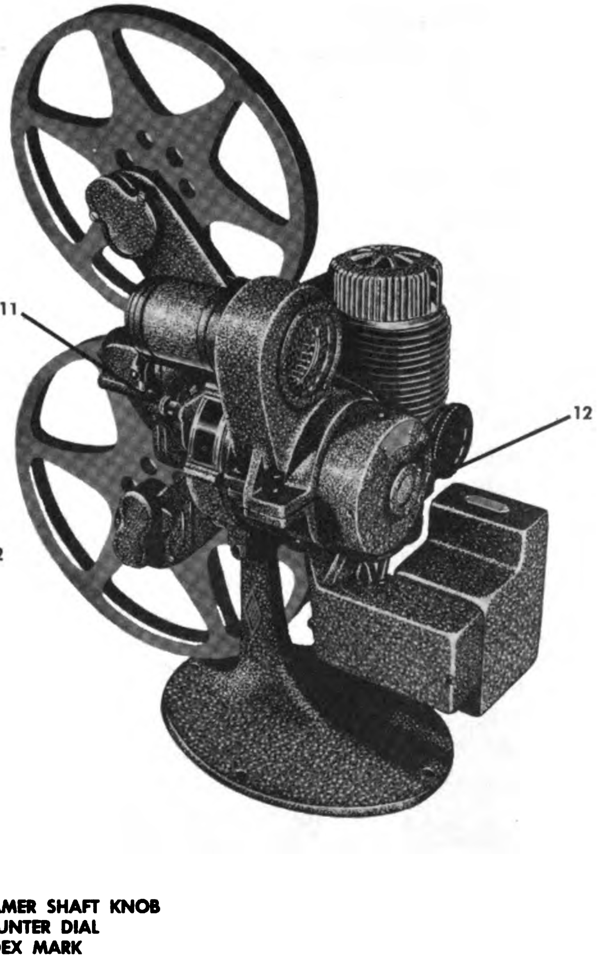

1. CRANK ASSEMBLY
2. REEL SPINDLE
3. MOTOR SWITCH
4. CLUTCH KNOB
5. LAMP SWITCH
6. LENS LOCK
7. FRAMER SHAFT KNOB
8. COUNTER DIAL
9. INDEX MARK
10. RUN-RERUN SWITCH
11. SPEED CONTROL KNOB
12. REVERSING SWITCH KNOB

Front Side View of Projector

Rear Side View of Projector

Digitized by Google

motor will be too great to be controlled by the brake. If set for DC when the line current is AC, sufficient speed cannot be attained even though the speed control knob is fully released.

After adjusting the projector to the voltage and type of electric current, take these two precautions before connecting it.

a. Be sure the power line is fused for at least 15 amperes. If other electrical devices are connected to the same circuit, the fuse should be ample to accommodate the devices and allow a 15-ampere margin for the projector.

b. Be sure that the motor and lamp switches are in the OFF position.

Plug the line cord into the receptacle at the back of the projector and connect to wall or extension cord receptacle.

PROJECTOR ADJUSTMENT. Use the following procedure to adjust the projector to the screen.

1. Turn on the motor switch and the lamp switch. Unless the motor is running, the projection lamp will not operate.

2. If electrical connections are correctly made, projector mechanism will now operate and a beam of light should be projected on the screen.

3. Move projector on its stand or table to such a position that the projected beam coincides with screen. Tilt projector to required angle by turning knurled-head adjusting screw.

4. With projector operating and lamp turned on, loosen the lens lock by turning to the left, and slide lens forward or backward in the carrier until outlines of the aperture or frame are sharply defined. To further sharpen the focus, revolve the lens first in one direction and then in the other. Lock lens in position by turning the lens lock clockwise.

5. If projected image is larger than screen, move projector closer. If image is too small, move projector farther from screen.

6. If light on screen flickers, turn speed control knob counterclockwise to increase the speed. The proper projection speed for silent films is just above the point of noticeable flicker.

Threading the Film

The pilot light unit assembly can be used when threading the projector in a darkened room. To operate the pilot light, pull the button forward. To turn the light off, push it back. The pilot light should be off when the projector is in operation.

Listed below are the steps to be followed in threading film through the projector.

1. Place the crank assembly in down position before threading.

2. Place the loaded reel on the reel spindle assembly of the upper reel arm. Press the reel firmly on the spindle until the small retaining spring-ball locks the reel on the spindle.

3. Pull off about 18 inches of leader film for threading. The film, if correctly wound, should feed from the front of the reel with the emulsion, or dull, side out. (*Exceptions:* Duplicates from original reversal film, prints of 16-mm negatives, and Kodachrome films are wound and projected with the emulsion side in.) The film should come off the bottom of the reel as shown in the illustration, and the objects on the film should be upside down as they pass through the projector mechanism.

4. Thread the upper sprocket as shown in the illustration on the following page. Lead the film above film roller assembly and below sprocket assembly. Slide film as far toward machine as it will go. Holding the film snugly around sprocket with left thumb and index finger, press on sprocket guard assembly, to open the guard. Pull gently on film until the perforations seat on the sprocket teeth. Then release the guard, locking the film on the sprocket.

5. Form the upper loop as shown in the upper right illustration. Swing the gate operating lever upward, which will open the lens carrier. (This lever is beyond the projection lens.) Now form the first loop, following the loop outline on the side of the gear case. Pass the film through the film channel behind the lens, being certain that it is fully seated in this channel. Then close the gate by pressing down the gate operating lever as far as it will go.

6. Form the lower loop as shown. Follow the outline on the gear case, and slip the film

Digitized by Google

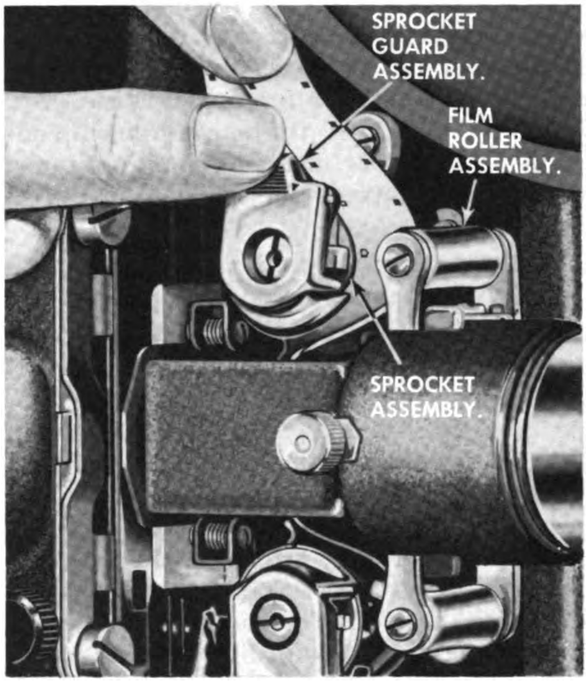

Threading Upper Sprocket

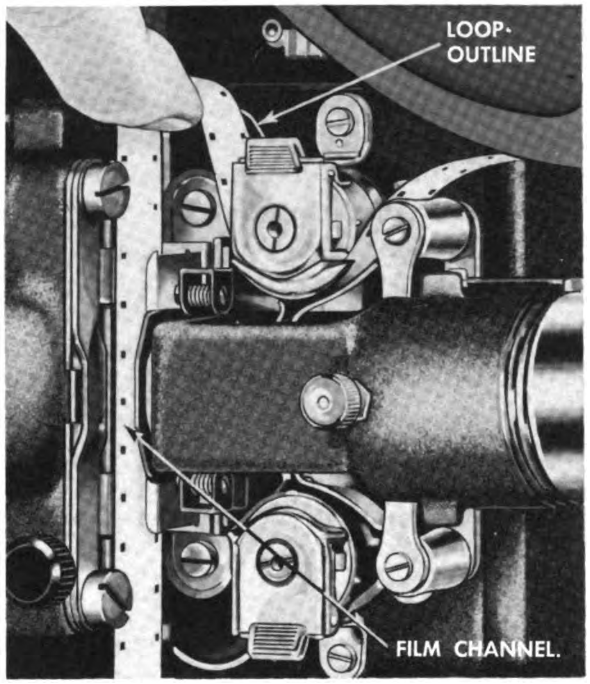

Forming Upper Loop

over the second sprocket assembly. Press the film as far toward the projector as it will go and, while maintaining correct loop size, lock the film in place by pressing on sprocket guard assembly and drawing the film over the sprocket assembly until the sprocket teeth engage the film perforation. Release sprocket guard.

7. Pass the film over the top of the takeup reel as shown in the front side view of the projector. Remove the film slack before starting the projector, by revolving the takeup reel clockwise.

Motion Picture Projection

Before starting the projector, check for the following:

a. Adequate loops formed in film strip above and below the film channel.

b. Film engaged in sprockets.

c. Lens carrier assembly closed.

d. Film attached to takeup reel with all slack removed.

Operate the projector according to the procedure outlined below.

1. Set reversing switch knob at FORWARD. The knob is shown in the illustration

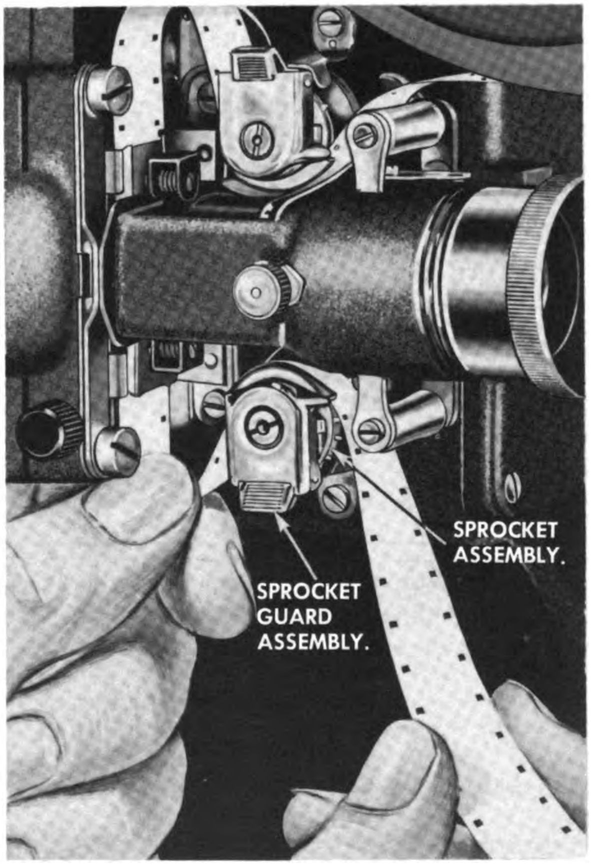

Forming Lower Loop

on this page.

2. Set run-rewind switch at RUN.

3. Turn on the motor switch and turn the clutch knob in a clockwise direction to set the clutch operating lever to the IN position.

4. Turn on the lamp switch.

5. As the first title or picture appears on the screen, loosen lens lock and carefully revolve the lens, first in one direction, then the other, until the title or picture appears in sharp focus. Lock in focus with lens lock.

6. If the picture frame line shows on the screen, turn the framer shaft knob to make the frame line disappear. If framing moves the picture off the screen, readjust the knurled-head adjusting screw.

Still Picture Projection

The procedure for still picture projection is as follows:

1. Turn clutch knob counterclockwise, thus setting the motor clutch operating lever in OUT POSITION, which disengages the motion picture mechanism. If no picture appears on the screen, the closed section of the shutter is obscuring the light. Turning the clutch knob to the right and left once or twice will bring the open section of the shutter into correct position, thus permitting the projection of still pictures.

2. Turn the crank assembly to the up position. The hand crank will operate only when the clutch knob has disengaged the motion picture mechanism. The counter dial records the number of frames that have been shown as still pictures. It may be set at any point opposite the fixed index mark. It advances one number for each picture projected by means of the single-frame hand crank. The heat filter assembly assures maximum brightness for single-frame projection.

3. Adjust the lens to focus a still picture. Refocus when motion is resumed.

Reversing. The reversing switch knob permits reversing of the film movement at any time during projection. To reverse, stop the projector mechanism and disengage the clutch knob assembly by turning the clutch knob in a counterclockwise direction to set clutch operating lever in OUT position. Push the forward-reverse switch knob to the REVERSE position. Start the projector motor. The lamp may be on or off, as desired. To start mechanism with film running backwards, engage auxiliary clutch knob assembly.

Rewinding. To rewind film, lead the film on the takeup reel to the empty reel. Disengage the clutch knob and move the run-rewind switch lever from RUN position to the REWIND position. After the motor gains speed, turn the clutch knob. The film will be rewound rapidly. Immediately after rewinding, and before removing the loaded reel, return the run-rewind switch lever to the RUN position.

Service Troubles and Remedies

The following chart lists the probable causes and suggested remedies of difficulties likely to occur when using the D-1C projector.

Trouble	Probable Cause	Remedy
PROJECTOR MOTOR WILL NOT RUN, LAMP DOES NOT LIGHT	Current supply cord not making proper contact with the power outlet.	Check to make certain all cords are properly connected and making good contact.
	No current at the supply outlet.	Check outlet with ordinary lamp.
	Open circuit in line cord.	Check with another cord known to be good.
	Motor switch defective.	Replace defective switch.

Digitized by Google

Trouble	Probable Cause	Remedy
LAMP LIGHTS, BUT MOTOR DOES NOT RUN	Motor brushes sticking, or worn.	Remove motor brushes; clean out brush holders. If brushes are worn to less than ⅛ inch in length, replace them.
	Reverse switch broken.	Remove motor cap assembly and replace broken parts.
	Motor armature shorted or burned out.	Replace armature.
MOTOR O. K., BUT PROJECTION LAMP DOES NOT LIGHT	Lamp burned out.	Replace lamp.
	Lamp switch not turned on.	Check switch to see that it is in the ON position.
	Lamp switch burned out.	Replace defective switch with new one.
SPEED VARIES, OR PROJECTOR RUNS TOO FAST	Motor brushes worn.	Replace brushes when worn to less than ⅛ inch in length.
SPEED NOT EVEN ON FORWARD AND REVERSE	Motor cap and switch assembly not adjusted properly.	Loosen the four screws in motor cap and switch assembly, and slightly twist the cap until the speeds are even.
SPEED SLOW	Operating on AC with AC-DC switch set for DC.	Set AC-DC switch for type of current machine is operating on.
	Clutch slipping.	Adjust clutch.
	Brake control screw in too far.	Screw brake control in counter-clockwise direction until correct speed is attained.
SPEED FAST	Brake control plunger or spring missing.	Remove brake control and replace missing parts.
	Operating on DC with AC-DC switch set for AC.	Set AC-DC switch for current on which machine operates.
EDGE OF APERTURE OPENING UNEVEN AND FUZZ PROJECTING INTO PICTURE AREA	Dirt in aperture opening.	Use brush supplied with projector and lightly, but thoroughly, clean the edges of aperture opening. Carbon tetrachloride or alcohol may be used as a solvent. If the brush is not available, a pipe cleaner may be used. Be sure that the projector is not running when cleaning the aperture.
PICTURE NOT SHARP ON SCREEN. ONE SIDE OF PICTURE ONLY, OR THE ENTIRE PICTURE, MAY NOT BE SHARP. PICTURE MAY GO IN AND OUT OF FOCUS	Lens or condenser elements may be dirty, oily, or fingerprint spotted.	Use lens cleaning tissue and thoroughly clean surface of lens and condenser elements. If all dirt cannot be removed in this manner, lens cleaning fluid should be wiped on the lens surface and followed by a thorough cleaning with lens cleaning tissue.
	Film clearance between aperture plate and pressure plate too loose, or too tight.	Set lens carrier so that, when closed, the pressure plate seats perfectly flat against the aperture plate, just tight enough to lift the pressure plate off its seat on the yoke from 0.002 to 0.003 inch.
PICTURE OUT OF FRAME	Framer knob not adjusted properly.	Turn framing knob until picture is properly framed.
	Film out of frame.	Check projector framing with film known to have proper frame line.

NOTE: The projector should operate at 16 frames per second. A loop of film, 80 frames in length (2 feet), should pass through the projector 12 times per minute when operated at 16 speed.

Digitized by Google

Trouble	Probable Cause	Remedy
FILM DOES NOT WIND UP TIGHT ON TAKEUP REEL	Friction gear in lower case (takeup arm) slipping.	Replace friction gear.
	Flanges on takeup reel bent.	Use a reel which is in good condition.
FILM DOES NOT WIND TIGHT WHEN REWINDING	Tension on lower reel spindle too weak.	Increase tension on lower spindle.
FILM LOSES LOWER LOOP	Torn or chipped perforations in film.	Check film carefully; remove all torn or chipped perforations.
	Poorly made splice in film.	Resplice film.
	Film clearance between aperture plate and pressure plate too loose, or too tight.	Set lens carrier so that, when closed, the pressure plate seats perfectly flat against the aperture plate, just tight enough to lift the pressure plate off its seat on the yoke 0.002 to 0.003 inch.
	Too much clearance between sprocket and film guide.	Adjust film guide so that there is from 0.012 to 0.014 inch of clearance between the inner shoulder of film guide and the inner edge of sprocket.
	Shuttle does not project far enough through aperture plate.	Replace, or adjust shuttle.
PICTURE UNSTEADY	Film clearance between aperture plate and pressure plate too loose.	Set lens carrier so that, when closed, the pressure plate seats perfectly flat against the aperture plate — just tight enough to lift the pressure plate off its seat on the yoke from 0.002 to 0.003 inch.
	Film perforations damaged.	Remove all damaged portions of film.
	Photographed image not steady on film.	Project film on another projector to check. Adjusting the projector cannot correct unsteadiness if film is at fault.
FILM SCRATCHED	Dirt or emulsion accumulation in film channel, or around sprockets and guards.	Brush away as much of the free dirt as possible. Use the aperture brush and carbon tetrachloride to remove dirt which adheres to the parts. Draw a clean lintless cloth through the film channel.
POOR ILLUMINATION	Line voltage lower than voltage rating.	Use lamps with voltage rating equal to voltage of line supply.
	Lamp old, black, and about ready to burn out.	Use new lamp.
	Lamp crooked in lamp house.	Insert lamp in lamp house properly, and screw cap up snug.
	Condensers and lens dirty, or oil covered.	Clean all lens elements thoroughly.
HAND CRANK AND FRAME COUNTER ASSEMBLY CLUTCH STICKS	Clutch yoke assembly may not engage or disengage from clutch head.	Remove hand crank and frame counter assembly from gear case. Loosen the hexagon head screw and adjust clutch yoke key so the swing of the clutch is increased or decreased as required.
	Clutch yoke spring not engaged properly.	Engage spring correctly so necessary spring action is attained.

Digitized by Google

EQUIPMENT FOR FILM ASSESSING

Motion picture photographs taken by the gun camera provide an exact record of the performance and ability of a fighter pilot in exercises involving gunnery, rocket firing, or fighter bombing. Once this film has been correctly exposed and developed, it is ready for assessment. Assessment is an intelligent interpretation of the image thrown on the screen by a projector, such as the D-1C described previously in this chapter.

The film assessing room should be a place that can be darkened as much as possible. It should include the following equipment.

a. 16-mm motion picture projector.

b. Assessing table or workbench upon which to mount the projector.

c. Screen.

d. Assessing scale or lead bar.

e. Calipers.

f. Film reels.

g. Film rack of storage.

h. Film assessing chart.

i. Magazine titling assembly.

j. Lead charts.

The most common projector in use today is the D-1C gun camera motion picture projector. It is described earlier in this chapter. The D-1C has certain advantages over its predecessor, the D-1B, one of which is a separate fan for cooling that is not affected by the speed of the projector.

The best screen to project the image on is the standard beaded movie screen. It should be well secured to the assessing table or wall.

The general layout of the projector and screen is illustrated below.

Film assessing charts can be drawn up from information supplied in appendix VII of this manual.

The magazine titling assembly can be locally made from a standard gun camera. A 3-inch lens should be substituted for the 35-mm lens used in the gun camera.

FILM ASSESSMENT

Proper assessment of aerial gunnery and ground attack film enables the pilot to determine and correct errors in firing range, angle-off, alinement, slant range, and dive angle. However, the assessor can correctly analyze film only if the sighter burst is clearly defined and the aircraft is flown smoothly and within allowable *g*-forces. The effect of slips, skids, and *g*-forces cannot be determined in assessing.

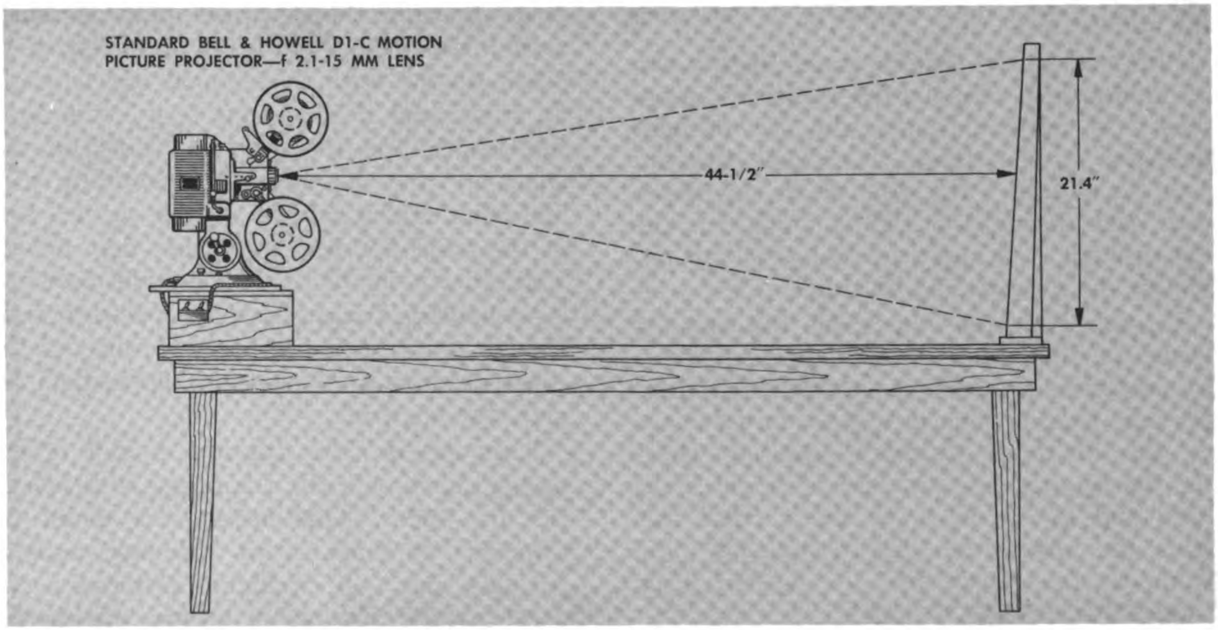

Assessing Equipment — General Layout

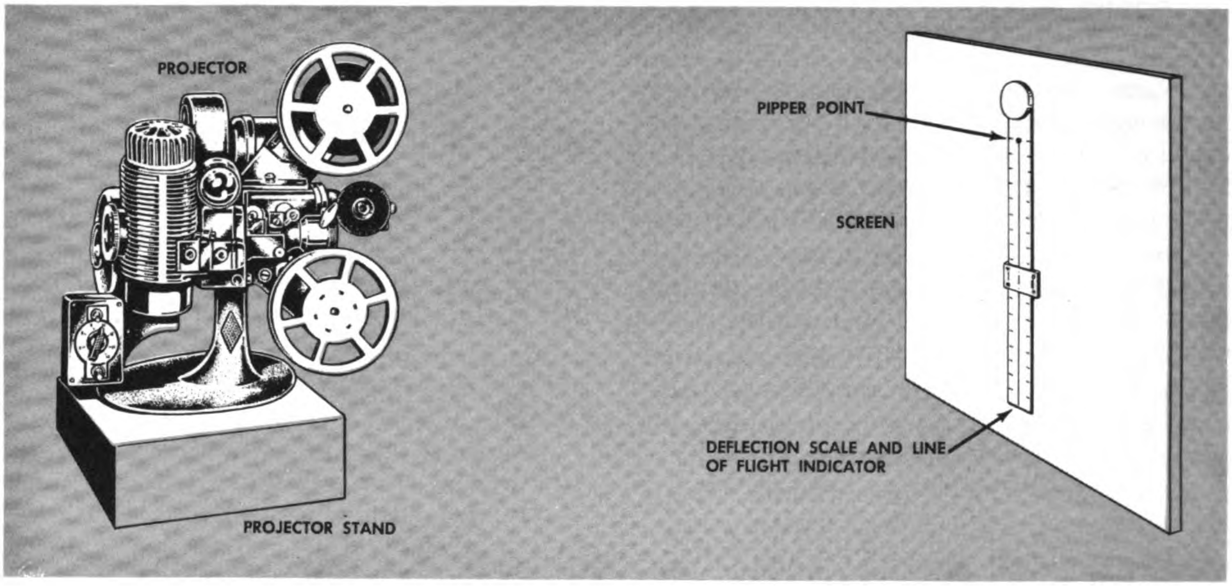

Projector, Screen and Special Equipment Used for Assessing

Estimate Assessing of Air-to-Air Film

In the estimate assessing of air-to-air photographs, the mil coverage of the width of the two target image on the screen is used as a reference to determine range, since the width, unlike the length, does not foreshorten as the angle-off changes. The assessor can make use of this constant value to determine the range and angle-off. The line-of-flight indicator is used to find the line error and the applied lead.

SIGHTER BURST. Before these factors can be determined, though, the projected image must be centered upon the line-of-flight indicator on the screen. Therefore, superimpose the picture of the point where the pipper was held during the sighter burst on the line-of-flight indicator's pivotal point by adjusting the projector on its stand.

RANGE. Run the film until the opening frame of the gunnery pass appears. Using calipers as shown in the diagram on the following page transfer the width of the target image to the air-to-air estimate assessing chart for the type of lens and size of target being used and lay it off down the vertical axis from the intersection of the angle-off lines. Compare the range with the desired firing range.

ANGLE-OFF. Estimate assessing makes use of the foreshortening effect of the target length over width to determine the angle-off. By proper application of the width and length of the target image to the air-to-air estimate assessing chart given on the next page, the assessor can make the necessary interpolation of the foreshortening effect. With calipers, measure the distance between the leading edge and the centerline of the target. Transfer this distance to the air-to-air assessing chart shown on the next page. (This measurement is used instead of the full target length, to eliminate the error in angle-off which would be introduced if the target were other than full length due to fraying.) Then, on the chart lay that distance off horizontally with one point of the calipers on the vertical axis at the range figure as previously determined. The other point of the calipers will then fall on or between the angle-off lines which radiate from a point at the maximum range of the chart. Interpolation between these radial lines gives the angle-off.

LINE ERROR. The distance in mils of the pipper above or below the target is known as the line error. This distance is found by rotating the line-of-flight indicator until it parallels the line of flight. Determine the perpendicular distance in inches between the target and centerline of the line-of-flight

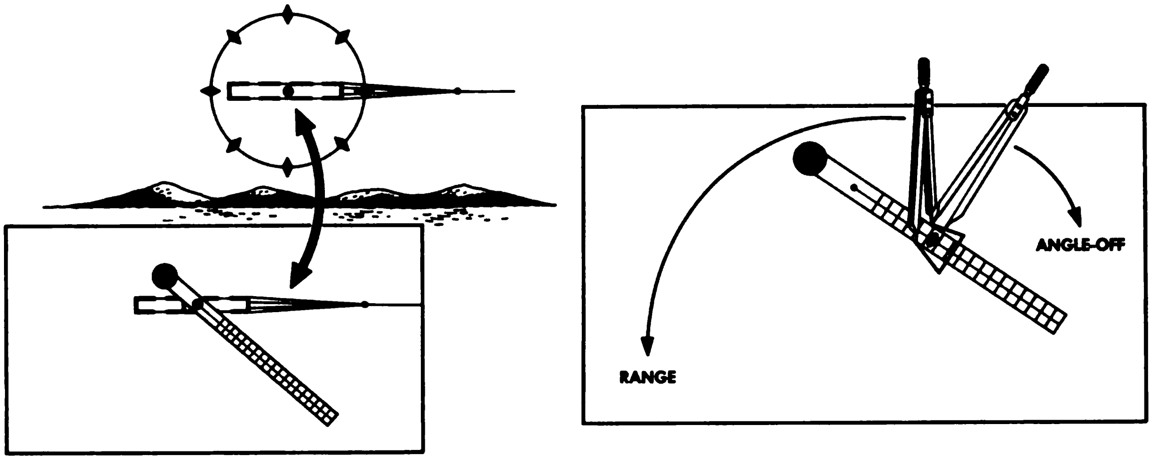

Determination of Range and Angle-off

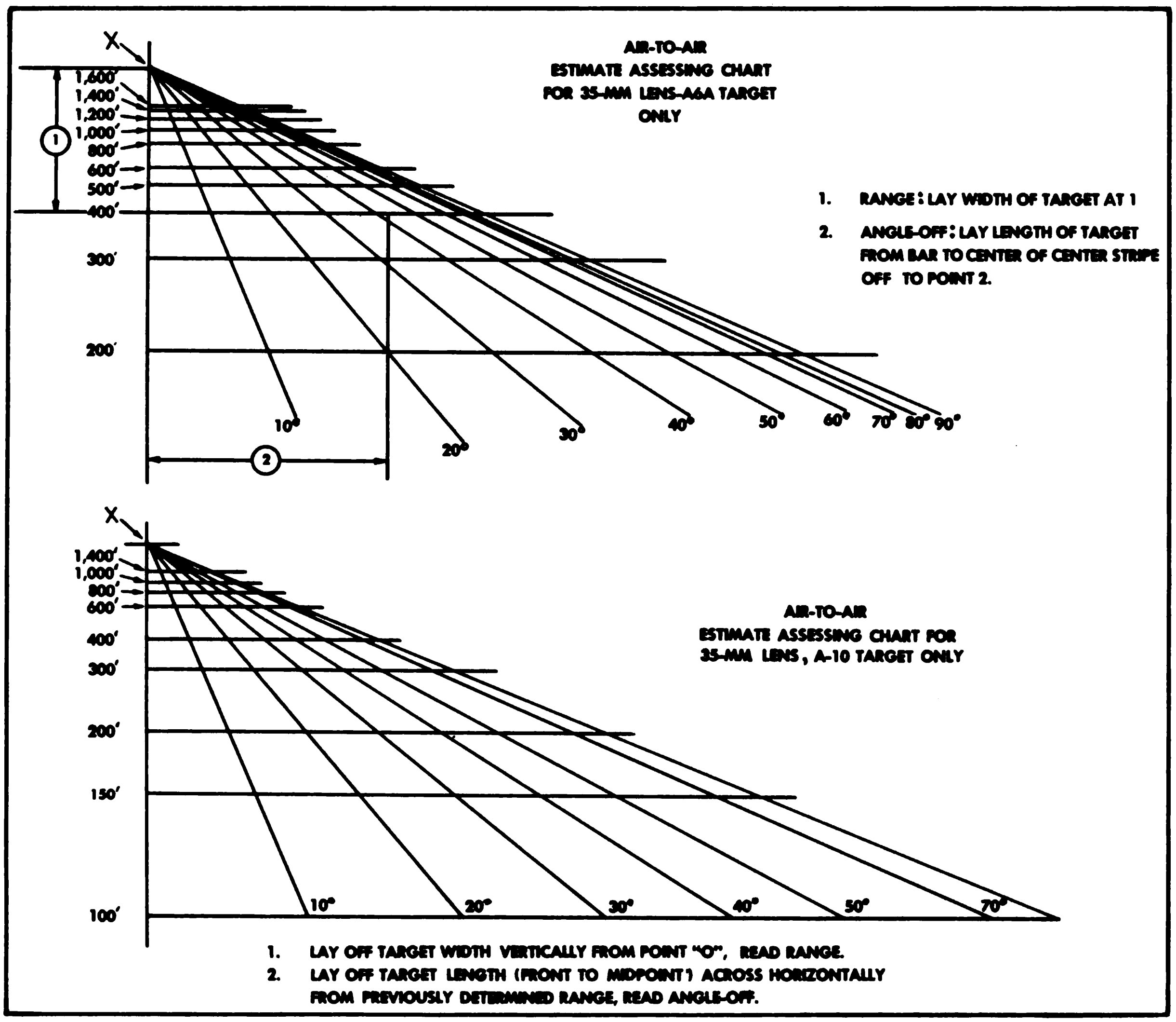

"Air to Air" Estimate Assessing Charts

Digitized by Google

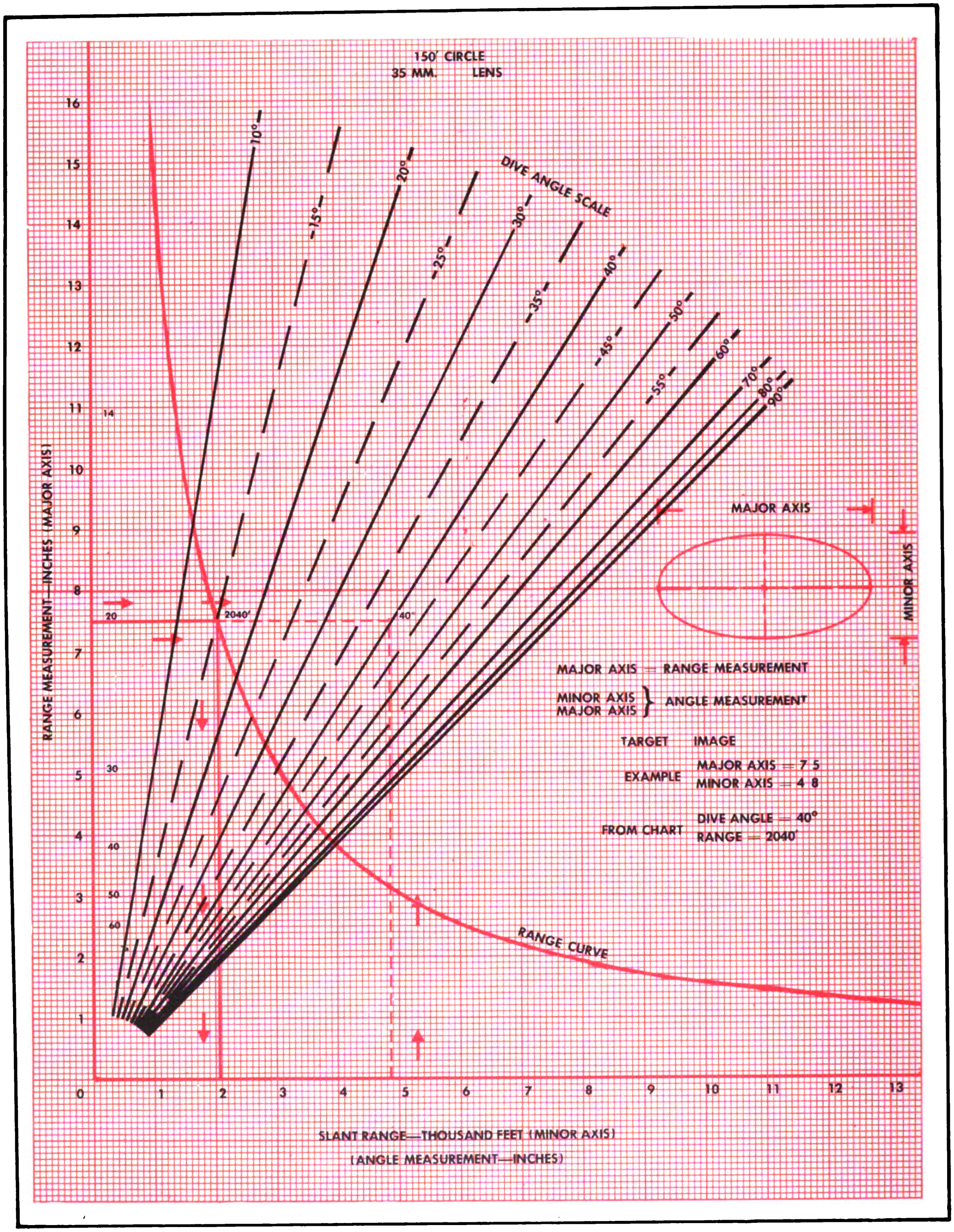

Air-to-Ground Estimate Assessing Chart

Digitized by Google

indicator. The line error is this measurement read in mils according to the ratio 1 inch equals 10 mils.

LEAD. Read the applied lead from the mil scale on the line-of-flight indicator. Compare this applied lead to the correct lead as found on the proper lead chart for the target's true airspeed and its angle-off as previously determined. This comparison will indicate whether or not the lead was correct.

Estimate Assessing Air-to-Ground Film

Air-to-ground assessing requires a knowledge of the target's size and a comparison of its size to the dimensions of the assessed image on an assessing chart. The air-to-ground estimate assessing chart on the preceding page is onstructed and calibrated to correspond to the target's size, thereby giving the diving aircraft's angle and firing slant range. Its use to determine these two characteristics is outlined in the two steps below.

1. Run the film through the projector until the opening frame of the dive run appears. With the calipers, measure the *major axis* — the axis of the target circle perpendicular to the diving aircraft's path over the ground. Lay this measurement off along the major axis of the air-to-ground estimate assessing chart for the type of lens and size of target circle being used. This reading gives the *slant range* in feet.

2. Measure the *minor axis* — the axis of the target circle parallel to the diving aircraft's path over the ground. Transfer this measurement, along the minor axis of the air-to-ground assessing chart from the previously determined slant range, to the dive angle lines. Interpolation between the radiating dive-angle lines gives the *dive angle* in degrees.

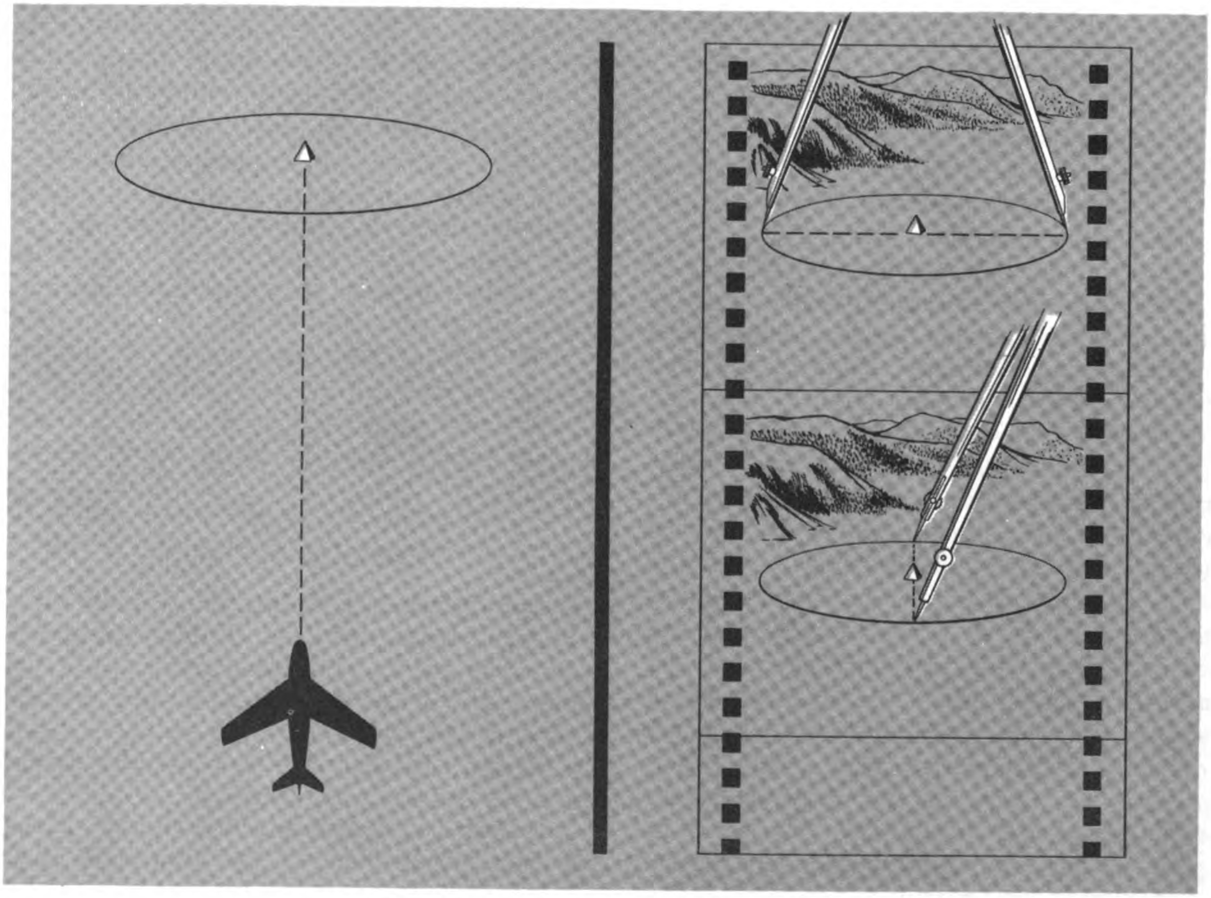

Method of Assessing Air-to-Ground Film

Use of Assessing Charts

Increased emphasis on air-to-air camera exercises against other aircraft has resulted in the need for a simple means of assessing the film obtained on those missions. In a study of USAF aircraft, it was determined which aircraft features were most easily recognized. Fighter aircraft presented the greatest problem because of the narrow fuselage. This necessitated using the vertical stabilizer on the fighter aircraft for measuring the range. For a bomber, the fuselage diameter is a satisfactory range index.

The vertical stabilizer of a fighter is usable as a range index only in those attacks during which both the fighter and the target aircraft are on the same plane or the same level. With high side and low side attacks, the angle to the target has a foreshortening effect upon the picture of the stabilizer. In some cases, however, charts can be adapted for particular attacks.

Because of the circular fuselage of bomber aircraft, more accurate range measurement is possible through a wider assortment of attacks when bombers serve as targets.

Digitized by Google

CHAPTER 6

range specifications and procedures

To become proficient in all phases of fighter weapons delivery, fighter pilots must make controlled attacks on scorable targets. This training should be conducted as frequently as possible. Close supervision in this phase of training is mandatory and can be accomplished if strict aerial discipline is maintained.

This chapter deals with the targets and their arrangement on the various types of ranges. The range procedures, safety precautions, and scoring procedures are explained. In general the material supplements the detailed information on planning, construction, operation and maintenance of bombing and gunnery ranges as covered in AFM 50-18.

The types described here include air-to-air, low angle strafing, skip bombing, dive bombing and rocket firing, and consolidated air-to-ground ranges.

AIR-TO-AIR RANGE

An air-to-air range is a designated airspace reservation above an uninhabited land or water area. This reservation must of necessity be rather large because of the range and striking power of the projectiles fired by fighter aircraft. For example, if a target is towed at an indicated airspeed of 165-220 knots, the average range should be a minimum of 25 miles long and 7 miles wide. A typical air-to-air range is shown in the illustration on the following page.

The range may be identified either by prominent landmarks or by range markers easily visible from the air.

Safety Precautions

Safety measures will be obeyed in accordance with the provisions of AFR 50-13.

Air-to-air passes on a towed target will terminate at a minimum of 600 feet range, or 15° angle-off whichever occurs first.

Firing will not be conducted when weather conditions are such that the pilot of the tow aircraft cannot determine the range boundaries, unless adequate means, such as radar coverage, have been established and approved at major command level to insure that the range is clear and participating aircraft are within the boundaries of the range.

The commander will issue timely warning through local press and radio to prevent uninformed persons from trespassing on the range during periods that training is in progress. When the range is not in continuous use throughout the year, the commander will notify the Chief of Staff, USAF, and commanders of nearby military and naval installations, CAA, and corresponding maritime organizations, to preclude aircraft, or shipping as in the case of overwater target areas, from trespassing during firing periods. The range will be declared a danger area during firing periods.

Digitized by Google

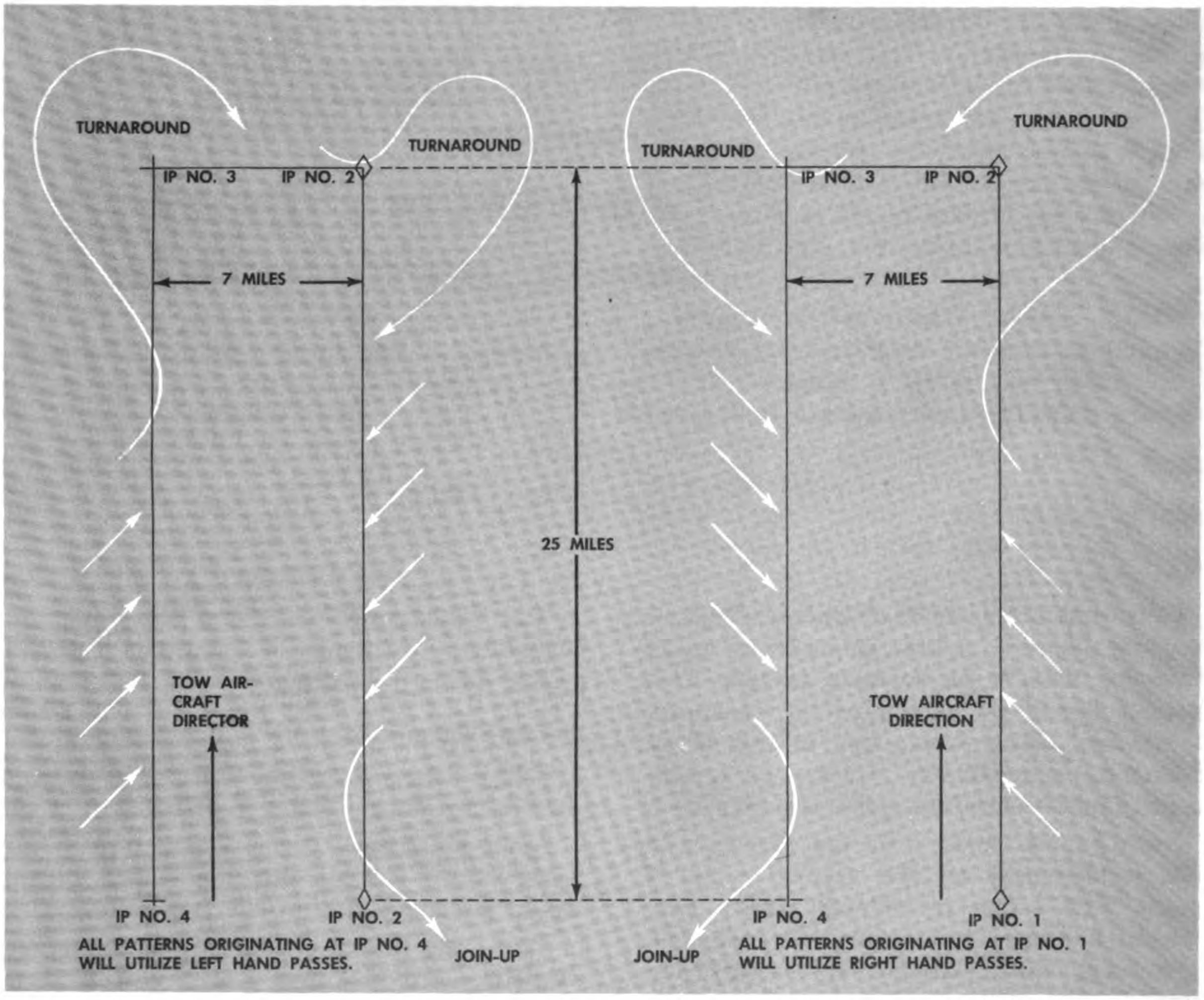

Typical Air-to-Air Range

After completion of firing and prior to landing, pilots will turn off all armament switches, and comply with local safety regulations.

Under no circumstances will a pilot fire on a closed range, or when he has negative radio contact with all other members of the flight and the tow aircraft.

Flights should be spaced 5 minutes apart. All flights firing on the range simultaneously will proceed around the range in the same direction.

Commanders will issue such local rules and regulations as are necessary to prohibit aircraft carrying live ammunition from flying over cities, towns, or any areas where accidental discharge or release of the ammunition might cause damage to government or private property, or endanger life.

Unit commanders will be responsible for, and must be sure that all personnel towing targets or firing on the range are thoroughly familiar with all range rules and procedures. It will be the responsibility of the unit commander to see that these rules and procedures are strictly enforced.

Flight Pattern

Aircraft equipped with aerial machine guns or cannon will utilize the standard USAF 90° high-side type pass when firing at towed targets, either winged or banner. This pass may be initiated from the right or left side of the target, dependent upon the direction

Digitized by Google

of the bullet travel. The air-to-air pattern on any one target will contain a maximum of four aircraft at any time.

Scoring

Scoring on air-to-air targets is described in chapter 9. Gun camera film will be used in all air-to-air missions for assessing as described in chapter 5.

AIR-TO-GROUND RANGES

The selection of a site for a ground attack range requires that a maximum safety limit be maintained in order to protect personnel and equipment. It must be clear of obstructions and should be isolated by a minimum distance of 2 miles from all other installations. If other than practice ammunition, rockets, and bombs are to be used, the commander must set up corresponding safety limits and range patterns.

The surface of a range should be level and if possible, soft enough to prevent or minimize richocheting of the projectiles fired. The surface should be dug up either by plowing or harrowing for a distance of 50 feet in front of and behind all low angle strafe targets to insure maximum bullet absorption. This should be done at frequent intervals to insure that the surface does not harden.

Control Tower

The range control tower should be at least 30 feet high and located for ease of observation of targets and pattern. The distance from the targets will vary with the terrain.

A control panel should be at the base of the control tower, in such a position as to be easily visible to the pilot turning in on his firing pass. This panel should be at least 10 by 10 feet and constructed so as to be easily changed from red to white. The position of this panel opens and closes the range. A red panel indicates a closed range, a white panel, an open range. This panel, in addition to radio and flare gun, will prevent pilots from firing on a closed range.

Items of equipment necessary to conduct operations are located in the control tower. The minimum of equipment is as follows:

a. Two-way radio equipment.
b. Wide vision binoculars.
c. Flare gun.

Spotting Tower

The construction of the spotting tower can be similar to that of the control tower. There should be a telephone system between the control and spotting tower and a duplicate plotting method in the spotting tower.

Low Angle Strafing Range

A low angle strafing range has 6 to 8 targets placed as shown on this page.

Each target is 15 feet square. The 36-inch bull's-eye is placed 36 inches above the center of the target, to take care of gravity drop if the aircraft is harmonized for shorter

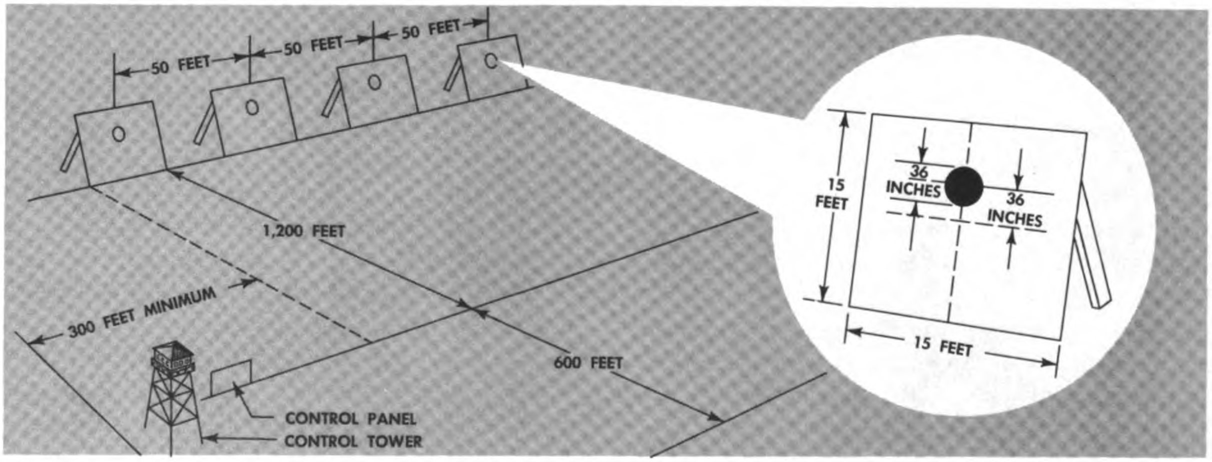

Low Angle Strafing Range

Digitized by Google

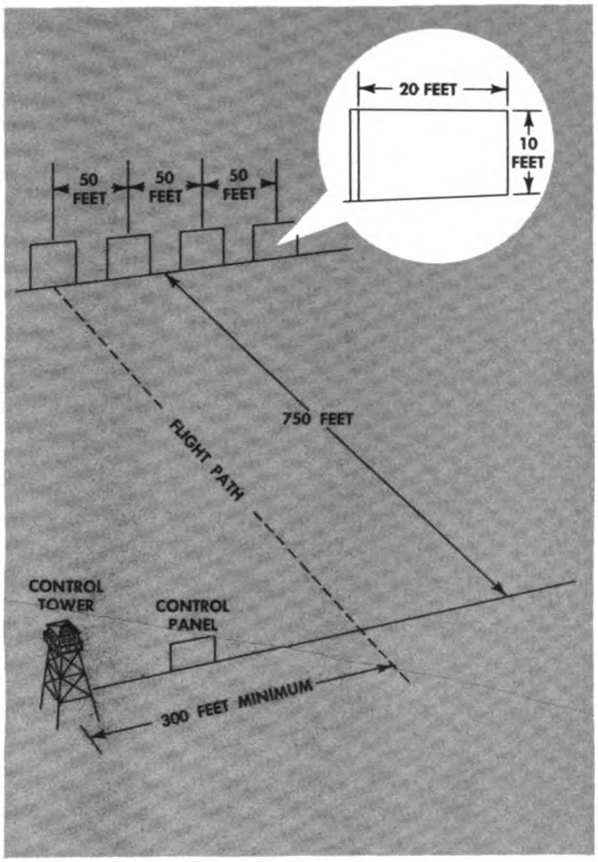

Skip Bombing Range

ranges. (The 2-mil pipper coincides with the 36-inch bull at 1,500 feet range.) The targets are mounted about 80° from the horizontal, and are located 1200 feet from and parallel to the foul line. The target structure should permit easy removal of the panels for scoring.

After each sortie a new target should be used, or the old ones carefully patched. Merely marking the previous bullet holes is not sufficient to insure correct scoring.

Colored ammunition will aid in scoring, as some richochet holes are very similar to actual bullet holes. Due to the angle of penetration, a highly visible color such as red or green will stand out the best.

Skip Bombing Range

The skip bombing range is very similar in layout to the low angle strafing range. There are two main differences. Each target is 10 by 20 feet, and the foul line is located 750 feet from the targets for jet aircraft and 600 feet for reciprocating aircraft. The layout is shown to the left.

The terrain within a radius of 2 miles must be cleared of any obstructions that might interfere with the lengthly low level approaches.

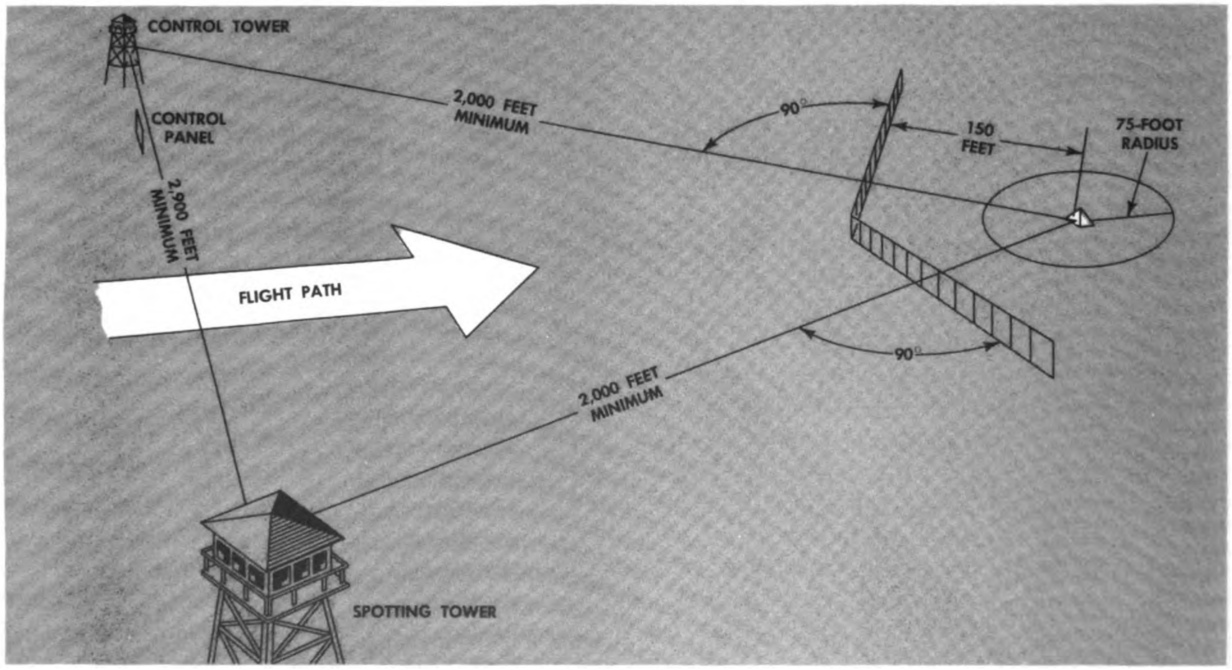

Range Layout for Dive Bombing, High Angle Strafing, and Rocketry Range

Digitized by Google

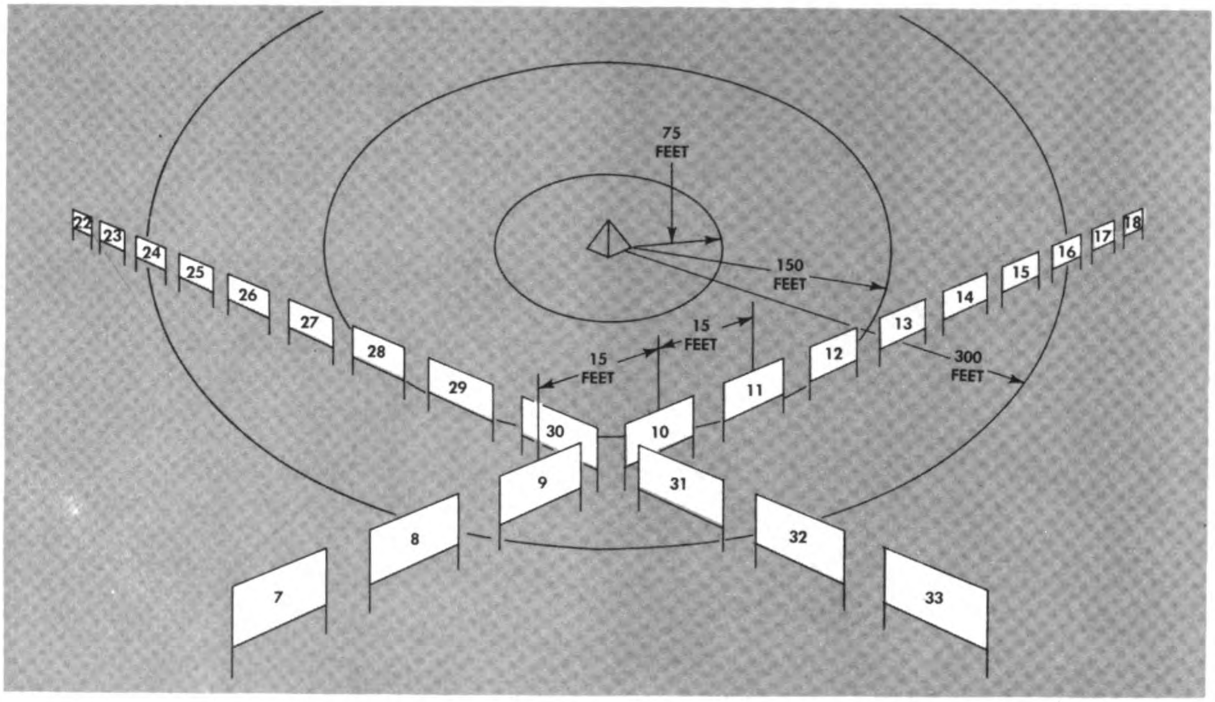

Arrangement for Scoring Stakes

The targets may be constructed from used aerial targets sewed together. For visibility the targets should be painted a color in sharp contrast to the background.

Dive Bombing, High Angle Strafing, and Rocketry Range

The dive bombing, high angle strafing, and rocketry range consists of a pyramidal target or other suitable aiming point, control tower, spotting tower, and scoring system. The pyramidal target is 8 by 8 by 8 feet and is placed at the center of a 150-foot circle. The layout is shown at the bottom of the previous page. The circle may be constructed of any material cheaply procured such as used automobile tires. The color of the circle outline and the pyramid should contrast with that of the surrounding terrain. The spotting stakes are placed at 15-foot intervals, with one line perpendicular to the control tower, and the other perpendicular to the spotting tower. An alidade can be used in an alternate method of plotting impact points.

One method for spotting is to place two lines of numbered stakes in front of the target as shown in the drawing of the range layout. One line of stakes is perpendicular to the line from the spotting tower to the center of the target. The other line of stakes is perpendicular to the line from the control tower to the target. Each line of numbered stakes is 150 feet from the target at the nearest point. Each stake should have a number in black 30 inches high on a board 3 feet square. Distance between stake centers is 15 feet. The number of stakes is governed by local policy, but the minimum scoring circle should be 600 feet in diameter. In other words the "line" of numbered stakes should be of sufficient length to enable the plotters in the two towers to plot impact points for a radius of 300 feet around the bull's-eye. The arrangement of the stakes is shown above.

Second method is to place the numbered stakes on an arc with a 100-foot radius and 10° apart. This arrangement is described in AFM 50-18.

With either of the above arrangements scoring can be done by observing the impact in relation to the nearest numbered stake. The stake numbers and approximate location of impacts are noted and sketched on a card and later plotted on a plotting sheet.

Digitized by Google

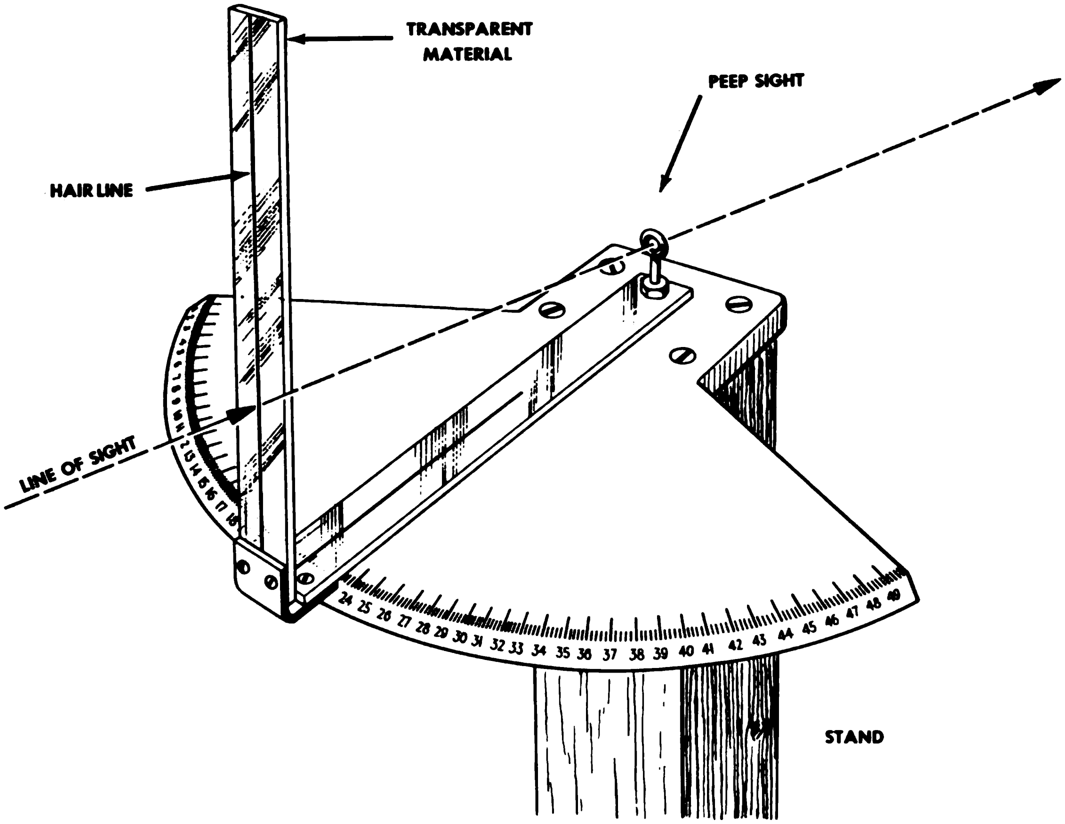

Simple Alidade

A third method for spotting is by use of the simple alidade of the type shown on this page. The construction and use of the alidade are described in AFM 50-18.

Consolidated Air-to-Ground Range

The three types of ground ranges may be easily consolidated. With the addition of another spotting tower and duplicate targets a dual range can be laid out as shown on the following page.

The dual range is desirable, because it offers the possibility of right hand and left hand patterns, preventing a pilot from becoming a "left" or "right" pilot. Furthermore, one low angle strafing range may be scored while firing is being conducted on the other.

The recommended range line is 600 feet from and parallel to the foul line. The range line is the maximum distance from the targets where ordnance is discharged. This is to confine the skip bombing and low angle strafing ranges. However in some instances, at the discretion of the unit commander, the range line may be moved nearer to or farther from the foul line.

Range Procedures

All pilots will be thoroughly briefed on safety precautions and range procedures.

Each flight will proceed to the range in accordance with local directives and establish radio contact with the ground range. Each pilot will then check in with the range officer giving his position in the flight, aircraft number, and name (or squadron number).

Upon reaching the range, each pilot will make a spacer pass at a minimum of 2,000 feet above ground, to doublecheck the control panel, establish flight spacing, and enter the standard USAF rectangular pattern. The pattern is shown to the right.

Each pilot will call his number and control panel color each time he commences the final turn on to his assigned target. For example: "Tucson two white panel." If a dual range

Digitized by Google

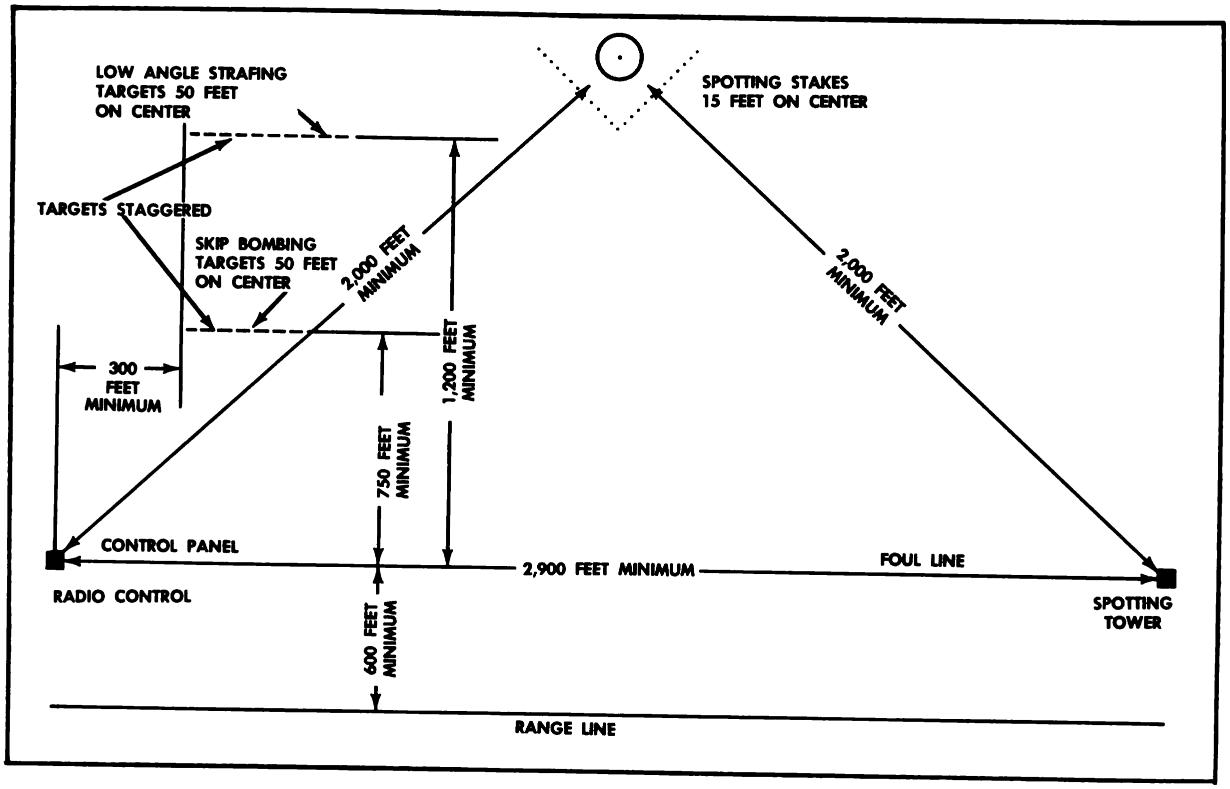

Consolidated Air to Ground Range

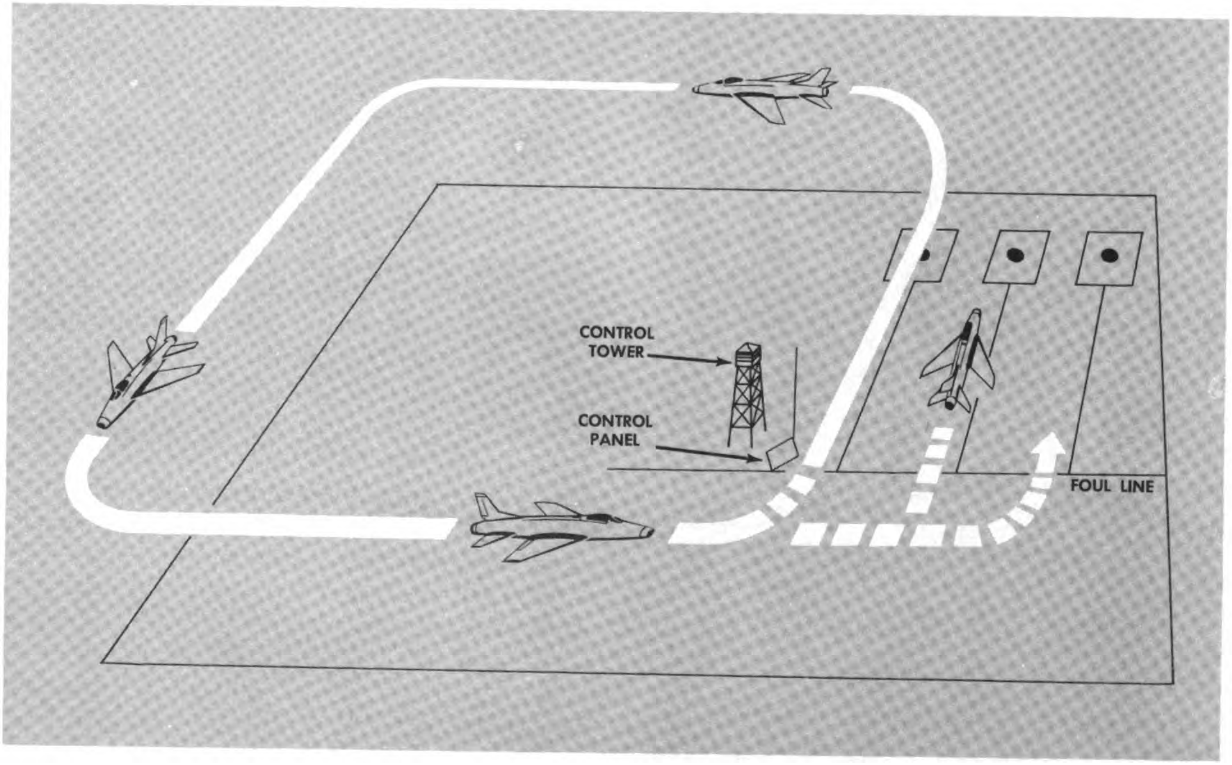

Flight Pattern for Low Angle Strafing and Skip Bombing

Digitized by Google

is being used, the pilot will at this time also state the range. "Tucson two, right range, white panel."

All patterns will be flown in such a manner to insure that the nose of the aircraft is never pointed at the control tower.

Dive bombing and rocketry patterns must be flown so that the flight path while firing is from the towers toward the target and perpendicular to a line between the control and spotting towers. Dive angles, slant ranges, and minimum altitudes will depend upon the type of missions flown. The illustration below shows a method for determining the aircraft's altitude above ground level during skip bombing.

Safety Precautions

Safety measures will be observed in accordance with the provisions of AFR 50-13.

The commander will issue timely warnings through the local press and radio to prevent uninformed persons from trespassing on the range during periods that training is in progress. When not in continuous use throughout the year, the commander will notify the Chief of Staff, USAF, and commanders of nearby military and naval installations, CAA, and corresponding maritime organizations to preclude aircraft or shipping, as in the case of overwater target areas, from trespassing during firing practice.

After completion of firing, and prior to landing, pilots will turn off all armament switches, and comply with local safety regulations.

Under no circumstances will a pilot fire on a closed range or when he has negative radio contact with all other members of his flight and the range.

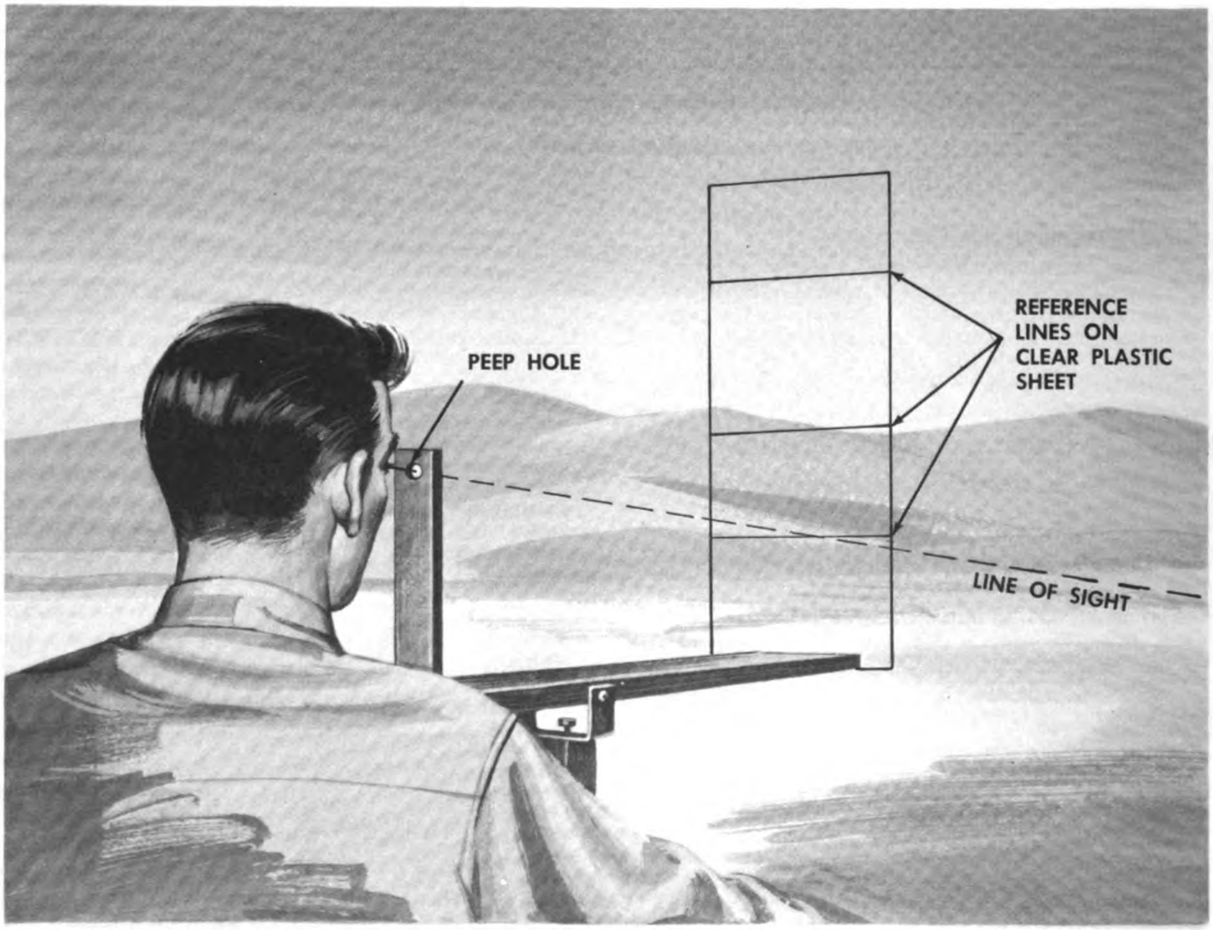

Method of Determining Altitude Above Ground Level — Skip Bombing

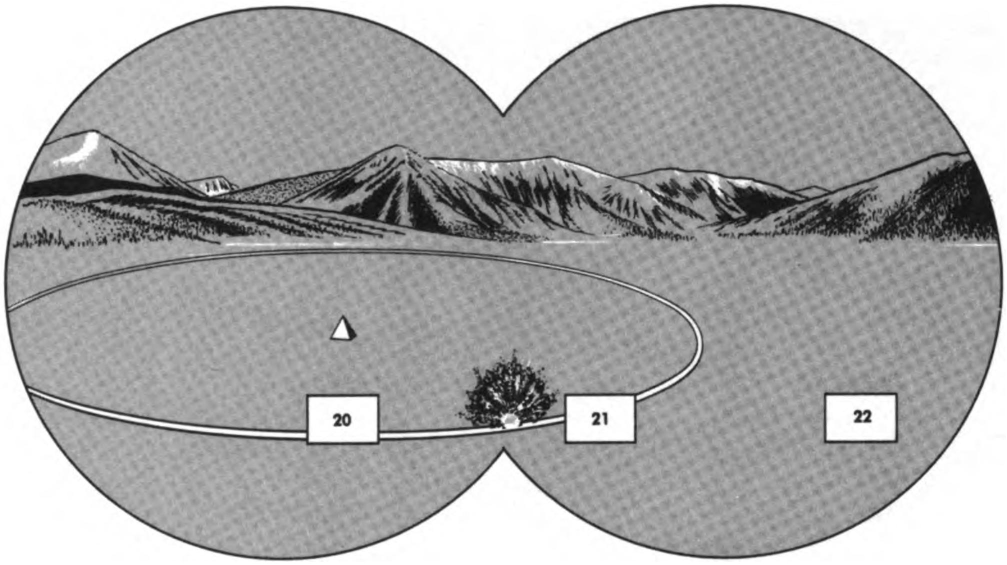

Bomb Plot: 20¾ (Observed through Binoculars)

Commanders will issue such local rules and regulations as are necessary to prohibit aircraft carrying live ammunition, practice or live bombs and rockets, from flying over cities, towns, or any areas where accidental firing or dropping might cause damage to government or private property or endanger life.

> NOTE: Bombing and rocketry range procedures and specification in this manual are designed for the use of *practice* bombs and rockets. In the event other than practice bombs or rockets are used, appropriate range procedures and specifications will be adopted to maintain safety.

Unit commanders will be responsible for, and must be sure that all personnel operating the ranges or firing on them are thoroughly familiar with all range rules and procedures. It will be the responsibility of the unit commander, usually through the range control officer, to see that all procedures and safety precautions are strictly enforced.

The range officer should inspect the condition of the range, especially the area around the low angle strafing and skip bombing targets, and insure that crash and fire equipment is standing by before opening the range for firing.

There will be a maximum of four aircraft in the air-to-ground pattern at any one time.

The range officers will close the range if he is unable to establish radio contact with the flight. He will signify this by changing the control panel to red and/or firing red flares.

Scoring Methods

Low angle strafing and skip bombing scores are usually obtained as a percentage by dividing number of hits by total rounds fired or bombs dropped. Local policy determines reduction in score due to fouls or other violations during practice firing.

Dive bombing, rocketry, and high angle strafing plots are scored as footage error from the bull's-eye. The number of the stake nearest the center of the impact is phoned to the control tower from the spotting tower.

(The plots may be spotted to the nearest ¼. In the situation illustrated above, for example, where the impact point is three-fourths of the distance between stakes 20 and 21, the plot is 20¾.)

The impact point of the projectile is at the intersection of the line from the spotting tower to the stake and the similar line from the control tower. The footage error and clock position is determined from the score card and is called to the pilot to enable him to correct his next attack.

The slant range and dive angle must be entered on the score sheet. This range and angle may be determined with a "harp" like the one shown on the following page.

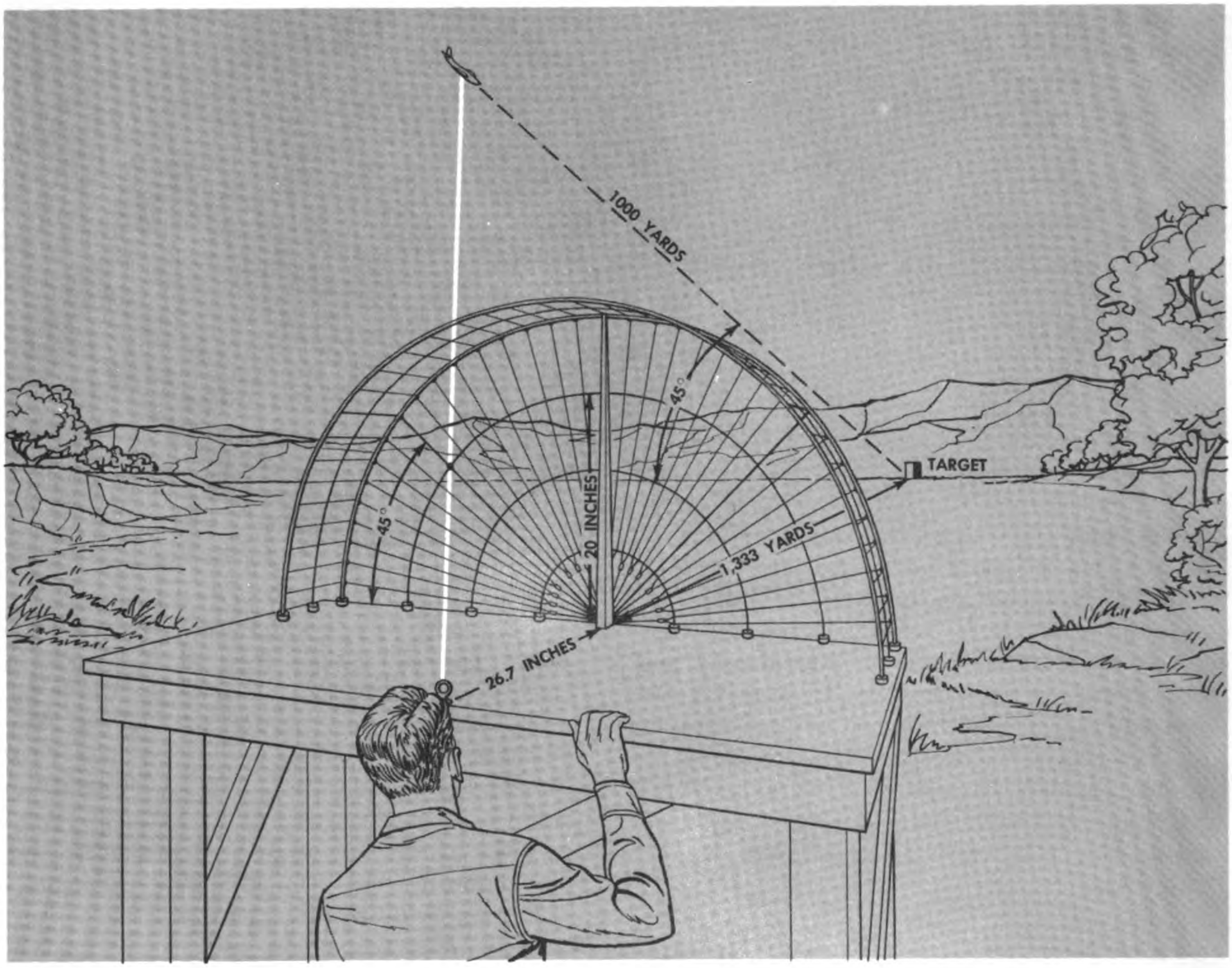

By sighting through a peephole on the harp table the observer follows the motion of the aircraft, and notes along which wire the aircraft appears to be travelling. Each wire corresponds to some different dive angle; hence by radio communication the pilot is told what his dive angle is. Similarly, the harp is calibrated so that when the aircraft appears to cross one of the circular wire supports the range is known and can be radioed to the pilot.

"Harp" for Estimating Slant Range and Dive Angle

Gun camera film will be utilized in conjunction with the above instrument. The film can be assessed to determine the slant range and dive angle.

Mission Scoring Records

All missions will be scored on applicable Mission Scoring Record Forms. The following forms will be used.

AF Form 597, Mission Scoring Record (Aerial Gunnery)
AF Form 598, Mission Scoring Record (Low Angle Strafe)
AF Form 599, Mission Scoring Record (High Angle, Strafe, Glide and Dive Bombing and Rocket Firing)
AF Form 600, Mission Scoring Record (Skip Bombing)

The forms can be requisitioned through normal supply channels.

Digitized by Google

CHAPTER 7

air to air attack

In aerial gunnery, the basic problem is defined simply enough. It is to have the guns correctly pointed so that the projectiles will collide with the target. The solution of the problem, however, is not quite as simple. The effectiveness of a fighter pilot is measured by his ability to score hits on a target. A prime necessity in obtaining this result is a well-designed gunsight, properly harmonized with the guns and the aircraft. To secure the maximum number of hits on a target entails not only a knowledge of the limitations and capabilities of the fire control system, but also the ability to apply this knowledge through skillful gunnery performance.

From the pilot's point of view, his problems are mainly those of range, tracking, and maneuverability. By investigating the sources that tend to produce ineffective gunnery, the pilot can increase his proficiency as a gunner. Therefore, the chapter begins with an investigation of factors affecting the maximum effective range of a projectile and of factors affecting impact accuracy. This is followed by a discussion of the three components of the prediction angle — the lead angle, the gravity drop angle, and the trajectory shift angle. Maneuver limitations are explained in terms of isogee calculations. Next comes a detailed discussion of pursuit curves and the forces which act on the aircraft in those curves. The methods of firing with the fixed sight, electrically caged sight, fixed range computing sight, and radar ranging sight are set forth. These are followed by a brief discussion of the formulas and calculations required for determining mil lead in air-to-air problems. The chapter closes with information on tow targets and related equipment, ammunition painting, and painting of tow aircraft.

FACTORS AFFECTING THE MAXIMUM EFFECTIVE RANGE OF A PROJECTILE

The *maximum effective range* of a weapon is the greatest range at which accurate fire can be directed upon a target. Some of the factors affecting this range are dispersion, gravity drop, changes in bullet velocity, ranging, and pilot capability. These determinants are discussed below.

Dispersion

One of the primary causes of dispersion is the vibration of the aircraft and of the guns on their mounts. Variance in the headspace of the guns, condition of the gun barrels, and the external and internal ballistics which affect the projectile flight also contribute to the dispersion. The accepted Air Force standard for maximum dispersion with the caliber .50 machine gun is 75% within a 4-mil cone and 100% within an 8-mil cone.

Gravity Drop

Gravity drop is compensated for in the A-series sights when used in the computing function but it must be considered in fixed sighting at ranges over 1,000 feet. As the range doubles, the gravity drop in inches is approximately quadrupled. Even with sights which compute gravity drop, such as the A-1 and A-4, there is a limit on the range at which accurate correction can be made.

Digitized by Google

Changes in Bullet Velocity

Any change in the airspeed of the aircraft will produce a variation in the overall projectile velocity. The change in projectile velocity will produce a change in the bullet pattern. Also a change in the air resistance affecting the projectile will vary the effective range. To a large extent, the A-1 and A-4 sights compensate for both of these factors.

Ranging

Ranging inaccuracies are proportional to the ranges involved. For instance, when a target is ranged manually, accuracy improves greatly at shorter ranges. One of the main causes of ranging inaccuracy is the attempt to range a target when not at 0° angle-off. The wingspan has been set on the sight prior to firing, but only at 0° angle-off will the true sight picture be visible. Radar ranging has eliminated most of the problems associated with ranging and thus has increased the maximum effective range of the weapon being used.

Pilot Capability

The ability of the pilot to fly the aircraft and to aim properly at the same time is termed *pilot capability*. The many physical considerations — fatigue, mental confusion, and the like — affect the efficiency of a gunner and limit effective range.

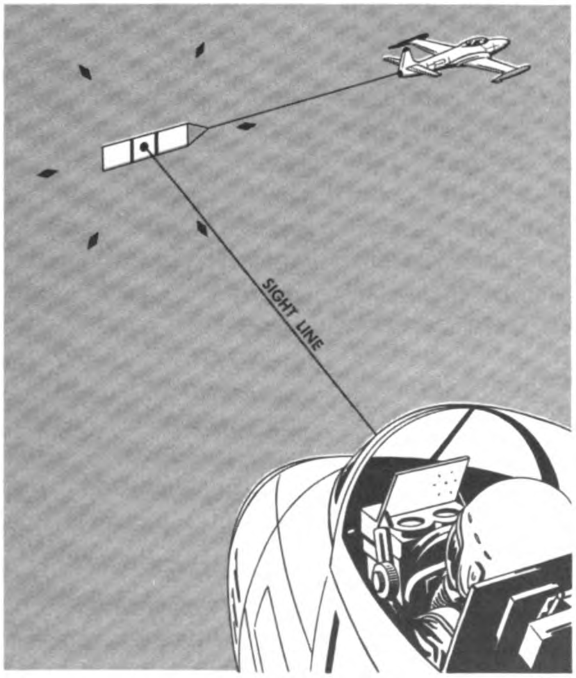

Ideal Sight Picture

FACTORS AFFECTING IMPACT ACCURACY

Despite the excellence of the equipment and the skill of the pilot, there are many reasons why 100% accuracy cannot be obtained.

No equipment can be designed to fulfill perfectly a wanted function — there must always be compromises for the sake of lightness, cheapness, ease of manufacture, and adaptability for use. Moreover, no pilot can ever be expected to perform in the ideal manner desired by the equipment designer. Because of these limitations, errors are inevitable in the solution of the gun fire problem. Fortunately, however, these errors may sometimes cancel one another out.

Tracking Inaccuracy

One purpose of the tracking is to match the rate of turn of the aircraft to the angular velocity of the line of sight. Since the solution of computing sight is based on the input of the angular velocity of the sight line, an error in tracking will produce a comparable error in the gunsight solution.

A second purpose of tracking is to establish a reference with the target from which the aircraft heading can be correctly offset by the amount of the computed prediction angle. Although this ideal condition of tracking must always be the goal, it is never perfectly realized. It is not within the realm of possibility for a pilot to hold the sight pipper correctly on the target throughout a pass. The simple reason is that before the pilot is able to sense that he is getting off target, there must actually occur an inaccuracy in tracking and the resulting incorrect sight solution. The tracking operation then becomes a matter of correcting for the inaccuracies as they become large enough to be discernible.

Insufficient tracking time is another source of tracking inaccuracy. The generally accepted solution time of the sight is one-half the flight time of the projectile to the target. Unless there exists a condition of smooth and ac-

Digitized by Google

curate tracking for this length of time, an incorrect solution will be computed by the sight.

Ranging Inaccuracy

The prediction angle is based on the two inputs of angular velocity of the line of sight and range information. Any error in the range input will produce a corresponding error in the sight solution.

Manual or stadiametric ranging naturally produces the greatest errors. Attempting to range a target when not directly astern usually accounts for large errors. The average pilot will have as much as 20% error when ranging a target manually.

The advantage of radar ranging is obvious. With well-calibrated equipment the error in ranging with radar can be narrowed to 75 feet. Although more skill is required to use the radar function of the sight, the greater accuracy warrants its use whenever possible.

Dispersion

One of the prevalent fallacies concerning ballistics is that dispersion of fire is entirely undesirable. An analysis of the results of dispersion reveals that a certain amount is desirable, if not imperative. With a reasonable dispersion of projectiles, the fighter pilot is controlling a cone of fire terminating in the center of impact rather than the trajectory of the projectiles. Because of the inherent inaccuracies in any fire control system, the center of impact cannot be expected to always be exactly on the target. Thus a reasonable amount of dispersion acts to increase the hit probability. That is, although dispersion may make 100% hits impossible, it may raise the actual hits from zero to a useful amount.

Random Equipment Errors

Fire control equipment will occasionally produce small errors due to backlash in gearing, residual friction in bearings, and changes in performance caused by variations in temperature, air pressure, and other physical qualities. Careful maintenance will insure some control over errors but for the most part they must be accepted as inherent in any fire control system. Errors from this source, however, are usually small.

Nonstandard Conditions

Any piece of equipment is manufactured to operate best under what may be considered to be standard conditions. Although the equipment may be used in a varying set of conditions, as conditions become nonstandard, errors will be more likely to result.

Fire control equipment is no exception. Examples of nonstandard conditions are varying temperature and varying air density.

While the A-1 and A-4 sights do compensate for change in air density, they do not compensate for changes in temperature. The decrease in temperature with increases in altitude affects muzzle velocity of the projectile. In some aircraft the ammunition is held at a constant temperature by heating units, but even with such equipment there will be some change in muzzle velocity. Therefore, if firing occurs at altitudes other than the one used as a standard there is a possibility of a certain amount of error in the fire control problem.

Theoretical Gunsight Error

The A-1 and the A-4 sights do not compute exactly the prediction angle required by a specific fire control problem but rather compute a mean value that best fits a variety of cases. The amount by which the computed value varies from the correct value is classed as a theoretical error.

The most common example of this theoretical gunsight error occurs when the A-1 sight is used in training on tow targets. The A-1 sight was designed for such speeds as would be encountered in fighter-versus-fighter operations. When the sight is used in training on tow targets, there is an appreciable gunsight error. The sight cannot be calibrated for both situations. Therefore when used on a banner target, the pipper does not indicate the center of impact.

The A-4 sight does have a compensation by which the pilot is able, by means of the TR HI LO selector to calibrate his sight more closely to different airspeed ratios.

The MIT R-20 and R-6 reports deal with projects evaluating the theoretical gunsight error in the A-4 and A-1 sights respectively.

Digitized by Google

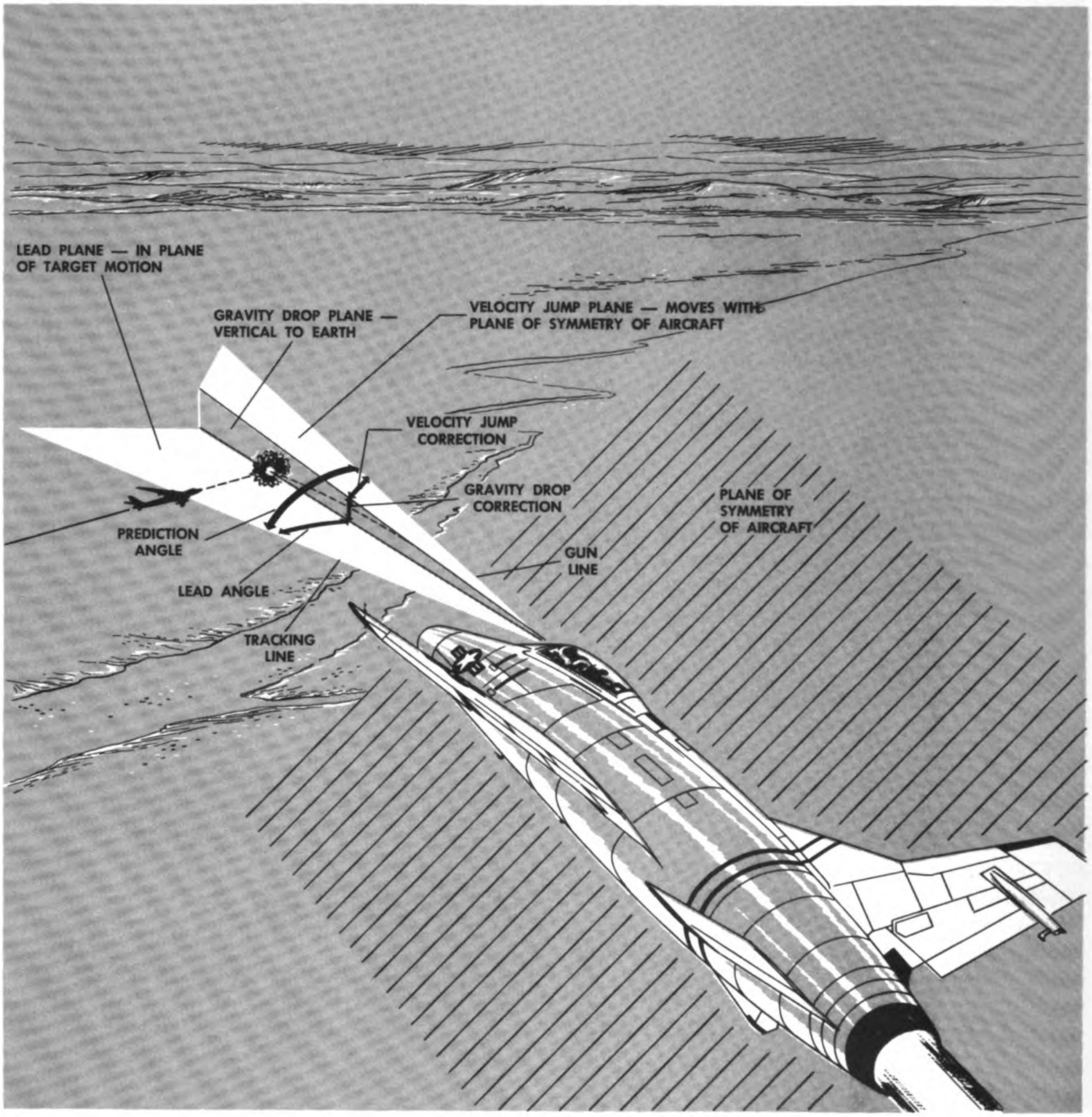

Prediction Angle

PREDICTION ANGLE

The prediction angle is the angle generated between the line of sight or tracking line and the gun line necessary to hit the target at its future position. The three components of the prediction angle are the lead angle, the gravity drop angle, and the trajectory shift angle (also termed the velocity jump angle). These three components are illustrated above.

Lead Angle

Whenever the line of sight must sweep out an angle to remain on the target, the guns must be pointed ahead of the target to secure hits. There is no motion of the line of sight either during stern chase or when the target and the attacker travel parallel courses at the same speed. In these two cases, therefore, no lead is required. In all other cases, the

Digitized by Google

guns must be given an angular offset or lead from the line of sight in order to secure hits. No matter how fast a bullet travels, it still needs a measurable time to reach the target after being fired. During this time the target travels forward. Thus it is necessary that the gun line "lead" the target. This angle is termed the *lead angle* and is diagrammed at right. It is in the plane of the target's motion. The lead angle is usually the largest component of the prediction angle.

So long as the average bullet velocity remains constant, the same angular lead will be correct for any specific target speed regardless of range within the limits of effective range. In other words, for a given angle-off, as the range decreases the mil or apparent lead will remain the same. However, the *linear lead* decreases with the decreasing range. The illustration below shows three different situations: 40° angle-off at 1,500-foot range, 40° angle-off at 1,000-foot range, and 40° angle-off at 500-foot range. Notice that the mil lead (1) is the same for all three situations but the linear lead (L) decreases.

Contrast the situation in the following diagram with three examples where the angles-off differ but the range remains the same in each case. As indicated in the illustration below, the mil lead decreases with a decrease in angle-off. The linear lead is the same in all three situations.

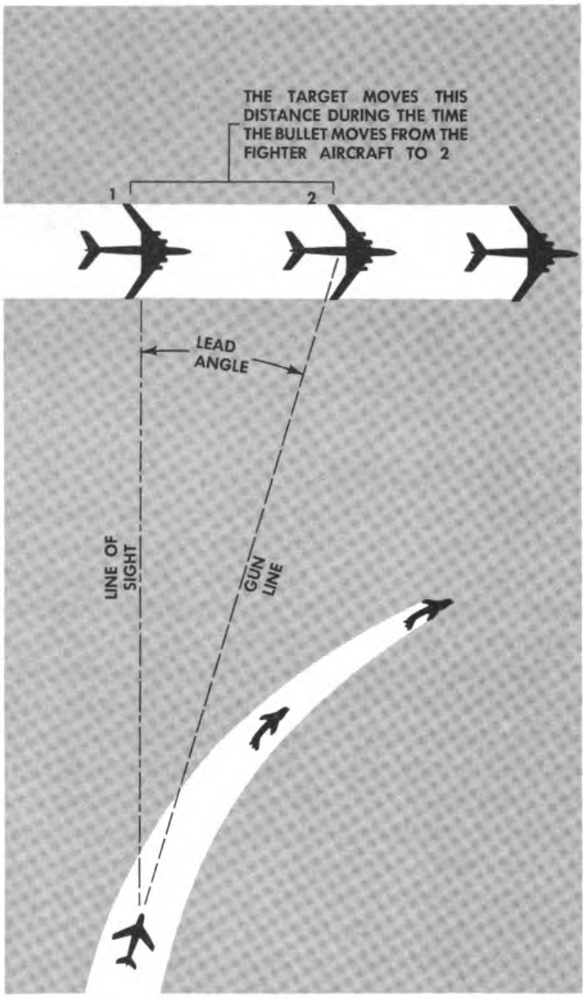

Lead Angle

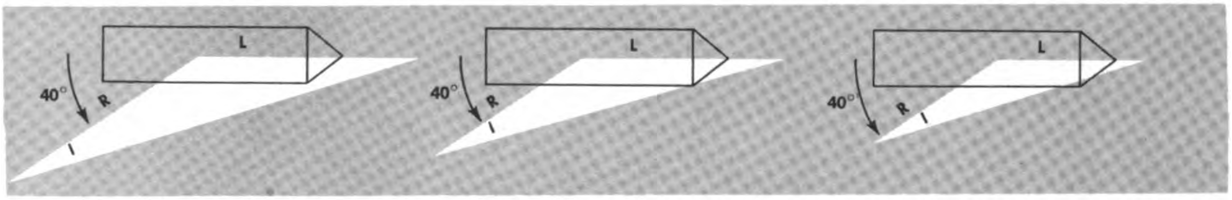

Comparison of Mil Lead (l) and Linear Lead (l) with Constant Angle-off and Decreasing Range

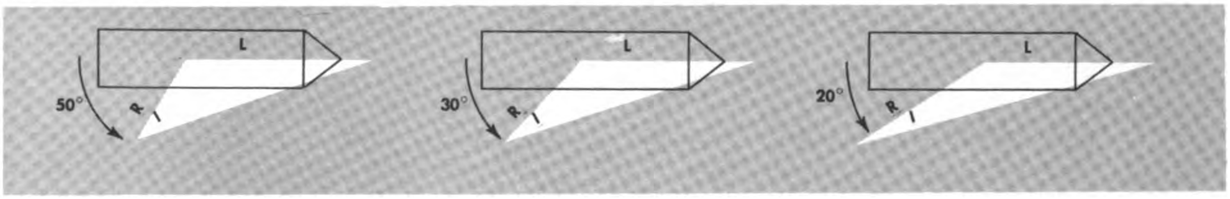

Comparison of Mil Lead (l) and Linear Lead (l) with Constant Range and Decreasing Angle off

Digitized by Google

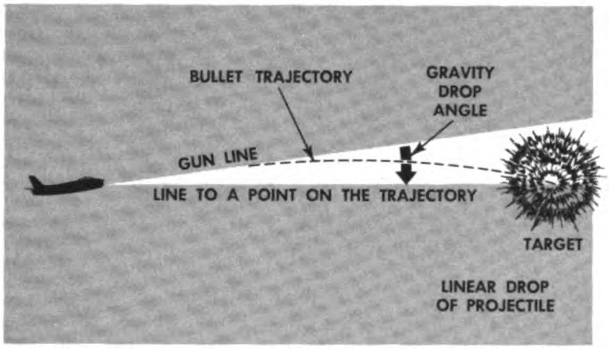

Gravity Drop Angle

Gravity Drop Angle

When any projectile is fired, it commences to fall under the pull of gravity the instant it is released. This effect is called gravity drop. It occurs only in a plane vertical to the earth, and its magnitude depends on the time of fall and the force of gravity. However, the projectile has a forward motion as well, due to the muzzle velocity. Because the projectile is moving forward at the same time it is falling, and because it falls at an ever-increasing rate, the resulting trajectory is a curved line. The amount of gravity drop is usually expressed in terms of the gravity drop angle. The correction for gravity drop is made by elevating the line of departure of the projectile through the gravity drop angle.

Trajectory Shift Angle

The third element of the predition angle is the trajectory shift angle.

If a gun is fired in exactly the direction in which the aircraft is moving, the projectile will start out along the gun line with a speed that is the sum of the velocity of the aircraft and the muzzle velocity. It frequently happens, however, that the gun line forms an angle with the flight path of the aircraft. In such a case the projectile does not start out along the gun line. It takes an intermediate path between the gun line and the flight path. This intermediate direction depends upon the muzzle velocity, the aircraft velocity, and the angles between their two directions. The two velocities produce a resultant velocity called the effective bore line. The angle from the fixed bore (or gun line) to the line of departure of the projectile is called the trajectory shift angle.

MANEUVER LIMITATIONS

Isogee Calculations

For every combination of target and fighter speed it is possible to draw circles tangent to the flight path of the target, which represent lines of equal *g* forces or *isogees.*

These circles or isogees represent the various

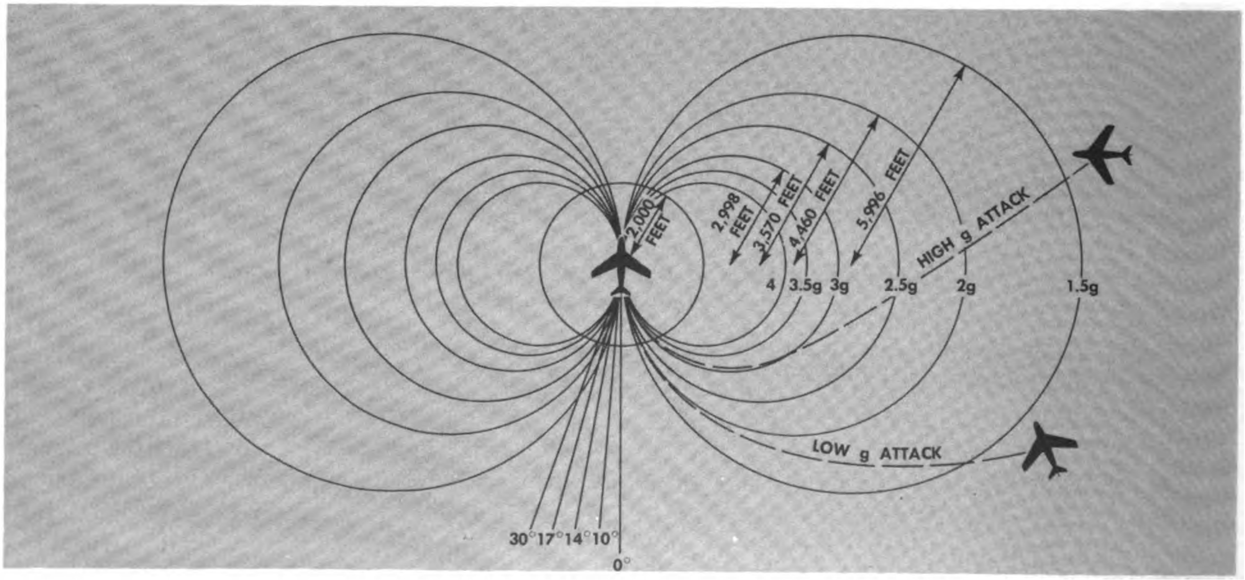

Isogee Diagram

Digitized by Google

distances and relative bearings at which an attacking aircraft can expect to encounter the stated number of *g*'s when tracking the target. The isogees are relative to and move along the flight path of the target. Thus they are always in the plane of attack, whether the attack is from overhead, high side, or head on.

It must be kept in mind that the isogee circles do not represent the flight path of the attacking aircraft. Rather, they represent the relative bearings and distances around the target at which the fighter must pull the stated number of *g*'s if he wishes to track.

The following formula can be used to calculate the radius of an isogee.

$$\text{Radius of isogee} = \frac{\text{fighter TAS (ft./sec.)} \times \text{target TAS (ft./sec.)}}{2 \times 32.2 \times N}$$

where N is the specific isogee—1, 2, 3, or 4 *g*, as the case may be. TAS is the true airspeed.

Isogee Patterns

The accompanying isogee diagram shows the isogees for 1.5, 2, 2.5, 3, 3.5, and 4 *g*'s with a target speed of 400 knots and a fighter speed of 500 knots. Around the target is a circle indicating the range of 2,000 feet — the range within which most fighter aircraft must fire to be effective. The straight lines indicate the various angles-off at 2,000 feet.

One of the most important conclusions from study of isogee patterns is the indication of the target's *area of vulnerability*. The area of vulnerability is that area bounded by the maximum *g* force that the fighter aircraft can attain and the maximum range of his weapons. Note in the diagram above that, with the high speed target and fast attacking aircraft, firing will have to be done at relatively low angles-off. The target is vulnerable only near his tail cone. The head-on attack is considered an impractical shot with the rate of closure involved — 1,521 feet per second in this case.

The radius of the isogee does not vary with altitude since it is only a function of target and fighter true airspeed. However, the maximum attainable *g* in the fighter decreases with altitude. Thus, the area of vulnerability is still further reduced with an increase in altitude.

Isogee diagrams, such as the one shown on the previous page, are of value in planning defensive action. In a defensive mission, it is advantageous to maintain as high a speed as is tactically possible. The radius of the isogee increases with an increase in either target or fighter speed. Thus, the area of vulnerability of a defensive aircraft will be reduced by maintaining a high speed. An aircraft attacking a fast-moving target will hit limiting *g* force at greater range and a greater angle-off.

If a target aircraft, undergoing attack, initiates a turn into the attacker, high *g* forces are rotated into the flight path of the attacking aircraft, for isogees are relative to and move with the target. Basically, the problem when under attack is to delay the turn or "break" until the attacking aircraft approaches its maximum effective range. Then a hard turn into the attacking aircraft should be initiated. When the attacking aircraft encounters maximum *g* force, the danger of the attack has been nullified. The turn of the target aircraft should be a maximum performance turn. It need only be of short duration — just long enough to rotate the high *g* forces into the flight path of the attacking aircraft.

PURSUIT CURVES

The evolution of an equation which best describes a curve of pursuit has its origin in a classical problem in mathematics dating back to the time of Leonardo da Vinci. At that time, the pursuit curve involved in the problem was the path described over the surface of the ground by a dog running to intercept its master who was walking in a straight line.

Types of Pursuit Curves

In a study of pursuit curves, it soon becomes apparent that a mathematical description of the flight path of an attacking aircraft entails a complex equation. For that reason, pursuit curves have been broken down into four types — the pure pursuit curve, the pure lead pursuit curve, the aerodynamic pure pursuit curve, and the aerodynamic lead

Digitized by Google

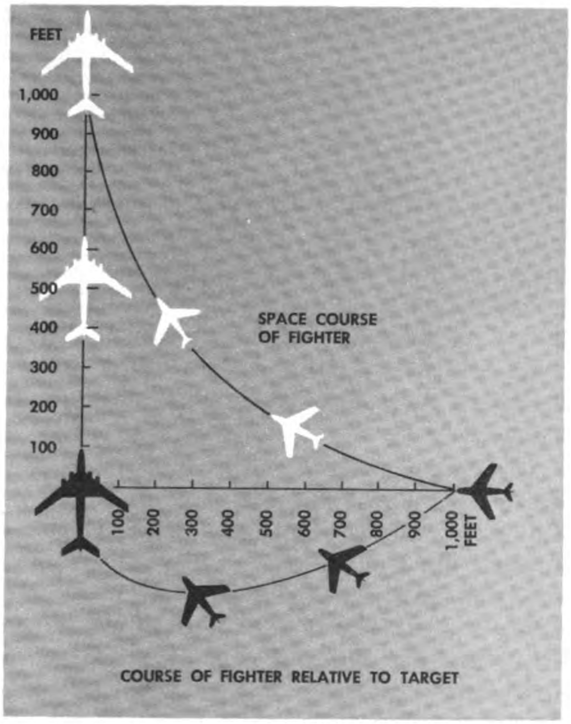

Two Frames of Reference in Aerial Gunnery

pursuit curve.

The *pure pursuit curve* is the simplest description of the flight path of an attacking aircraft on a curve of pursuit. It is merely a curved line terminating in the collision point continued to zero range. It is simply a function of the rate of closure on the target aircraft. In the pure pursuit curve, it is assumed that the guns are always pointed directly at the target and that there always exists a condition of 0° angle of attack on the attacking aircraft. Thus lead and *g* loads on the aircraft do not need to be considered.

The *pure lead pursuit curve* offers a more realistic approach to the problem. In such a pursuit curve, the gun line on the attacking aircraft is offset by the required amount determined by target motion. That is, the guns are pointed ahead of the target to compensate for the target velocity. Thus, *lead* is added to the simple pursuit curve.

The *aerodynamic pure pursuit curve* is the flight path of an attacking aircraft when the guns are assumed to be at all times pointed at the target aircraft and the flight path is actually determined by all aerodynamic considerations. In both of the previous descriptions of pursuit curves, the gun line was assumed to be coincident with the relative wind. Obviously, this is not the case when a fighter aircraft is flying a curved path. Therefore, considerations such as *lift*, *trajectory shift*, *gravity drop*, *g loading*, *air density* and all other aerodynamic factors enter into the description.

The *aerodynamic lead pursuit curve* is the most realistic approach to the problem. In this type of curve, the gun line is leading the target by the correct amount to secure hits, and the flight path of the attacking aircraft is actually determined by all aerodynamic considerations. It is apparent that the complexity of the problem in formulating the pursuit curve equation necessitates the logical progression from the simple pure pursuit curve to the aerodynamic lead pursuit curve.

Frames of Reference in Aerial Gunnery

Another factor which enters into the discussion of pursuit curves is the frame of reference. The diagram demonstrates that there are two viewpoints or frames of reference from which a pursuit curve can be considered. The two frames of reference can best be visualized by comparing an aerial gunnery pattern as observed from the ground and as observed from the aircraft. One is the space course, and the other is the course relative to the target.

SPACE COURSE. An observer on the ground looking up at an attack would see the movement of both the target and the attacking aircraft. In plotting a course from this viewpoint not only is rate of closure considered, but also the time element — that is, how far the target will move forward while the attacking aircraft is closing upon it. When the motion of the target is considered, the curved flight path of the attacking aircraft is said to be along the *space course*.

COURSE RELATIVE TO TARGET. On the other hand, a curve depicting the flight path of the fighter or attacking aircraft referenced from the target aircraft is slightly different than the curve plotted along the space course, because target motion has been left out of the problem.

Digitized by Google

Elementary Pursuit Curve Analysis

RATE OF TURN. In a curve of pursuit, the rate of turn of the attacking aircraft is determined by the range, angle-off, and target velocity. The rate of turn is diagrammed below and is expressed by this mathematical formula.

$$\text{Rate of turn} = \frac{V_t \text{ (sine of angle-off)}}{\text{range}}$$

V_t or target velocity is in *feet per second*, range is in *feet*, and rate of turn in *radians per second.*

On the basis of this formula and the accompanying diagram, it may be assumed that, in a curve of pursuit, if the angle-off is decreasing more rapidly than the range is decreasing, the rate of turn must, of necessity, also decrease. On the other hand, if range decreases more rapidly than the angle-off, a higher rate of turn will result.

RADIAL AND TOTAL g FORCES. Centrifugal force acts upon an aircraft beginning a turn. That is, an acceleration in the horizontal plane is added to the force of gravity. On a curve of pursuit, this acceleration is termed radial acceleration and in the diagram below is designated by the letter A. It can be computed when the velocity of the attacking aircraft (V_t), target velocity (V_t), angle-off, and range are known. It is expressed as follows:

$$A = \frac{(V_f)\ (V_t) \text{ sine of angle-off}}{(g) \text{ range}}$$

Total g's are the resultant of the centrifugal force A and the weight of the aircraft. In a turn, the total g's act upon the aircraft through the vertical axis of the aircraft.

The weight of the aircraft is equal to the acceleration of 1 g. Thus, from the parallelogram of forces demonstrated in the diagram above, a triangle may be evolved from which the *angle of bank* can be determined. This angle of bank is used to compute the total g forces.

In the above diagram, angle B + angle C = 90°, and angle B_1 + angle C = 90°. Therefore, angle B must be equal to angle B_1. Since the tangent of $B_1 = A$, the centrifugal force formula given on the following page can be used to find the angle of bank.

Once the value of the angle of bank is found, the total g force can be determined by

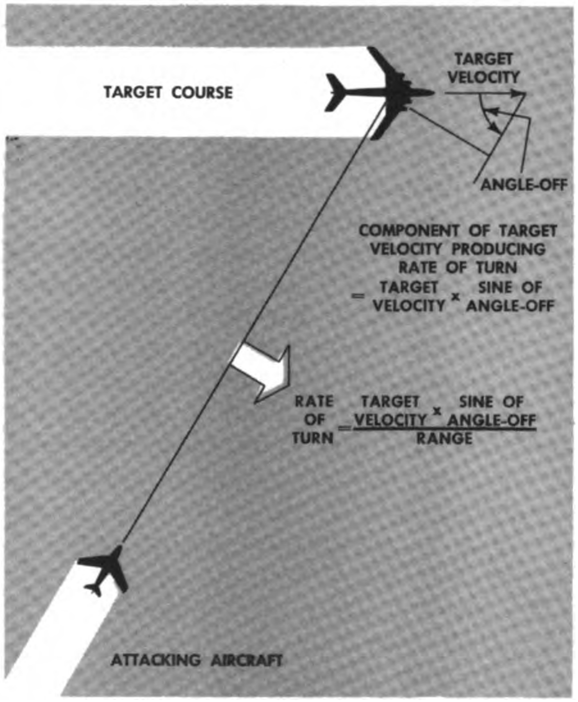

Rate of Turn in a Pursuit Curve

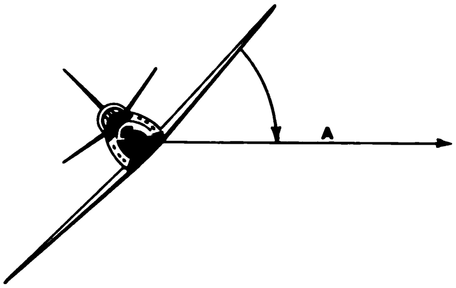

Centrifugal Force Vector

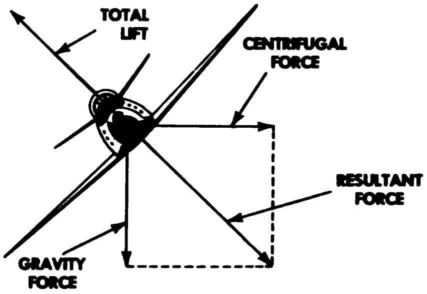

Forces Acting Upon an Aircraft in a Turn

Digitized by Google

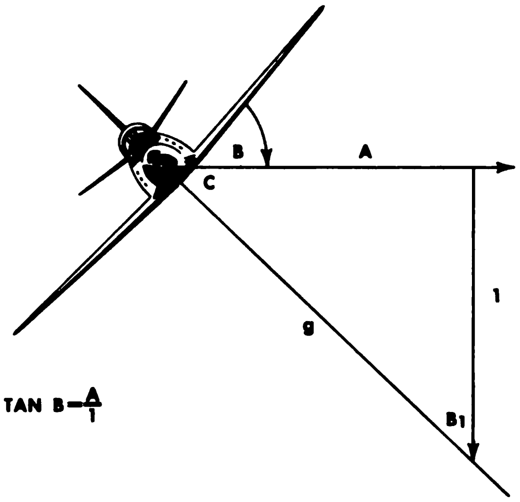

A — g force in the horizontal plane or radial acceleration

1 — Weight of 1 g

B — Angle of bank

B1 — Angle equal to angle of bank

g — Total g force

Solving of Vector of Forces of Aircraft in a Level Turn

using this formula:

$$\text{The cosine of } B_1 = \frac{1}{g}$$

When solved for g, the equation reads

$$g = \frac{1}{\text{cosine of } B_1}$$

Therefore, the total g force is equal to 1 divided by the cosine of the angle of bank.

This analysis is based on a level coordinated turn. In the case of a climbing or descending turn, the effective weight of the aircraft is not equal to the acceleration of 1 g. The extremes will be in a wing level climb, in which case the total g's will be 1 + A, and the wing level dive, in which case the total g's will be 1 − A.

Maximum *g* versus angle-off. On any curve of pursuit, there is one point which will be the maximum g force point. This is a function of the rate of change of the angle-off and the range. The aircraft may not be able to attain this g force — it is simply the highest g force that the attacking aircraft might encounter on that particular curve. This point can be determined for a given target fighter speed ratio using this formula:

$$\text{Cosine of angle of maximum } g = \frac{V_f}{2\,(V_t)}$$

The significance of this formula is that, once this angle-off of maximum g force is known, so long as target tracking is carried on at any angle-off *below* this point and not exceeding the limits of the aircraft, the tracking can continue all the way into the target.

The following table has been constructed using target-fighter speed ratios.

Target Speed Fighter Speed	Angle-off of Maximum g Force
0.5 or less	0.0°
0.6	33.6°
0.7	44.4°
0.8	51.3°
0.9	56.2°
1.0	60.0°

METHODS OF FIRING

This section deals with the methods of firing with the fixed sight, electrically caged sight, fixed range computing sight, and radar ranging sight.

Fixed Sight

In this day of computing sights, the fixed sight is used only as a last resort in aerial gunnery.

It should be remembered that the correct lead for an airborne target consists of lead for target motion, a gravity drop correction, and a trajectory shift correction. The lateral lead or lead for target motion is usually the largest component. The gravity drop correction seldom exceeds 5 mils. The trajectory shift correction is normally not in excess of 10 mils when within effective range, which will obviously be a much closer range with the fixed sight. Normally 1,200 feet is considered the maximum effective range when using the fixed sight. Therefore, if the pilot can devise a method of determining the approximate required lead for a given set of conditions, he will be prepared to take interim measures if the computing sight becomes inoperative.

The simplest approach to the problem is to determine the required lead for target motion or lateral lead for various angles-off and

Digitized by Google

ranges. If the pilot memorizes the lead requirement for 3 or 4 angles-off and 2 or 3 ranges, he will be well equipped for a fixed sighting situation when it arises.

For the solution of the lead required, use the lead for target motion formula and apply it to any situation.

$$\text{Mil lead for target motion} = \frac{V_t \text{ (sine of angle-off) } 1{,}000}{V_p}$$

V_t is target velocity in feet per second

V_p is projectile velocity in feet per second and is found by dividing present range by the time of flight of the projectile to that range. (Time of flight is determined by consulting the appropriate ballistics chart.)

The most common fixed sight method relies upon a 100-mil reticle. The A-1 manually caged sight reticle is of this value. The A-4 can be adjusted to this dimension by manually caging the sight and setting the wingspan at 60 feet. This results in a 50-mil radius in both sights under these conditions.

Below is a typical fixed sighting chart. The values were computed using the standard formula for mil lead for target motion.

V_t............200 m.p.h. IAS

V_f............350 m.p.h. IAS

Altitude.......15,000 feet

Range.........1,000 feet

Angle-Off	Sine	Mil Lead	Radii Lead (100-mil reticle)
90°	1.000	118.4	2.36
60°	0.866	102.5	2.05
50°	0.766	90.6	1.8
40°	0.642	76.1	1.52
30°	0.500	54.2	1.08
20°	0.342	40.4	0.8
15°	0.258	30.6	0.6

The mil value of the pipper does not change when the sight is used in the manually caged position — it is a constant 2-mil pipper. The pipper is the best index for range estimation. The method of estimating range, using the pipper as a reference, needs only a little practice until it becomes a valuable aid in fixed sight firing.

Since the lead for target motion formula includes only lateral lead, some consideration should be given to gravity drop. To correct for gravity drop, when using a fixed sight, place the pipper on the top of the target. Any correction larger than this will result in off-target tracking. This will invariably lead to an appreciable tracking error. Also remember that the radii of the sight reticle extend from the center of the pipper to the center of the circle or diamonds as the case may be.

Electrically Caged Sight

An electrically caged sight is a computing sight. However, it receives a fixed input for range information. In the A-1 sight the range input is 600 feet. In the A-4 sight, depressing the electrical cage button sends a range input of 850 feet into the computer. This is true regardless of whether the sight is in the radar function or the manual range function, so long as it is manually uncaged.

The normal use of the electrically caged sight in air-to-air firing is to stabilize the sight prior to radar tracking. It can be used to track a target, but unless the distance between the attacking aircraft and the target is the exact fixed range, either 600 feet or 850 feet as the case may be, the sight will compute an incorrect solution. The techniques used in firing with this sight are similar to those used with the fixed range computing or pegged range drum sight. The following paragraphs devoted to the techniques of firing with the fixed range computing sight may be used as well for the electrically caged sight.

Fixed Range Computing Sight

The techniques which will be described in the following paragraphs apply specifically to the aerial gunnery pattern using the standard 6- by 30-foot target. The overall techniques, however, will be applicable to any aerial gunnery situation, with minor changes, whenever this method of firing is to be used.

For fixed or pegged range firing, the A-1 or A-4 sight is so designed that, if the throttle is rotated to the minimum range position, the range input to the computer may be adjusted to 1,000-foot range. It remains there as long as the throttle is held in the full clockwise or "full down" position. In firing with

Digitized by Google

a locked range drum, the sight will give exact lead requirements *for only one range* during the attack.

With a fixed range computing gunsight, the pass must be planned so that smooth tracking is possible at the range the sight is computing for, at the maximum possible angle-off. If the pipper is put on the target at a long range, the sight will not generate sufficient lead. The fighter will trail the curve of pursuit until just before reaching the firing range. At this point, the turn must be accelerated in order to get on the pursuit curve and hold sufficient lead. This point on the curve of pursuit is usually near the point of maximum acceleration, and the result is called the "square corner." Acceleration is usually so great that the target cannot be tracked into firing range.

One method of avoiding the square corner is to manually range the sight full down at the beginning of the pass. Fly the pipper from slightly behind the target, through the target, and then ahead of the target. The additional lead required for the reversal range is usually 80 to 100 mils. Then, stop the pipper's forward motion and, as the firing range decreases, allow the pipper to slide back toward the target in order to arrive at the spot just ahead of the target bull's eye as the open fire range (1,000 feet) is reached. Hold the pipper in this one spot during the burst. Since the sight is computing a certain amount of lead, the proper amount of additional lead required at turn reversal and the rate that the pipper is let back to the target are both difficult to estimate. Inaccuracies in estimation normally result in a tracking error when the pilot attempts to stop the pipper.

A second method avoiding the square corner to initiate the attack from the perch position, manually range the sight as close to 2,400 feet as possible, and hold this range constant during the reversal to pick up the pursuit curve. As the pursuit curve is started, fly the pipper up from behind the target to a position just forward of the bull's eye, and hold it there until the pipper appears to be the same size as the width of the target. This occurs when the firing range is 3,000 feet. Then twist the throttle "full down," which will give the 1,000-foot range sensitivity to the sight. If the *g* force is held constant, the pipper will move forward until the additional mil lead required from 1,000-foot to the 2,400-foot range is reached. (The 600 feet from the 3,000-foot range to the 2,400-foot range is traveled by the aircraft as the throttle is twisted.)

As the firing range decreases, allow the pipper to move back toward the target at a rate which will bring the pipper to the target as the aircraft arrives at the open fire range. Check the pipper in its backward movement with the ultimate goal being to place it just in front of the bull's eye, and hold it there as the firing range is reached. It is important to hold the pipper in the one position for several firing missions so that accurated target assessment can be made.

As the angle-off decreases and the center of impact moves forward, the desired pattern consists of small bullet holes toward the rear of the target, with the holes progressively increasing in length to the front of the target.

The most common error in firing fixed range on a banner target is range estimation resulting in firing out of range. Accurate range estimation depends upon recognition of the instant the 2-mil pipper of the sight is equal in size to the 2-foot bull painted on the target, or is equal to one-third the width of the banner target. At this point, the attacking aircraft will be at 1,000-foot range.

Since the desired firing range is from 1,000 to 600 feet, firing should be commenced when the pipper is the same size as the 2-foot bull or when it covers one-third the target width. It takes a great deal of concentration to achieve accuracy in this method of range estimation. For example, the 2-mil pipper subtends a distance of 2 feet at 1,000-foot range, and a distance of 2 feet 8-4/5 inches at 1,200 feet. It is obvious that the human eye cannot detect these small differences in apparent size of the pipper while approaching the target. An error of ½ second in opening fire results in a range error of 200 feet which is enough to completely miss the target. Actual fire should begin at 1,000 feet and continue for ¾ to 1 second, covering a distance of approximately 400 feet of range. The

Digitized by Google

controlling factor on the length of the burst will be the pilot's ability to maintain the proper sight picture.

Drifting the pipper. The initial part of the "drift" method of fixed range firing is the same as for either method of fixed range firing.

As the 1,000-foot firing range is reached, open fire with the pipper in the front third of the target. Then allow pipper to drift straight back down the center of the target so as to arrive in the back third of the target at the same time as the firing burst is completed.

When the range drum is set at 1,000 feet by twisting the throttle to minimum range, the only range at which the sight is giving the correct solution is 1,000 feet. As the pipper drifts back, the sight is given an input which gradually compensates for the overlead condition existing at firing ranges under 1,000 feet. This tends to keep the center of impact of the rounds fired in the center of the target.

Radar Ranging Sight

When using the radar ranging feature of the A-1 and A-4 sights, begin with a thorough check of the radar set. After the sight is uncaged enroute to the firing area, obtain a lock-on upon as many different targets as possible in order to learn the maximum lock-on range and the break-lock range of the radar set. Match the span setting to the wingspan of the aircraft ahead of you in the flight and compare the reticle size to the aircraft size to be sure that the radar is feeding correct range information to the sight. Move the target aircraft slowly up to the top of the windscreen to determine what the width of the radar cone is. When coming into the gunnery pattern, reject targets until you are locked on the reflector of the tow target and once again check the lock-on range and the break-lock range. If the set locks on at 2,500 feet or more and holds the lock-on down to 800 feet or less, and if the target size and the reticle size match, the radar is operating and is calibrated as it should be.

Use the same perch or base leg position and speeds as for the fixed range drum firing. On the A-4, set the sight up on the Train position gunfire function, and rotate the twist grip to approximately 2,400-foot range. Bring the nose of the aircraft back until the target, but not the tow aircraft, is within the radar cone and hold it there until the lock-on light indicates a lock-on. (Checks made enroute to the firing range will have indicated approximately what range the lock-on should be expected.) When the lock-on occurs, it will be upon the target, because the tow aircraft is not in the radar cone. Fly the pipper up to the target and track steadily until an estimated range of 2,400 feet is reached. At this range, the pipper is approximately three-fourths the size of the target. At the 2,400-foot range, rotate the throttle grip into radar detent. Since range estimation is not very accurate at long ranges, the pipper will probably jump slightly forward or back. Do not make an immediate correction. Hesitate momentarily, and then smoothly fly the pipper into the target. A good rule for tracking corrections at long ranges when the sight's stiffness is low is to make half the correction indicated and let the pipper coast the next half. Track smoothly and avoid making abrupt corrections until the pipper approaches bull's-eye size. Dispersion is excessive beyond 1,200 feet. Fire until minimum range and angle-off are reached (600 feet and 15°), unless the radar breaks lock sooner. Check to see that break-lock occurs when the target passes out of the radar cone. If it does not, the radar was locked on the tow aircraft.

Note: In the event the radar checks indicate that the radar is not functioning properly, either of the two methods of fixed firing discussed previously may be used.

MIL LEAD IN THE AIR-TO-AIR PROBLEM

Appendix V gives the formulas and calculations required for determining mil lead in air-to-air problems.

TOW TARGETS AND RELATED EQUIPMENT

Two targets come in three types: banner, sleeve, and winged. The banner target is simply a fabric panel. The sleeve target is made of fabric and is shaped like a truncated cone. The throat, or small end (forward), is

Digitized by Google

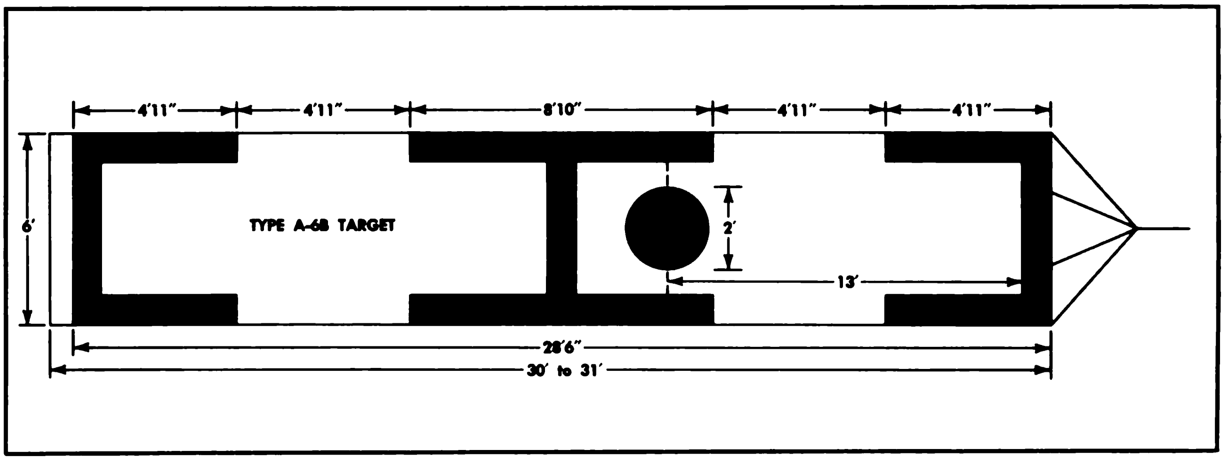

Markings on Type A6B Banner Target

open, but the breech end (rear) is rounded and closed. The winged target is made of metal and is shaped like a small aircraft.

> NOTE: Detailed information on tow targets and related equipment is contained in AFM 51-8.

Banner Target

The banner target that is in general use today throughout the Air Force is the type A-6B. It is a panel, 30 feet long and 6 feet wide, made of polyethylene cloth. The material is semielastic and will vary in length and width according to temperature. This fact must be taken into account in assessing gun camera film. The markings on the target are shown on this page.

Banner Target Carrier, Aero 1A

The Aero 1A carrier is used for aerial launching of a banner target. Use of the carrier instead of the drag takeoff is recommended

Aero 1A Carrier Mounted on Fighter Aircraft

Digitized by Google

Non-Rotating X-Band Spherical Reflector

when high temperatures or aircraft limitations would necessitate a long takeoff run. It should also be used when the range is distant, when a very high launch altitude is desired, or when short field takeoffs are necessary because of construction, high lines, or other obstructions during takeoff. As the repacking time of this carrier is approximately 3 hours, it would be desirable to have two carriers per tow aircraft.

The illustration below shows the carrier mounted in the bomb rack of a fighter aircraft. Complete details on the carrier and installation methods are given in AFM 51-8.

Sleeve and Winged Targets

The sleeve target and the winged target are not in general use in Air Force squadrons. For information pertaining to these targets, consult AFM 51-8.

Radar Reflectors

Radar reflectors are devices that serve as reflectors for air-to-air and ground-to-air radar gunnery systems. They are used in conjunction with the Type A-6B banner target. The three types presently in use include the nourotating, the rotating, and the M-10 or the Anning-type radar reflector.

NONROTATING TYPE. The Type E-1 X-band radar spherical reflector consists of three 10-inch disks intersecting at 90°. Two disks are solid, and the other is perforated. One disk has two towing holes in the form of ears protruding from its circumference, as shown above.

One or more of these reflectors may be placed in a series as a link between the bridle lines of the banner target and the safety two webbing assembly on the towline. In another arrangement, one or more may be attached to the spreader bar of the target.

ROTATING TYPE. The rotating X-band radar reflector assembly consists of a modified spherical reflector, Type E-1, which is attached to a framework by means of a swivel. The framework protects the reflector during drag-off. When airborne, the modified reflector rotates in the swivel. The rotation improves the reflectivity of the device. The assembly is shown on the next page.

M-10 TYPE. This reflector is an arrow-shaped device which is attached to a separate bar of the banner target as shown in the illustration below.

The device can be fabricated locally. The main body of the reflector is made of 25-gage

Digitized by Google

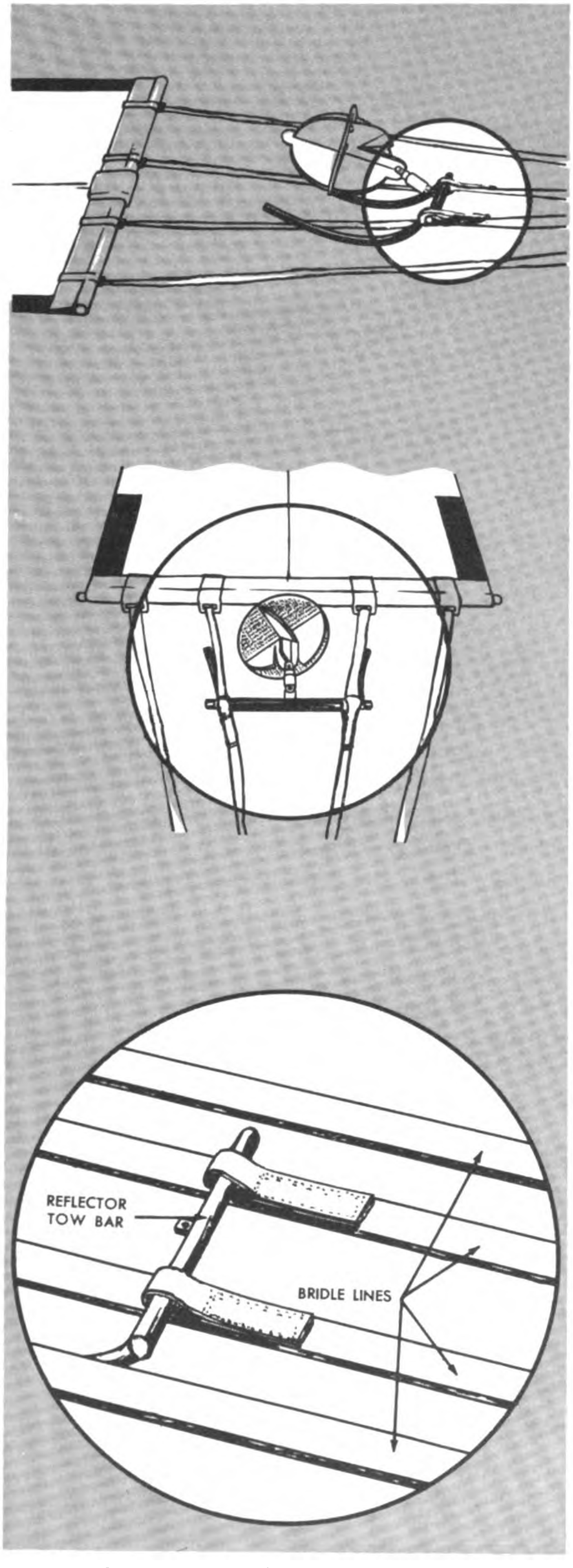

Rotating X Band Assembly Attached to Type A-6B Banner Target

galvanized sheet iron. The details of the fabrication are given in appendix X.

The skids protect the reflector during drag-off. They also reinforce the assembly so that the original shape is maintained when airborne.

Lock-on ranges. Listed below are the average lock-on ranges for the above reflectors used in conjunction with MA-3 fire control system that is maintained and calibrated for peak performance.

	Feet
Nonrotating reflector	3,200-3,600
Rotating reflector	3,400-3,800
M-10 reflector	3,600-4,000

Tow Latches, Tow Cables, and Related Equipment

The tow equipment for a particular tow target mission depends, of course, on the type of tow aircraft, tow target, flight pattern and altitude, and distance to gunnery range. Consult AFM 51-8 and appendix IX for detailed information on tow equipment.

AMMUNITION PAINTING

Bullets can be painted so that they will make colored holes in targets. The paint makes the holes easier to find. The holes in an aerial target are readily identified regardless of angle-off. If the target is scored against a white background the colors stand out clearly.

A separate color can be used by each pilot firing on a target. The individual scores can be determined by means of the colors.

Mixing the Paint

The biggest problem is to develop a paint hard enough to withstand handling, yet soft enough to mark clearly when passing through a target. A good method is to mix beeswax with bullet tipping paint (standard issue). The amounts of beeswax are as follows: 4 ounces for each gallon of black paint, 7 ounces to each gallon of purple, and 6 ounces to each gallon of red, green, orange, yellow, or blue.

The beeswax and the paint should be heated to the same temperature in a thermostatically

Digitized by Google

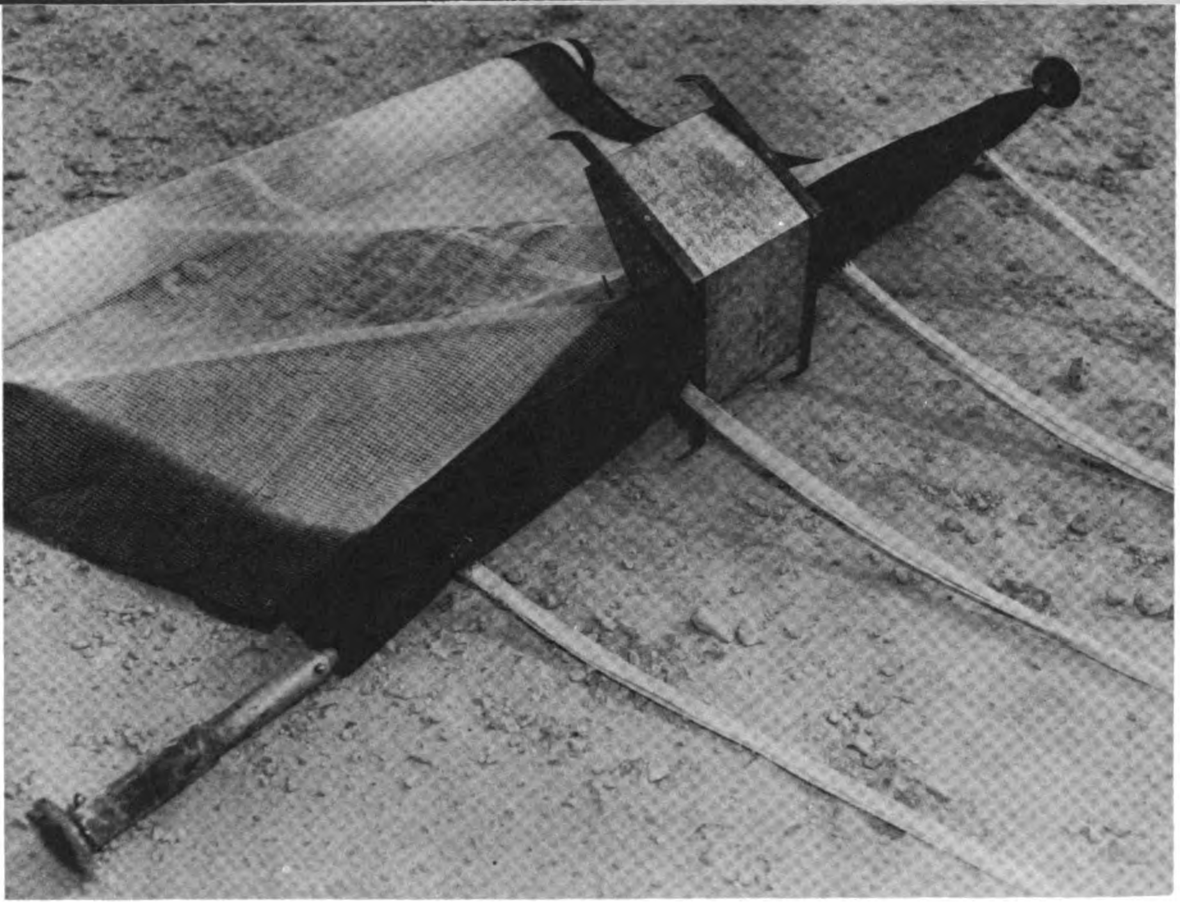

Radar Reflector M-10

controlled melting pot. When pouring the wax into the paint, stir constantly. After the mixture has cooled, add paint thinner until desired consistency is obtained.

The wax melting pot mentioned above may be requisitioned through normal supply channels. Listed below is the nomenclature:

Pot, Wax, Melting
Type 899WV
Voltage 110 AC
Serial Number 1931

Dipping the Ammunition

Assemble the ammunition in belts of convenient lengths (90 or 100 rounds) and make a tight coil of each belt. Pour the paint mixture into a shallow pan. Aline the bullets by placing a coil (projectile end down) on a flat surface and tapping gently. Dip the projectile end of the coiled ammo into the pan of coloring paint. Be sure the paint is applied only to the tapered portion of the projectile. Place the coil of ammo, still projectile end down, on a drain surface to allow the excess paint to drain off. The fiberboard squares which come packed in ammo boxes make good drainboards. Allow the painted ammo to dry for 6 hours before using. If the painted ammo is not required for immediate use, it can be repacked in the boxes with little damage to the painted tips. The painted ammunition should be stored in a dry warm place away from munitions, etc. It should never be exposed to the sun for long periods of time.

Painted ammunition should be used in a reasonable length of time, otherwise its marking qualities will be greatly reduced.

Substitute for Bullet Tipping Paint

Lithograph ink may be used instead of bullet tipping paint. One pound of ink should be mixed thoroughly with 9 pints of turpentine. This mixture should be added to 4 pounds of melted beeswax and stirred vigorously. Allow this mixture to set for approximately 6 hours before using.

Lithographic ink may also be mixed with bullet tipping paint to get additional distinctive colors. It is used mainly with yellow and orange paints.

Digitized by Google

PAINTING OF TOW AIRCRAFT

Because of the difficulty of spotting tow aircraft, especially at the higher altitudes (25,000 feet and above), it is recommended that tow aircraft be painted international orange enamel paint (Spec. No. TT-E-489). This enamel does not fade as quickly as other paints when exposed to weather. For best results all of the upper surfaces of the tow aircraft should be painted, as shown below.

T-33 Painted for Use as Tow Aircraft

Digitized by Google

CHAPTER 8

air-to-ground attack

Originally the fighter aircraft was known as the pursuit, and its role was to chase and destroy enemy fighters and bombers. Its secondary role was to defend itself against the enemy. All this led to the development of sights and weapons and to their installation in these pursuit aircraft.

The Germans were unofficially credited with being the first to use the aircraft as ground attack weapons. Early in 1916 Allied troops were strafed in their trenches on the Ypres sector of the Western Front. A year later, during the German retreat to the Hindenburg Line, Allied pilots inflicted severe losses on enemy troops and transport with aircraft-mounted machine guns. The Royal Flying Corps adopted the hitherto unheard of tactics of flying well behind the German lines to attack targets. This was the first use of aircraft for interdiction.

At this time both sides did a considerable amount of experimenting with the carrying and delivering of small bombs by the pursuit aircraft. These were, in reality, the first fighter bombers.

The French went one stage further and adapted small rockets and launchers for fitting to the struts of their pursuit aircraft. Unfortunately, little or no information is available as to the effectiveness and accuracy obtained with them.

With the ending of the hostilities in 1918, development of weapons for fighter aircraft slowed down. Except for some work done by the Nazis, it was not until World War II that any research was carried out into the possibilities and capabilities of the fighter bomber. Events in World War II saw the fighter bomber develop into a weapon which made possible such invasions as Sicily, Italy, Europe, Saipan, and the Philippines.

In the Korean Action, the fighter aircraft of the United Nations Air Forces were divided into one-third interceptor and two-thirds ground-attack forces. This showed that it is virtually impossible to carry out a successful ground campaign without the aid of the fighter bomber.

This chapter discusses the following types of air-to-ground attack: low level bombing, low angle strafing, dive bombing, high angle strafing, and rocket firing.

SKIP BOMBING

Low level bombing, low angle bombing, or skip bombing, whichever it is called, is the most accurate method of delivering a bomb to a target. This is true only if the object to be bombed has some height and is not an area target. The target height is quite important, as it allows the pilot a certain amount of latitude with his release point, a

Digitized by Google

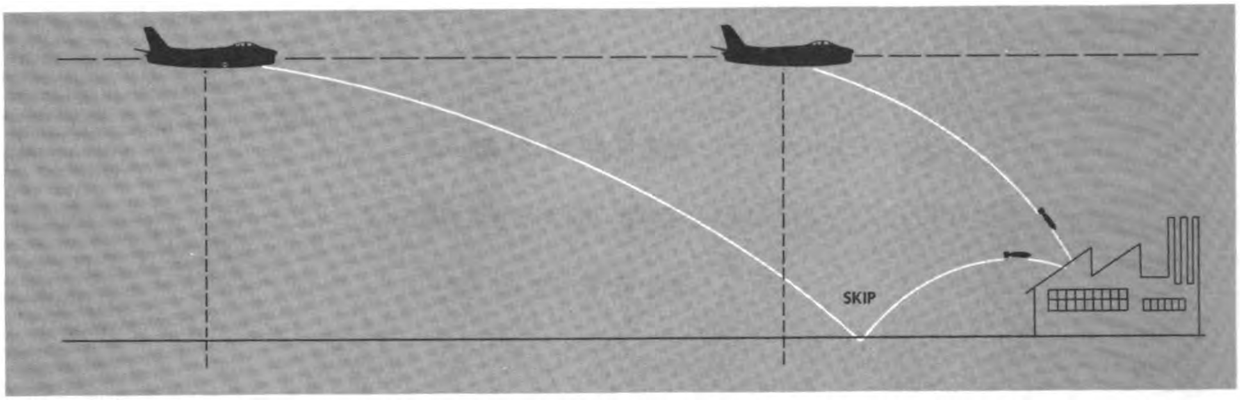

Limits of Release in Skip Bombing

necessity when flying at high speed near the ground. The limits of release are shown in the drawing above.

Low level bombing is extremely accurate against a pinpoint target. This was demonstrated in the breaching of the Amiens Prison wall by Royal Air Force Mosquitoes in 1944, for the release of French political prisoners.

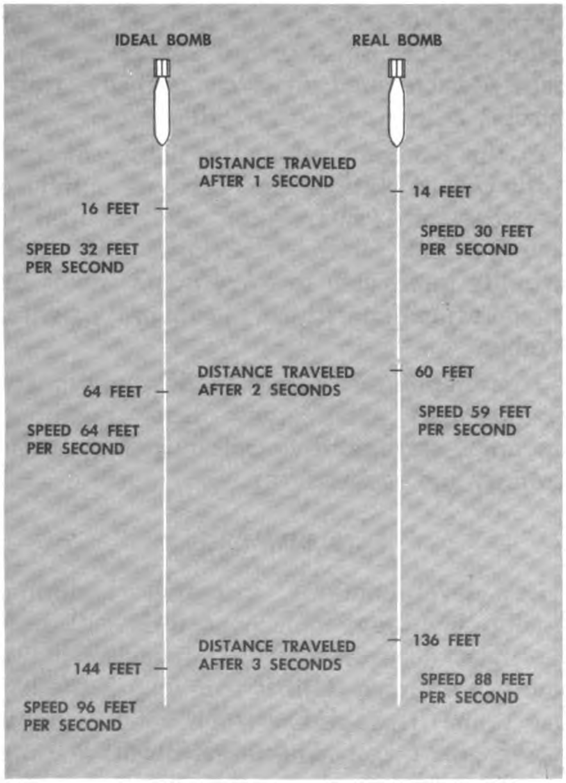

Comparison of Ideal Bomb and Real Bomb

Forces Acting Upon the Bomb

When a bomb is released from an aircraft it has but one velocity — the speed and direction of the aircraft. However, the moment the bomb leaves its rack a second force begins to act upon it — gravitational attraction. Thus the bomb begins to accelerate vertically toward the earth under this gravitational attraction. This vertical acceleration is 32.2 ft./sec./sec. For all bombing theory, be it low level, dive, or high level bombing, the ballistic expert begins his computations by using an "ideal bomb," an imaginary projectile. The ideal bomb is not affected by air resistance. However, with figures obtained from calculations based on the use of this ideal bomb, it is a simple matter to compute sight settings for a real bomb.

A comparison between the ideal bomb and the real bomb is shown in the illustration at the left. Both projectiles are assumed to be dropped simultaneously from a stationary platform in space.

Both bombs begin to accelerate vertically due to the earth's gravitational pull. As the ideal bomb is unaffected by air resistance, its acceleration is uniform. Therefore for every second of fall its speed will increase by 32.2 ft./sec. The real bomb is also subjected to a vertical acceleration of 32.2 ft./sec./sec., but in addition it is also affected by air resistance. So for every second of fall its speed does not increase by 32.2 ft./sec., but by some slightly lesser figure. This is because a slight amount of the acceleration is lost due to the viscosity of the air, known as air resistance.

Digitized by Google

Need for Sight Depression

As explained above, a bomb released from an aircraft has the velocity of the aircraft, and also, at the moment of release it commences to accelerate toward the earth due to gravitational attraction. Thus a bomb released from an aircraft in level flight will hit the ground at some point below the flight path. A sight in the cockpit would have to be depressed through a calculated angle in order to predict this point of impact. This angular sight depression is dependent upon straight and level flight, airspeed, altitude, and any variation in these three factors will affect the accuracy of the bombing.

Effect of Dive Angle on Skip Bombing Accuracy

The sight depression for low level bombing is calculated on the assumption that the aircraft is flying straight and level at release. Any deviation from this will result in an error. This may best be understood by studying the difference in the sight depressions required by an aircraft bombing straight and level and another in a vertical dive, as shown in the illustration above.

The aircraft flying straight and level requires maximum depression angle while the aircraft in the vertical dive requires no sight depression. Thus at any intermediate dive angle between 0° and 90° the required depression will decrease as the dive angle increases. Therefore, if the sight depression is calculated for a dive angle of 0°, or straight and level flight, the aircraft is then placed in a slight dive, the sight depression being used will be too great for the particular flight conditions. Depression is another way of saying lead. In this particular case the pilot is using too much depression, or he is "overleading." Consequently, the bomb will overshoot the target. This overshoot error increases as the angle of dive increases.

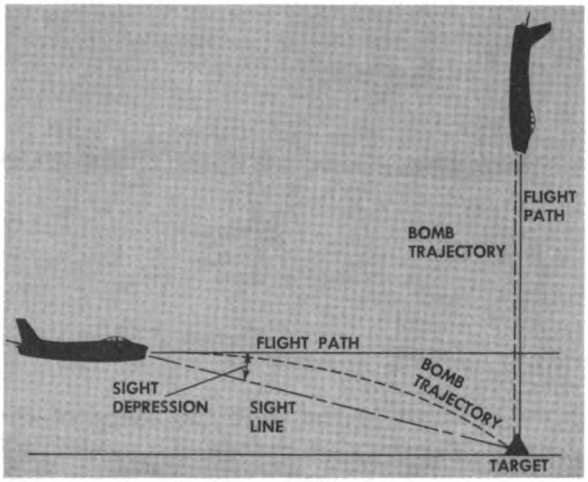

Effect of Dive Angle on Skip Bombing

Effect of Airspeed on Skip Bombing Accuracy

The sight depression is calculated for one particular airspeed. If this airspeed is changed, the trajectory of the bomb will be changed because at the moment of release the only velocity that the bomb has is aircraft velocity. The illustration below shows that a change in the speed of the aircraft at release changes the trajectory and the forward travel of the bomb and, in consequence, alters the sight depression.

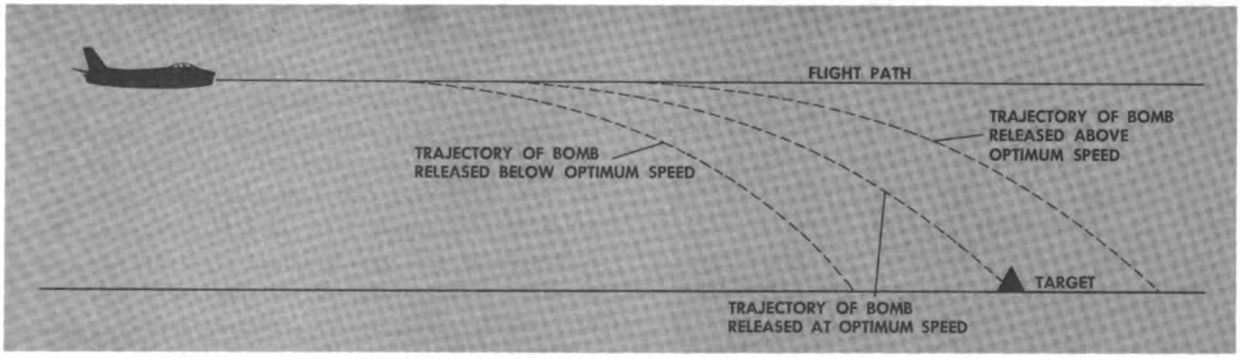

Effect of Airspeed on Skip Bombing

Digitized by Google

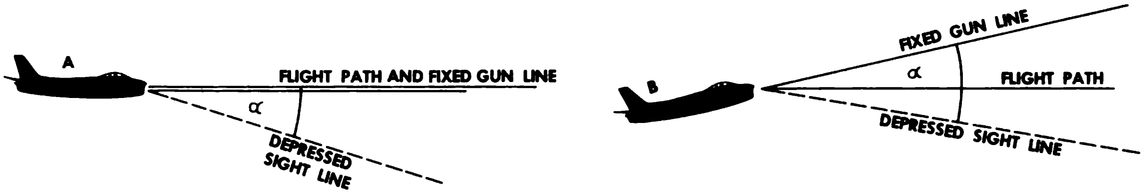

Change of Effective Depression with Change of Airspeed

In addition to changing the shape of the bomb's trajectory, a change of airspeed will also change the aircraft's angle of attack from that used for the sight depression calculation. An increase in speed over that used for the calculation will result in a decrease in the angle of attack and, conversely, a decrease in speed will result in an increase in angle of ack. It has already been seen that at release the bomb has the velocity of the aircraft; therefore at release its trajectory is directly along the aircraft's flight path. Providing the aircraft maintains the same flight path, any change in angle of attack will not affect the initial trajectory of the bomb. It will always be along the flight path. Any change of angle of attack will alter the "effective depression" that the pilot is using from the cockpit, as shown above.

When speed is increased and angle of attack is decreased, the "effective depression" is increased, or the lead is increased. This, plus the error caused by the change in shape of the bomb's trajectory will give an overshoot. Conversely, a decrease in speed will result in an undershoot.

Effect of Altitude on Skip Bombing Accuracy

The sight depression is calculated for one particular altitude, and variation of this will cause an error. The next illustration shows a bomb being dropped from three different altitudes at the same speed and in straight and level flight.

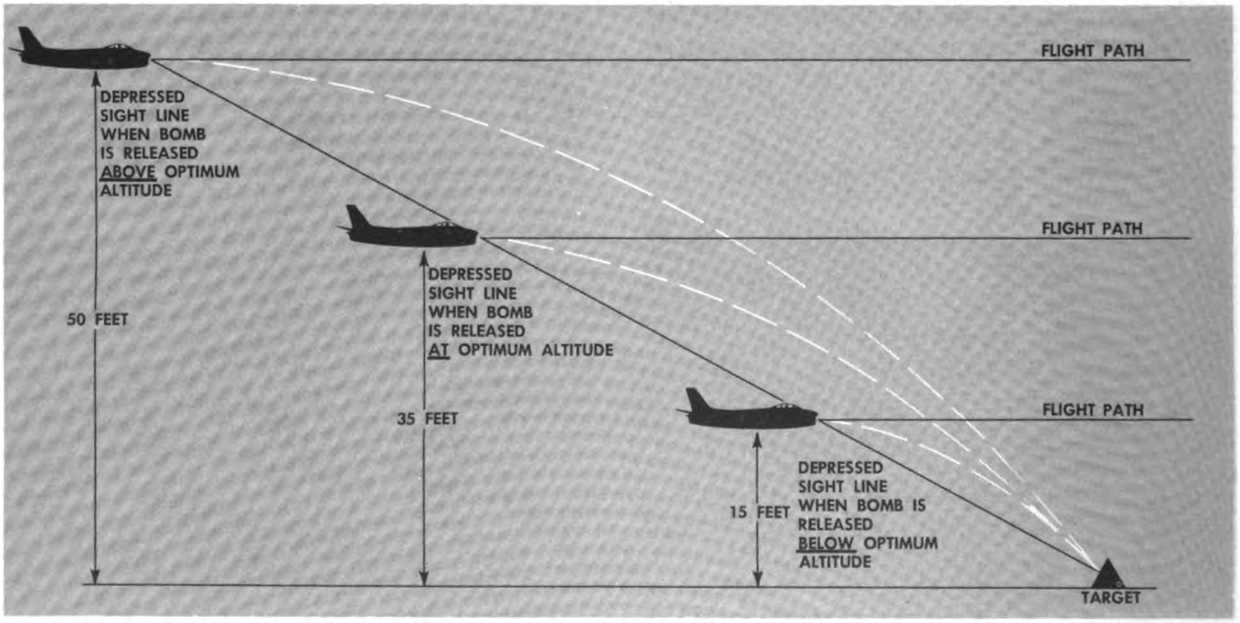

Effect of Altitude on Skip Bombing

Digitized by Google

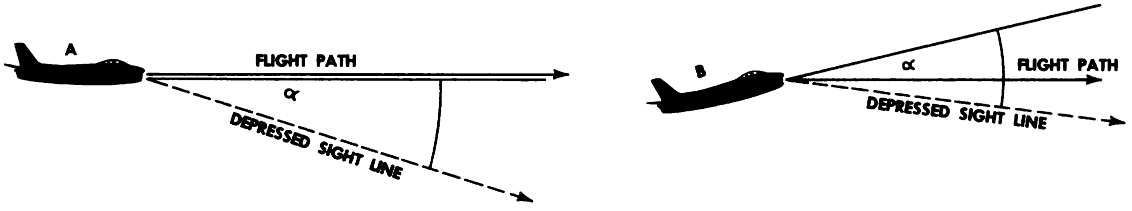

AIRCRAFT UNDER 1g CONDITION

AIRCRAFT UNDER 2g CONDITION

Effect of a g Loading on Effective Depression

It can be seen that as altitude increases the sight depression would necessarily have to increase for the same airspeed and straight and level flight. Therefore if a pilot makes an attack at a higher altitude than the one for which the sight depression was calculated he should really use more depression or lead. In such an attack, therefore, he is underleading, which will result in the bomb undershooting. Conversely, if the attack is made at a lower altitude than that for the calculated sight depression, the bomb will overshoot.

Effect of g Loading on Skip Bombing Accuracy

An increase in the loading or what is commonly termed "pulling *g*'s" on an aircraft requires that the lift derived from the wing be increased. This increase of lift can be accomplished in two ways: an increase of speed, or an increase in the angle of attack of the airfoil to the relative airflow. The latter is the method accomplished by the pilot automatically.

When the angle of attack of the aircraft is increased due to an increase in the *g* load, the angle between the depressed sight line and the flight path is decreased. This is shown in the above illustration. It has already been seen that the trajectory of the bomb at release is along the aircraft's flight path. Therefore if aircraft B is maintaining straight and level flight at release and the same airspeed as aircraft A (but under a 2*g* loading) the trajectory of the bomb will be the same and the required sight depression relative to the flight path will be unaltered. Due to the increase in angle of attack aircraft B caused by the 2*g* condition is in effect using less depression or lead relative to the flight path. Aircraft B is underleading, and therefore, the bomb will undershoot providing the pipper is on the target at the time of release. The reverse is true if a negative 2*g* loading is applied to the aircraft at bomb release.

Effect of Skid on Skip Bombing Accuracy

If an aircraft is flying in a skid condition as shown below, its flight path and sight line are not coincident.

The bomb released from that aircraft has but one velocity — the speed and direction of the aircraft. Thus, the bomb will continue along the aircraft's flight path in addition to accelerating toward the earth under the influence of gravity. Therefore, if a pilot is applying right rudder in order to maintain the sight on the target, or in other words, is flying with left skid, the bomb will fall to the left of the target. It can be seen that the bomb's path will be affected by the slightest amount of skid, and in consequence, skillful flying is necessary while approaching the target and releasing the bomb.

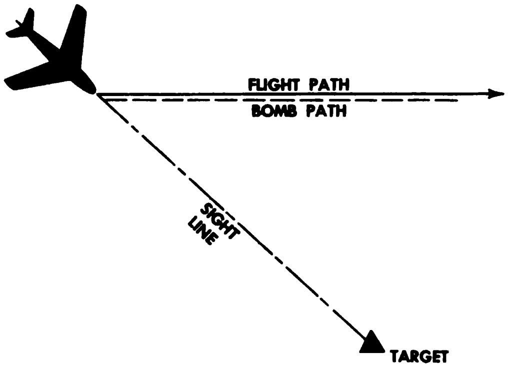

Effect of Skid on Skip Bombing

Digitized by Google

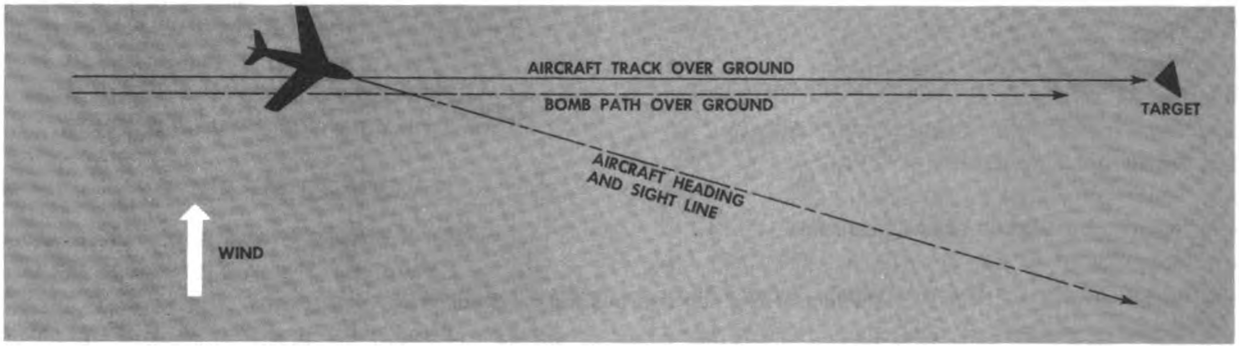

Skip Bombing in a Cross Wind

Effect of Wind and Target Speed on Skip Bombing Accuracy

Probably the most disturbing factors that a pilot will have to contend with when making an attack against a ground target are wind effect and target movement, or a combination of both. Wind effect and target movement present exactly the same problems to the pilot. It is an apparent drift of the target across the sight line. The pilot deals with the two problems in exactly the same manner.

A bomb dropped in a cross wind will drift downward. The distance it will drift will be related to its time of fall and the wind speed. Consequently, in order to hit a target with a bomb in a wind, the pilot will have to aim into the wind this drift distance. In exactly the same manner the pilot attacking a moving target will have to aim ahead of the target. This distance will be equivalent to the product of the time of fall of the bomb and the target speed.

The rule of thumb for determining this distance or angular sight deflection is to allow 2 mils per m.p.h., of target or wind speed. Thus, if bombing a target traveling at 30 m.p.h. the pilot will aim 60 mils ahead of the target. If attacking a stationary target in a 15 m.p.h. 90° cross wind, the pilot will aim 30 mils into the wind, providing that no correction has been applied to the aircraft. Therefore, the aircraft is drifting downwind at a rate of 15 m.p.h.

There are two methods open for the pilot to use in laying off this correction or lead into the wind or ahead of the moving target, the "bank" method and the "drift" method.

"Bank" Method of Correction

The pilot making a bombing run at a target with a 90° cross wind, or with a target moving at 90° to his line of sight will be presented with the same problem. In both cases the target will appear to move across the sight line. However, in a cross wind it is actually the aircraft that is drifting. In order to keep the sight on the target, the pilot can fly a correctly banked turn. With a high wind speed or target speed, this angle of bank could prove to be dangerous when the pilot is concentrating on a sight picture and also flying the aircraft close to the ground at high speed. In addition, the pilot still has to estimate the wind or target speed and then, for this speed, must further estimate this correction into wind or ahead of the target. The stronger the wind velocity, or the higher the target speed, the more difficult this method of correction becomes.

"Drift" Method of Correction

An aircraft flying in a 90° cross wind to make good a track 90° to the target on the ground will appear to be "crabbing." A bomb dropped from an aircraft will continue its trajectory along this track or "crab," as shown above.

The above statement is not quite 100% true. An ideal bomb would follow the same track over the ground, but a real bomb would drift very slightly farther downwind in the later stages of its fall. This actual amount of drift is extremely small at the altitudes normally used for low level bombing, and so it can be ignored.

Digitized by Google

Thus, if the aircraft is made to track over the target in a cross wind, the bomb's trajectory will also track over the target, and provided the bomb is released at the correct position, it will hit the target. In order to make the aircraft track over the target, the pilot automatically places the sight line into wind from the target, as in the drawing. This amount of lead is the necessary correction for hitting the target in the particular cross wind.

The advantages of the drift method as opposed to the bank system of wind correction are:

a. The aircraft is not in a bank while flying over the ground at high speed, with the pilot devoting a lot of his attention to a sight picture.

b. By making the aircraft track over the target the pilot has to place the sight up wind, and in so doing he automatically lays off the wind correction.

c. The wind velocity does not have to be known to apply the correction.

d. The correction does not have to be estimated.

Position of Bombs on Aircraft

Invariably a fighter aircraft has wing racks for the carrying of bombs. If the bombs are to be released singly, some allowance must be made for the distance between the bomb rack and the aircraft center line. When bombs are dropped from the left wing rack, an allowance must be made to the right of the target when aiming. A correction to the left must be made when dropping from the right wing rack. This compensation is shown below.

LOW ANGLE STRAFING

Low angle strafing is the most accurate method of delivering a gun attack against a target, especially a pinpoint target. This type of attack obviously has its limitations in combat. It places the attacking aircraft in the very vulnerable position of being at close range to enemy ground fire at a comparatively shallow dive angle. Low angle strafing may be defined as that type of attack where the dive angle falls between 10° and 30°.

The accuracy of a low angle strafing attack is affected by dive angle, slant range, airspeed, *g* loading, and skid. These factors and their effect on the attack will be dealt with individually.

Effect of Dive Angle

The following discussion of the effect of dive angle deals with the effective weight of the aircraft, bullet drop allowance, speed, recovery, and firing range, and target presentation.

Effective weight. Consider an aircraft in straight and level flight. It has four forces acting upon it, as shown in the drawing. Thrust is equal to drag and lift is equal to weight.

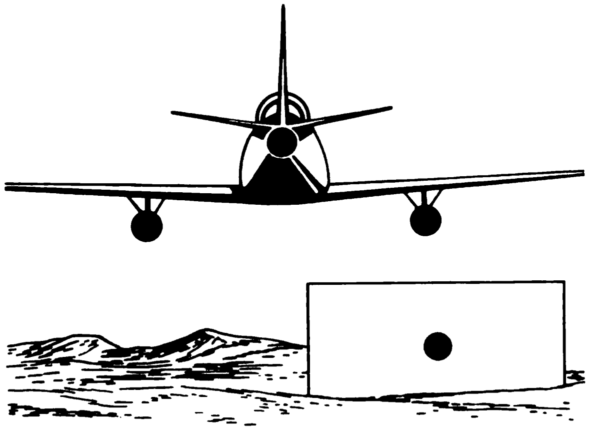

Compensation for Wing Bomb Racks

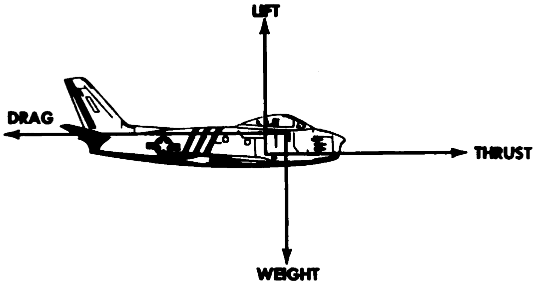

Forces Acting on an Aircraft in Straight and Level Flight

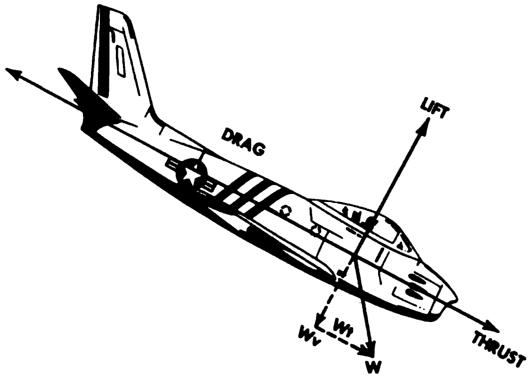

Forces Acting on an Aircraft in a Dive

The forces acting on the same aircraft in a dive are shown in the above drawing. The weight of the aircraft is unchanged and acts vertically; lift acts perpendicular to the relative air flow. The weight of the aircraft can be resolved into two components: Wv, which acts perpendicular to the relative airflow and opposes lift; and Wt, which acts parallel to the thrust. It can be seen that Wv is less than Wt. The lift required from the wing is equal and opposite to Wv. It is obvious that less lift is required from a wing in a dive.

The lift from a wing is normally decreased by one of the combination of two methods: decreasing the speed or decreasing the angle of attack. Under combat conditions a decrease of speed is most undesirable, Therefore, the only means left of decreasing the lift is to decrease the angle of attack. This change of angle of attack alters the impact point of the bullets relative to the sight line, as shown in the drawing below.

Consider the gun bore line and the fuselage reference line to be coincident, and in straight and level flight at harmonized speed the fuselage reference line is along the flight path. It can be seen that with the aircraft in a dive the point of impact of the bullets at harmonized range will be above the sight line, resulting in an overshoot.

Bullet drop allowance. An aircraft is harmonized in a straight and level flight condition, and the sight line indicates where the bullets will hit at harmonized range. The sight is either depressed to intersect the bullet trajectory or the guns are elevated to fire into the sight line. Perhaps a combination of both is used. Whichever system is used, the bullet drop for the harmonization

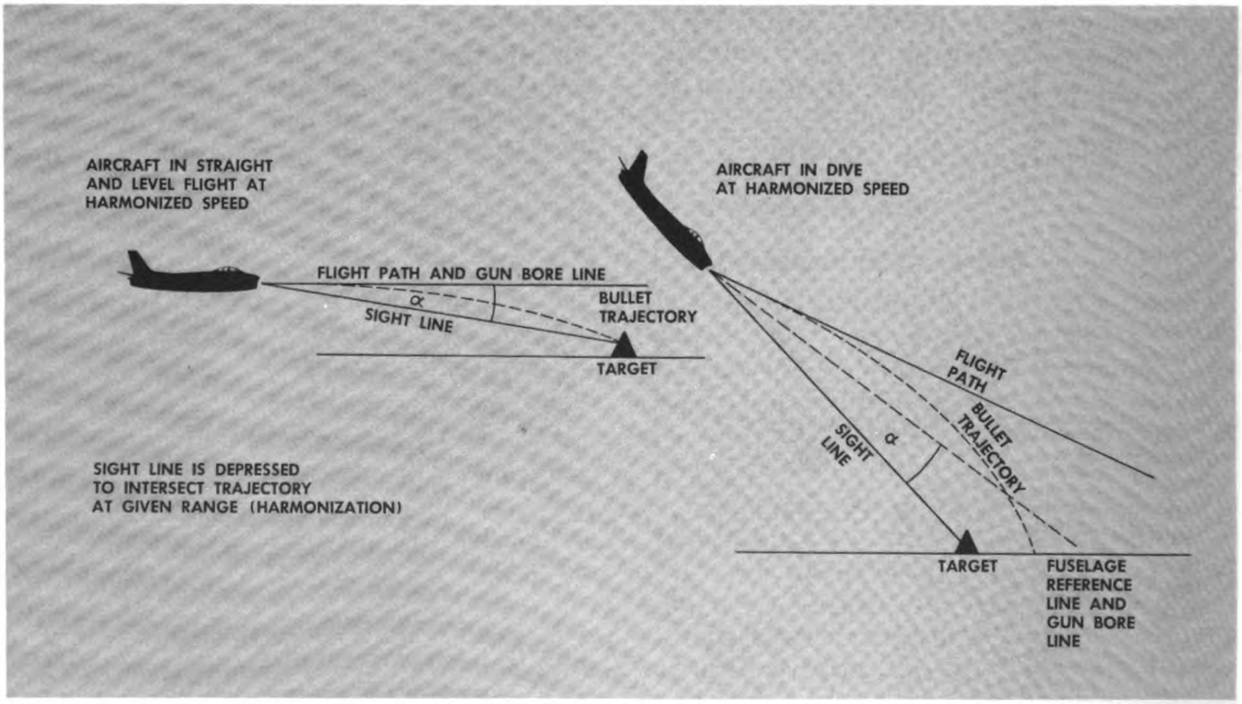

Effect of a Decrease of Angle of Attack on Bullet Impact

Digitized by Google

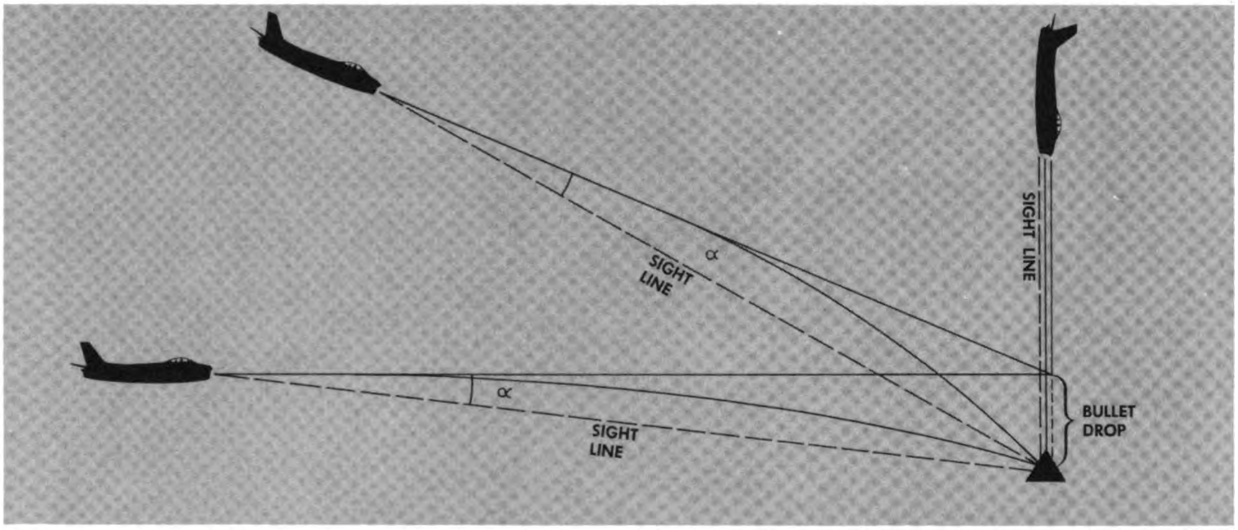

Change of Angular Subtension of Bullet Drop with Change of Dive Angle

range is usually harmonized out. In the above illustration the sight has been depressed down to effective bore line of the guns.

The aircraft that is flying straight and level has its sight line depressed through an angle α to intersect the trajectory of the bullets at harmonized range. This is the act of harmonization. The aircraft in the 45° dive is at such a range that the time of flight of the bullet is exactly the same as for the straight and level aircraft. Therefore, bullet drop is the same. Because the aircraft is in a dive, the angular subtension of the bullet drop at the sight is less, or angle α is smaller. The aircraft in the 90° dive requires no sight depression. As the aircraft is harmonized for straight and level flight, any time the guns are fired in a dive the sight depression will be too great for the flight conditions. This will result in the bullets overshooting the sight picture. This overshoot error increases as the angle of dive is increased.

Speed. With the aircraft in a dive, speed is normally increased above that used for harmonization. From the combat standpoint high speed is desirable. If airspeed is increased, then lift is increased. However, as already pointed out, an increase in lift is not necessary; in fact less lift is required. Therefore, the angle of attack has to be decreased still more to compensate for the increase in lift due to the higher airspeed. This decrease in angle of attack will have the same effect as the decrease in angle of attack due to the dive angle, and the two effects will be added together. Thus, the bullet impact will be farther above the sight line at harmonized range, resulting in an added overshoot. This is shown below.

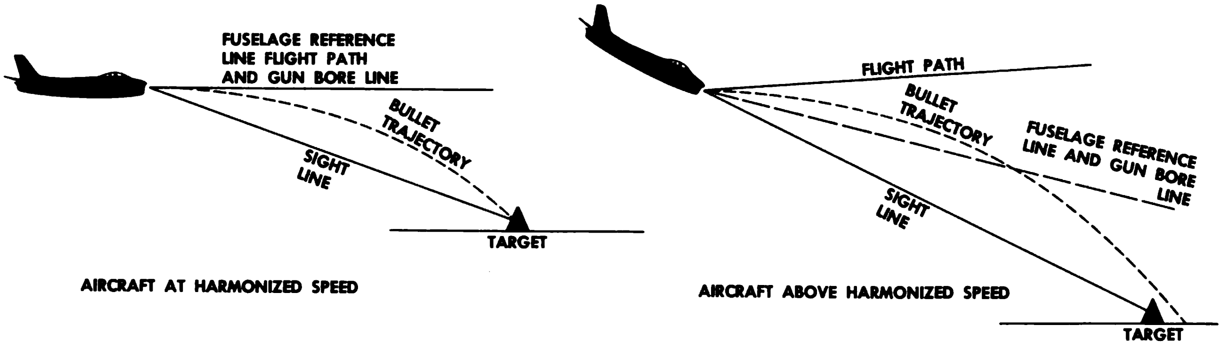

Effect of Change of Airspeed on Bullet Impact

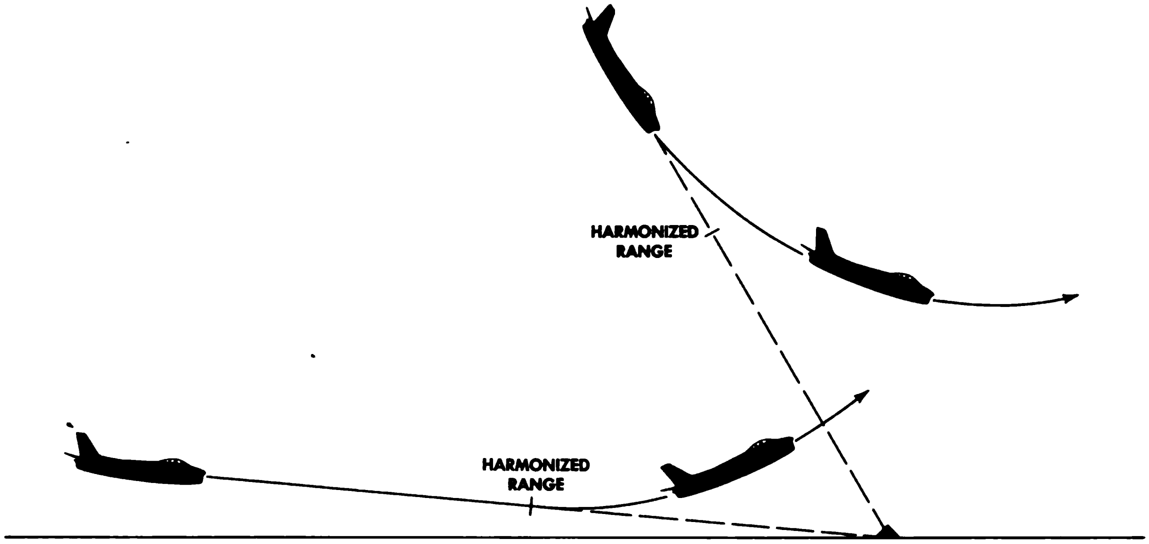

Effect of Dive Angle on Firing Range

Recovery and firing range. The steeper the dive angle the greater the altitude at which recovery from the dive must be commenced for a given airspeed. This has a direct bearing on the range at which firing will have to cease, and consequently on the range at which the pilot will have to commence firing. At normal dive angles the pilot will cease firing as the aircraft reaches harmonized range or just slightly before. The pilot will be able to get closer than harmonized range only by using extremely shallow dives, and then only by a very small amount. These situations are shown above.

The pilot in all probability will have to fire at ranges in excess of that for which he is harmonized. As shown in the next drawing, bullet drop will be greater with the result that there will be an undershoot error.

Bullet drop is not proportional to range. A glance at any ballistic table will show that the increase in bullet drop from 2,000 feet to 3,000 feet is far greater than from 1,000 feet to 2,000 feet. Bullet drop is a function of the time of flight of the projectile. The bullet is decelerating from the moment it leaves the barrel of the gun, therefore, its time of flight for a specific distance increases as range increases. As the pilot will normally have to fire at ranges beyond the harmonized range

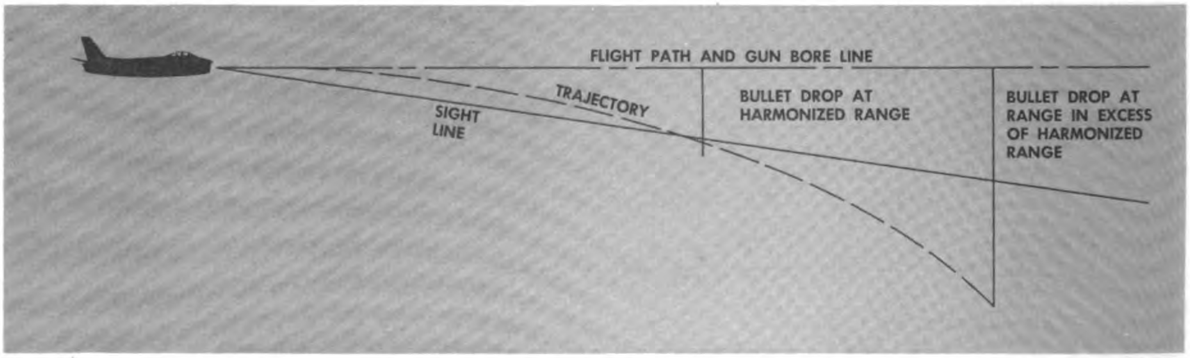

Effect of Increased Range on Bullet Drop

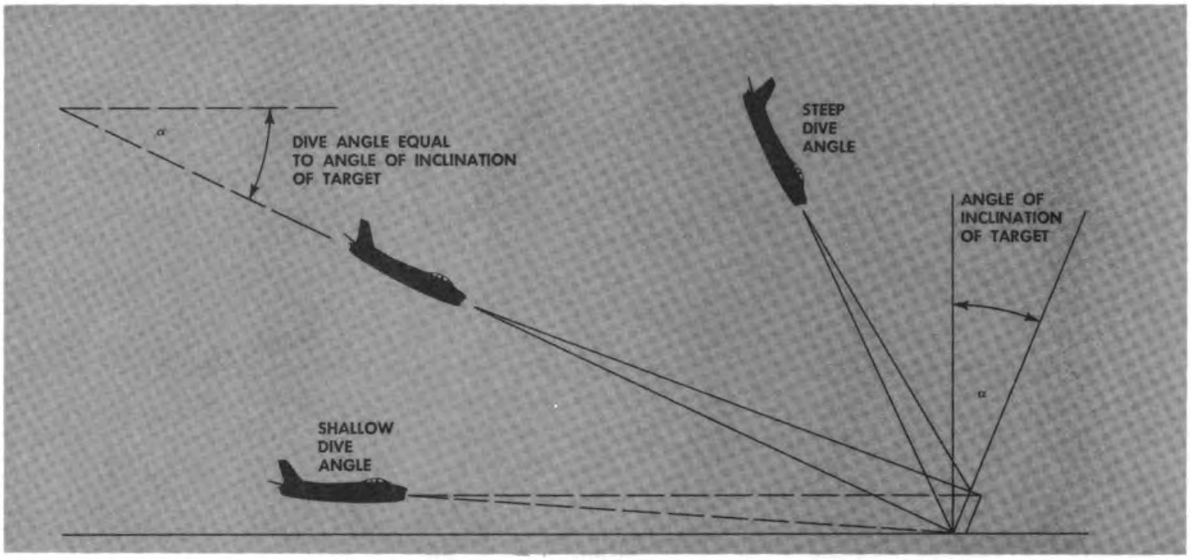

Change of Target Presentation With Change of Dive Angle

the bullet trajectory will be below the sight line, resulting in an undershoot.

Target presentation. The panel strafing targets on a ground range are inclined at an angle of 20° to the vertical. This angle should be the mean dive angle of the aircraft using the range. If the dive angle of the aircraft is the same as the angle of inclination of the targets, then the pilot has 100% presentation of the target. This is shown in the above drawing. If the dive angle is steeper or more shallow than the angle of inclination of the targets, then the pilot will see a fraction less of the target. This obviously affects sighting accuracy and the number of bullets that will enter the target.

Effect of Slant Range

Harmonized range. As already seen in the discussion on recovery and firing range, firing in low angle strafing is normally accomplished beyond the harmonized range. Due to increased bullet drop at these ranges and the bullet's trajectory being below the sight line, this will result in an undershoot error.

Bullet density. The M2 caliber .50 machine gun has a 75% cone of fire of 4 mils. The drawing below shows a cross section of this cone of fire at 1,000 feet and 2,000 feet from the gun, superimposed on a 10- by 10-foot panel strafing target when a burst of 100 rounds is fired in 1 second.

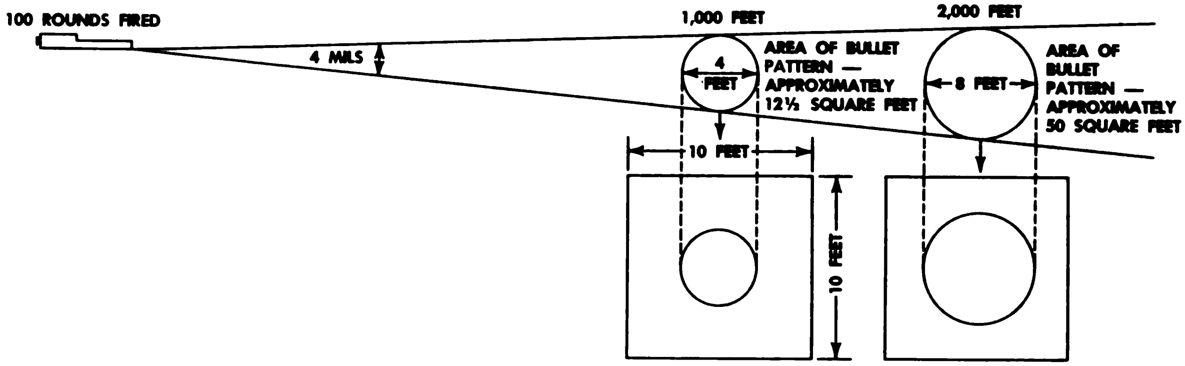

Effect of Range on Bullet Density

Digitized by Google

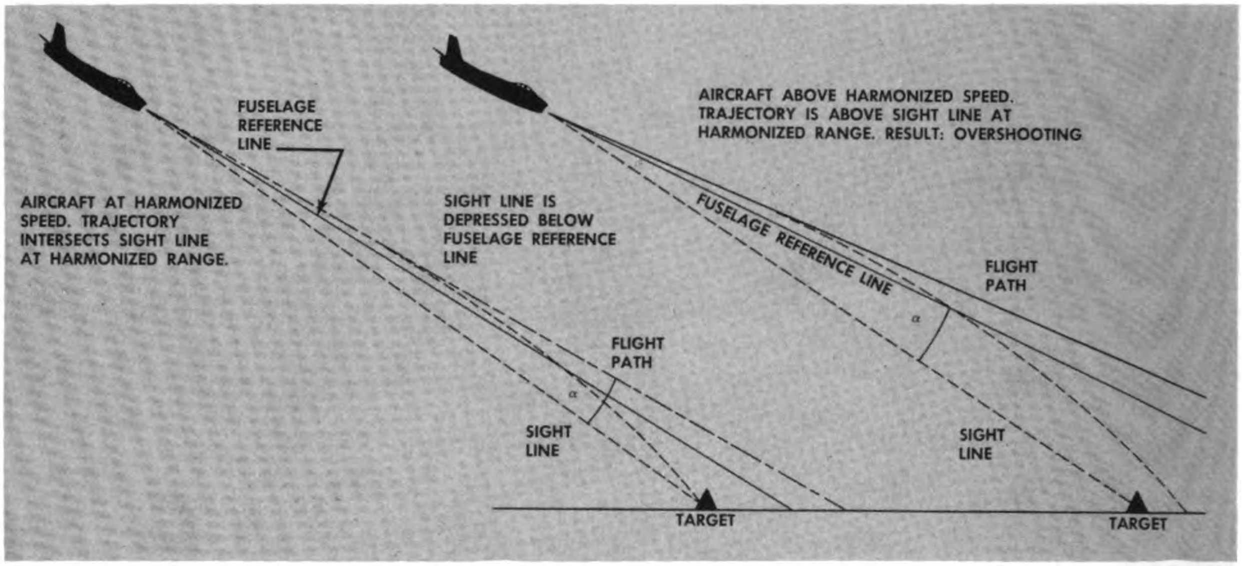

Effect of Airspeed on Bullet Impact

At a range of 1,000 feet the number of bullets per square foot of the cross section of the bullet cone is equal to 75 divided by 12.5, or 6 rounds per square foot. At a range of 2,000 feet the number of bullets per square foot of the cross section of the bullet cone is equal to 75 divided by 50, or 1.5 rounds per square foot. Thus, by doubling the range the bullet density has been decreased to one quarter. Therefore the bullet density is inversely proportional to the square of the range.

Now consider this 75% cone superimposed on the 15- × 15-foot panel target. At 1,000 feet, there is a tolerance of 5½ feet on either side and to the top and bottom of the cone before it is off the target. At 2,000 feet, this tolerance is reduced to 3½ foot. Thus, at 1,000 feet, there is an appreciable allowance for wander of aim, still maintaining the cone of fire within the bounds of the target, and also there is a very good chance that the remaining 25% of the rounds outside the 75% cone will hit the target. At 2,000 feet, the allowance for wander of aim is reduced considerably, and the possibility of rounds outside the 75% cone hitting the target is quite remote. By keeping the firing range to a minimum, the "hitting power" or bullet density (number of rounds per square foot per second) is increased, and there is a greater allowance for the pilot's aim wander.

Effect of Airspeed

HARMONIZED SPEED. An aircraft is harmonized for one particular speed, and variations from this speed while firing will alter the impact point of the bullets relative to the sight line. Normally the airspeed used in a strafing attack will be above the harmonized speed. This increase in speed requires a compensating decrease in angle of attack to the relative airflow in order to maintain the same amount of lift. This decrease in angle of attack results in the bullets overshooting the aiming point, as shown above.

The converse is also true. If speed is reduced the angle of attack has to be increased in order to maintain the required amount of lift. This change results in the trajectory being below the sight line at harmonized range, giving an undershoot error.

RECOVERY AND FIRING RANGE. Speed has the same effect on the recovery from the attack as did the dive angle. The higher the airspeed, then the greater the range from the target that recovery must be initiated. Therefore, speed has a direct bearing on the range at which firing may be commenced on the target, and the range at which firing has to necessarily cease. The speed during an attack is normally quite high, especially under combat conditions. Therefore, the pilot will have to fire at relatively long ranges resulting in

Digitized by Google

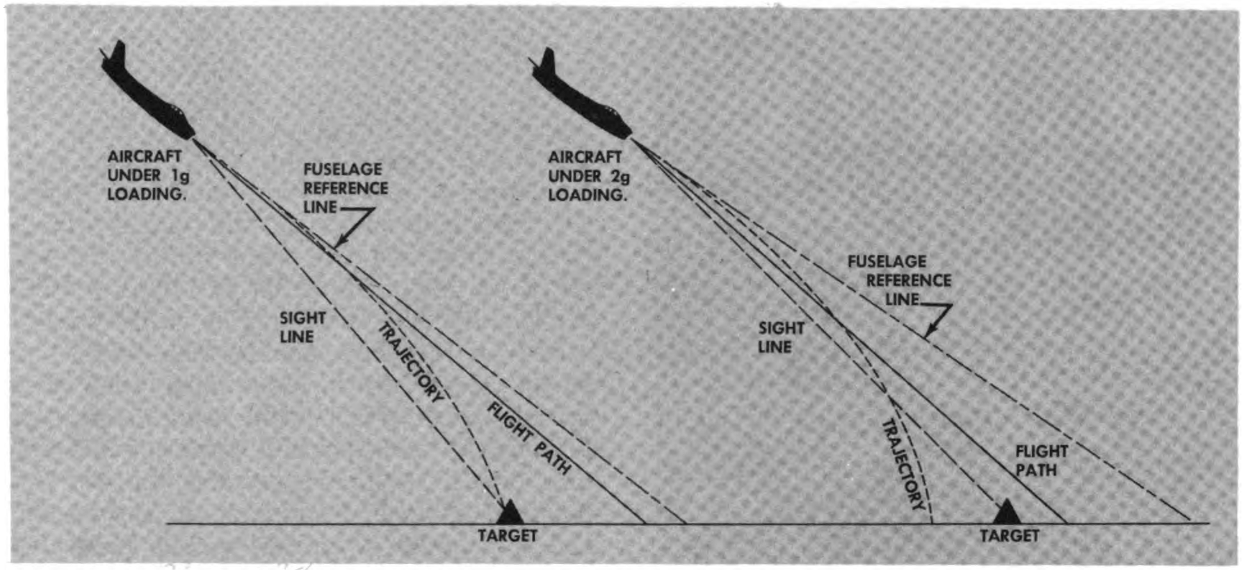

Effect of g Loading on Bullet Impact

an undershoot error.

TIME ON TARGET. It is obvious that an aircraft flying at 500 knots will have a rate of closure to the target greater than an aircraft flying at 300 knots. The pilot of the faster aircraft has less time to deliver his attack, has less time to make corrections in air, and must fire a shorter burst. For the same accuracy of firing, the pilot of a faster aircraft will get less hits in the target than the pilot flying a relatively slower aircraft.

Effect of g Loading

If an aircraft is subjected to an increase in *g* loading, then the lift will have to be increased. The extra lift is obtained by increasing the angle of attack of the wing to the relative airflow. An increase in angle of attack changes the impact point of the bullets relative to the sight line, with a resulting undershoot error. This is shown above.

Therefore, if positive *g* loading is applied to the aircraft while firing, the impact point of the bullets will undershoot the aiming point. Conversely, negative *g* application will result in an overshoot error.

Effect of Skid

A bullet fired from an aircraft in flight has two velocities imparted to it: muzzle velocity and aircraft velocity. If the aircraft is flying in a skid condition, the gun bore line is not coincident with the aircraft's flight path. Therefore, the two velocities imparted to the bullet act in different directions, as shown in the drawing below.

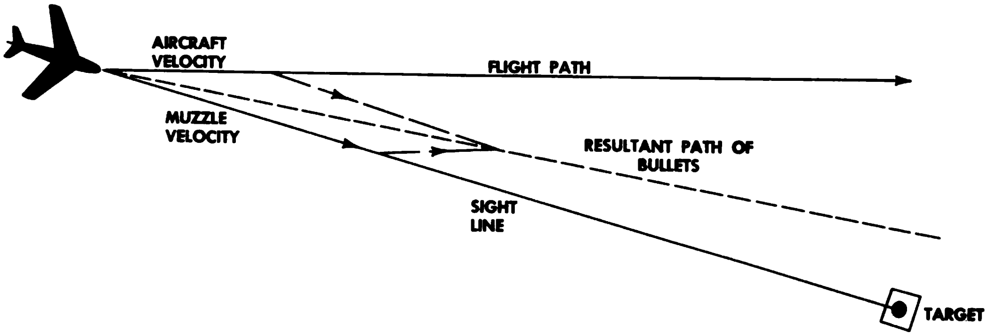

Effect of Skid on Bullet Impact

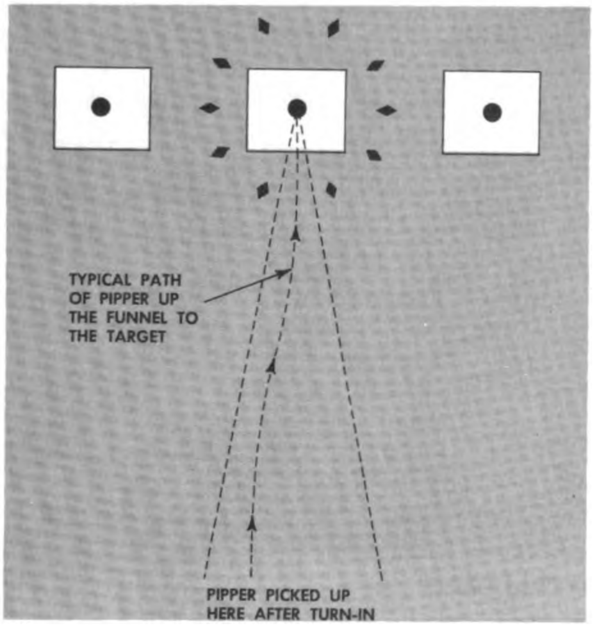

Development of Sight Picture When Strafing in No Wind

If the pilot is applying right rudder and maintaining the sight on the target, the point of impact of the bullets will be to the left of the target. Conversely, left rudder application will result in an error to the right.

Pilot Technique in Low Angle Strafing

Consider an attack in a no-wind condition. The pilot executes correctly a coordinated diving turn from the base leg toward the target. As in all gunnery, this turn tends to determine the quality of the attack. A good turn-in may result in a good attack, whereas a bad turn-in invariably sets up a bad attack. Due to inherent stability, an aircraft in a dive and gathering speed tends to recover from the dive. This tendency may be used to good advantage in a strafing attack. Every pilot has a certain degree of aim wander which varies with experience, ability, mental condition, and physical condition. This aim wander makes it impossible for him to hold a sight on a particular object for a great length of time. If the pilot turned into the attack and placed the pipper on the target as soon as possible, by the time he reached firing range the pipper would be wandering considerably, and in all probability would be far from the desired aiming point.

With the turn-in completed, the pipper should be placed below the target. The natural tendency of the aircraft to recover from the dive is used to allow the pipper to "walk up" to the desired aiming point. The amount that the pipper is placed below the target varies with individual pilots and the type of attack, that is, speed and dive angle. However, it will be in the region of 10 to 20 target widths. While the pipper is moving up to the target, corrections can be made for line error. The pipper should reach the aiming point just before the aircraft reaches firing range, the the pipper is steadied and firing commenced. As shown in the drawing at left, there is virtually a "funnel" leading up to the target, and the pipper is moved up this funnel to the aiming point.

The size of the pipper in relation to the size of the target is the pilot's best indication of range. For instance, the pipper of the A-4 gunsight subtends an angle of 2 mils; therefore, at a range of 1,000 feet it will appear to be the same size as a 2-foot diameter circle and at a range of 1,500 feet, it will appear to be the same size as a 3-foot circle. Normally, the 10- by 10-foot panel strafing target has a 2-foot diameter bull painted in its center. The 15- by 15-foot panel strafing target has a 3-foot diameter bull.

Effect of Wind and Target Speed

Firing in a wind or against a moving target will present the same difficulty to the ground strafing pilot as it did in low level bombing. A correction will have to be made into the wind or ahead of the moving target. The bullet fired in a wind will drift downwind a distance equivalent to the product of the bullet's time of flight and the wind speed. The aiming point will be this distance into the wind. Similarly, the pilot firing, at the moving target will have to aim ahead of the target a distance equivalent to the product of the bullet's time of flight and the target speed.

The time of flight of the bullet is extremely short, therefore, the correction for wind or target speed is relatively small in comparison to that of the bomb. The rule of thumb for obtaining this correction is to allow ½ mil per m.p.h. of target or wind speed. Thus, if firing

Digitized by Google

against a target traveling at 30 m.p.h., the pilot will aim 15 mils ahead of the target. If attacking a stationary target in a 15-m.p.h. cross wind, the pilot will aim 7½ mils into the wind, providing no drift correction is applied to the aircraft.

There are two methods open for the pilot to use in laying off this correction or lead into the wind or ahead of the moving target: the "bank" method and the "drift" method.

"BANK" METHOD OF CORRECTION. This is exactly the same as flying the correctly banked turn in the low angle bombing attack. The aircraft is banked into the cross wind and the pipper "walked up" to the target in the manner of a no-wind attack so as to arrive at the correct aiming point just before the aircraft reaches firing range.

This method of correction is good except for one detail — an aircraft is harmonized with the wings laterally level. The drawing in the next illustration shows the rear view of an aircraft being harmonized, with the displacement of the bullets' point of impact below the gun bore line, due to gravitational attraction or bullet drop. The sight line is made to intersect the impact point at harmonized range. The drawing below shows what happens when the aircraft is in a bank. The sight line is depressed perpendicular to the aircraft's lateral axis, whereas the bullet drop still acts vertically.

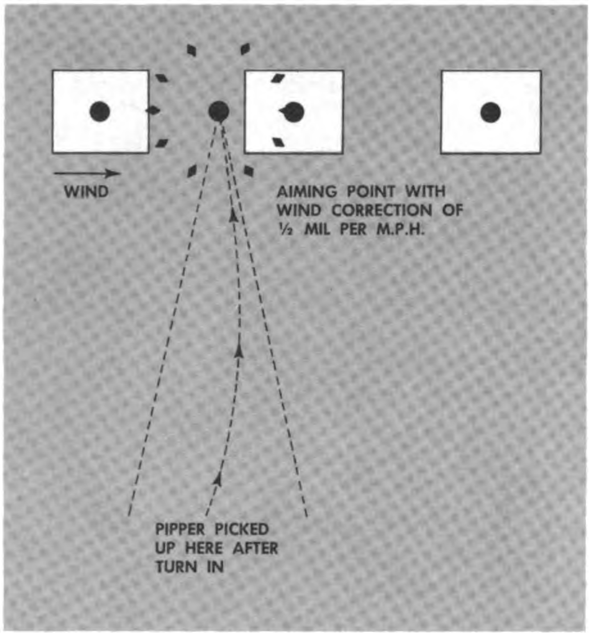

Development of Sight Picture When Firing in a Crosswind and Using Bank to Correct Drift

It can be seen that if the sight is placed in the correct aiming position for this particular cross wind, the point of impact will be short and to the left of the target. Therefore, by using this method of correction the pilot will always have an undershoot error and an error in the direction of the bank, and these errors will increase as the angle of the bank is increased.

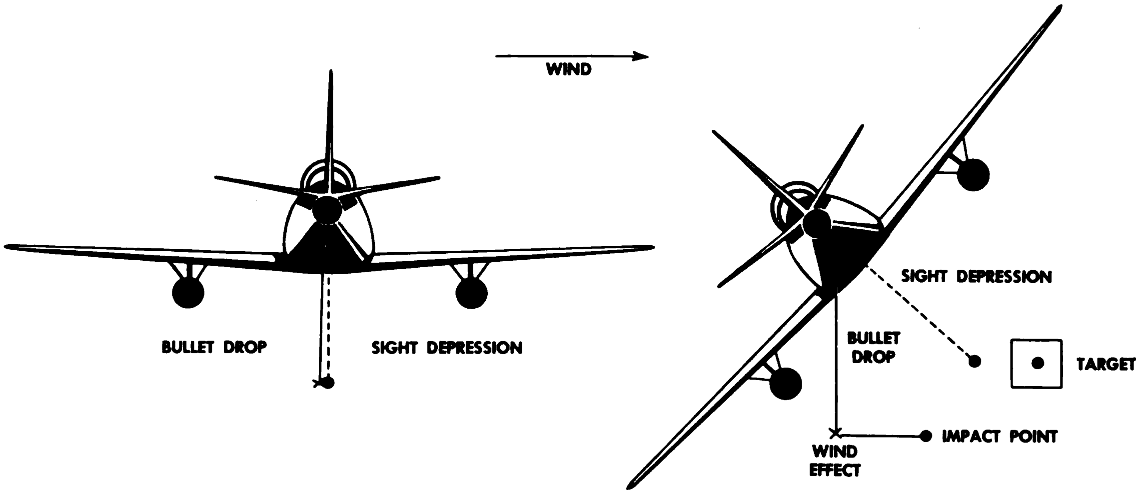

Effect on Bullet Impact When Bank Is Used to Correct Drift

Digitized by Google

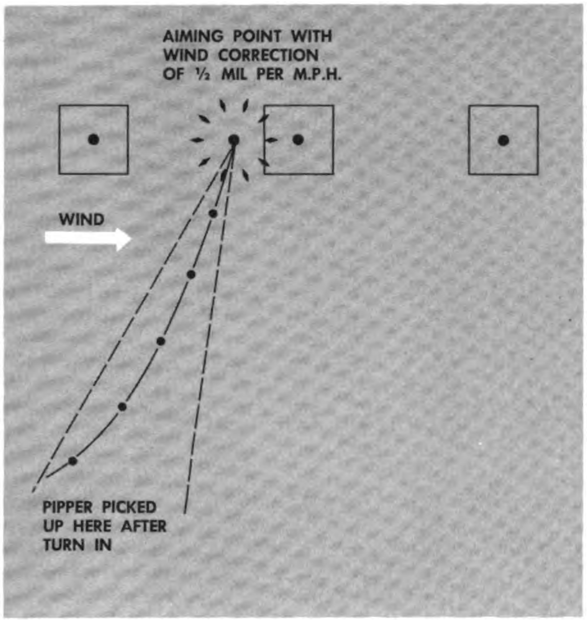

Development of Sight Picture When Firing in a Cross Wind and Maintaining the Aircraft

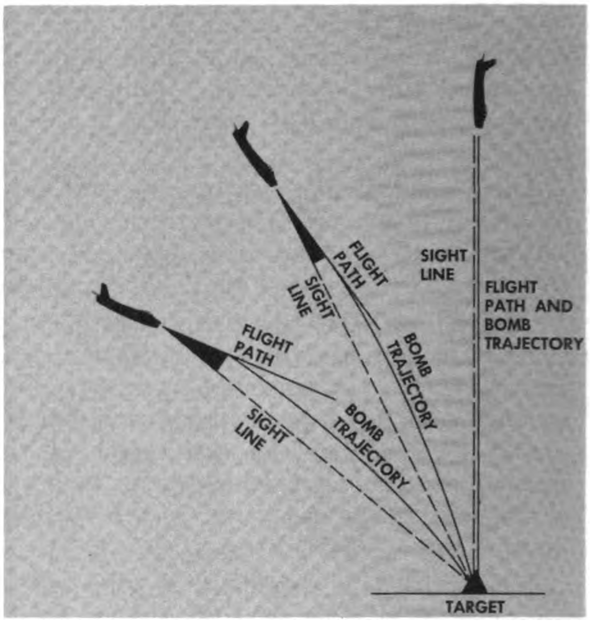

Effect of Dive Angle on Required Sight Depression

"DRIFT" METHOD OF CORRECTION. With this method, after completion of the turn-in, the pipper is placed into the wind a greater distance than is necessary to allow for the wind correction. This is shown in the above drawing. As the aircraft approaches the target the pipper is not only allowed to "walk up to the target but is also allowed to drift downwind toward it until the correct aiming point is reached. While the pipper is drifting downwind to the target, corrections can be made for its speed of drift by applying bank, striving to have the wings level at the time of firing.

DIVE BOMBING

Dive bombing is a method of delivering a bomb to a target without getting too close to the enemy ground fire. It is used against a target that cannot be bombed at low level and that requires more accuracy than can be guaranteed by high level bombing. The forces that are acting upon a bomb in a low level attack have already been described. In exactly the same manner in dive bombing, the bomb's trajectory curves away from the aircraft's flight path due to the force of gravity. A sight in the cockpit would have to be depressed through a calculated angle in order to predict the point of compact. As indicated in appendix V, this angular sight depression is dependent upon dive angle, airspeed, and slant range, and any variation in these three factors will affect the accuracy of the bombing.

Effect of Dive Angle

The sight depression is calculated for one particular dive angle and is accurate for that dive angle only. It can be seen in the next drawing that as the dive angle increases, the required sight depression decreases. If the attack is made in a dive steeper than the one for which the sight depression was calculated, less depression is required. Thus, the depression being used for a steeper attack is too great, and as a result the bomb will overshoot the target. Conversely, if the attack is made in a shallower dive than the one for which the depression is calculated, then the bomb will undershoot.

It has already been seen in low angle strafing that the angle of attack of the aircraft varies with the dive angle. As the dive angle increases, the angle of attack of the aircraft decreases. The next drawing shows aircraft

Digitized by Google

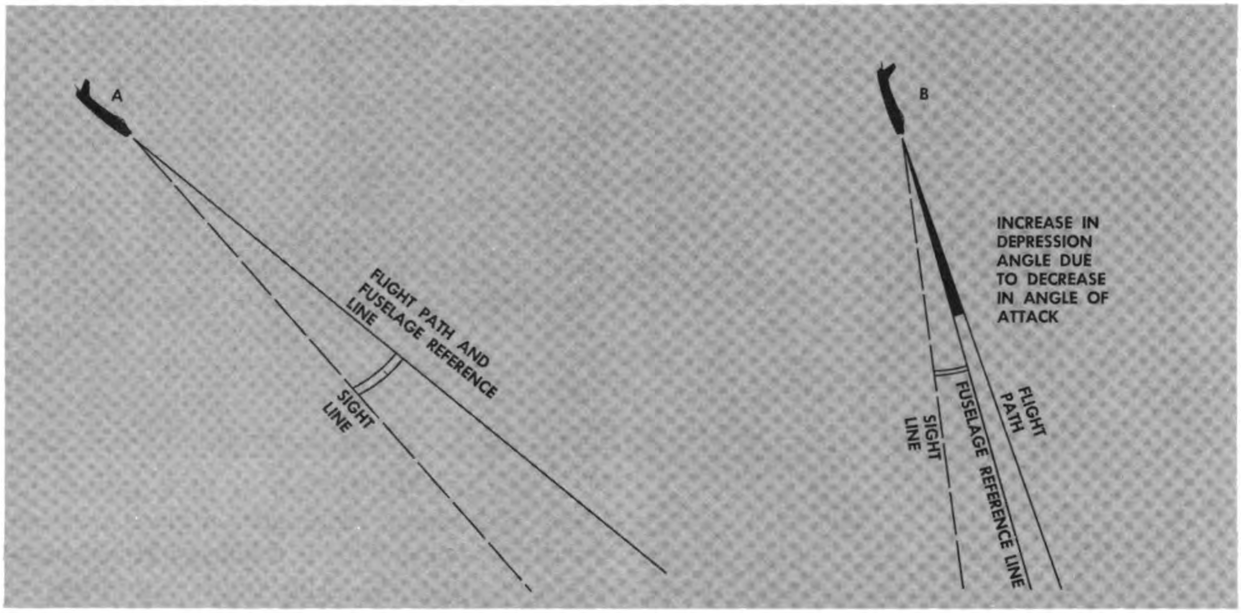

Effect of Decrease of Angle of Attack on Effective Depression

A diving at the correct angle with the correct depression between the fuselage reference line and the sight line. Assume that at this particular configuration aircraft A has the fuselage reference line and flight path coincident. Aircraft B is diving at a steeper angle, and therefore the angle of attack has been decreased. In this case the fuselage reference line is now depressed below the flight path due to the decrease in angle of attack, but the sight line is still depressed the same angle relative to the fuselage reference line. The bomb when released leaves initially along the flight path and so the depression required is measured between the flight path and the sight line. Thus, aircraft B is using more depression due to the decrease in angle of attack with the result that the bomb will overshoot.

Effect of Airspeed

The sight depression is calculated for one particular airspeed at release, and changing this speed will result in an error. If the speed is increased, the bomb trajectory will more closely follow the flight path of the aircraft and so less depression is needed. Therefore, if the calculated depression is used on a faster attack, the bomb will overshoot. Conversely, at slower speeds the bomb will undershoot. These effects are shown to the right.

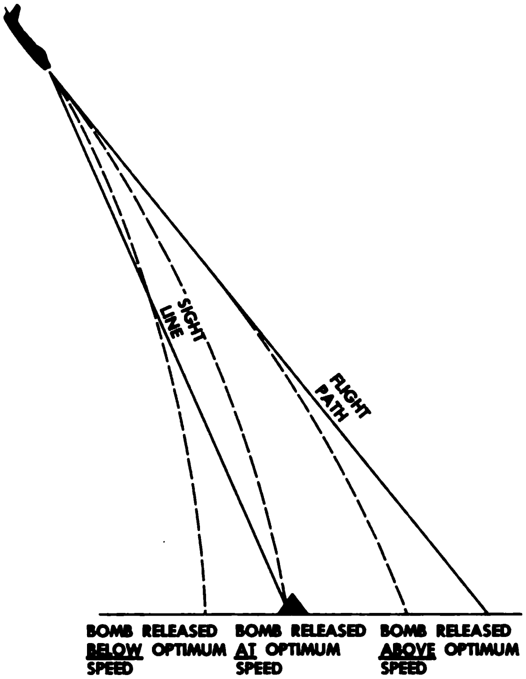

Effect of Airspeed on Bomb Trajectory

Digitized by Google

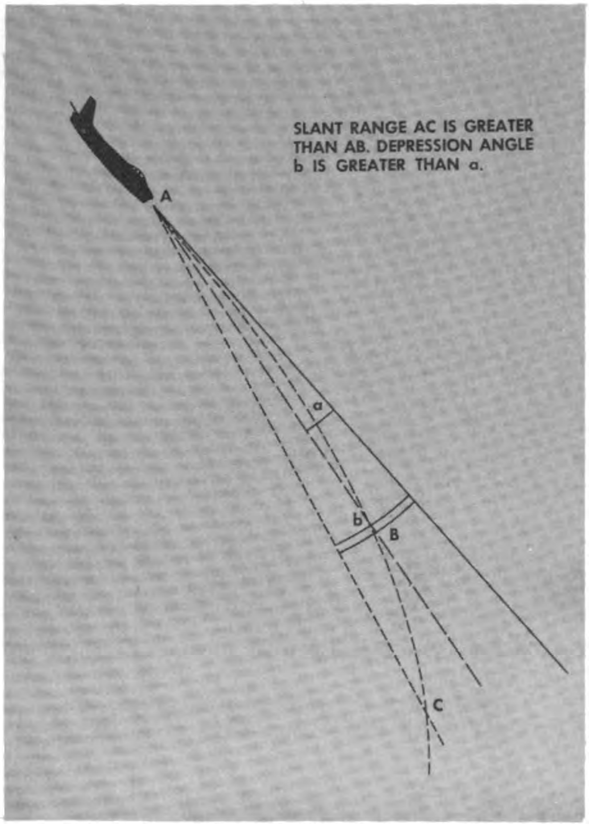

Effect of Slant Range on Required Sight Depression

If an aircraft changes its airspeed, it will automatically change its angle of attack. Thus, if airspeed is increased, angle of attack is decreased. A decrease in angle of attack due to an increase in speed will alter the sight depression in the same manner as an increase in dive angle. Therefore, if speed is increased above the optimum used for the calculated sight depression, the pilot will be using too much depression with the result that the bomb will overshoot. Conversely, at slower speeds, with an increase in angle of attack, the bomb will undershoot.

Effect of Slant Range

The closer an aircraft is to a target the less depression is required at a given airspeed and dive angle. This is shown in the illustration to the left. The sight depression is calculated for a particular slant range, and if the bomb is released at a greater slant range, than more depression is required. The result of releasing the bomb at a greater slant range will be an undershoot. Conversely, a bomb released at a closer slant range than that for which the sight depression is calculated will overshoot the target.

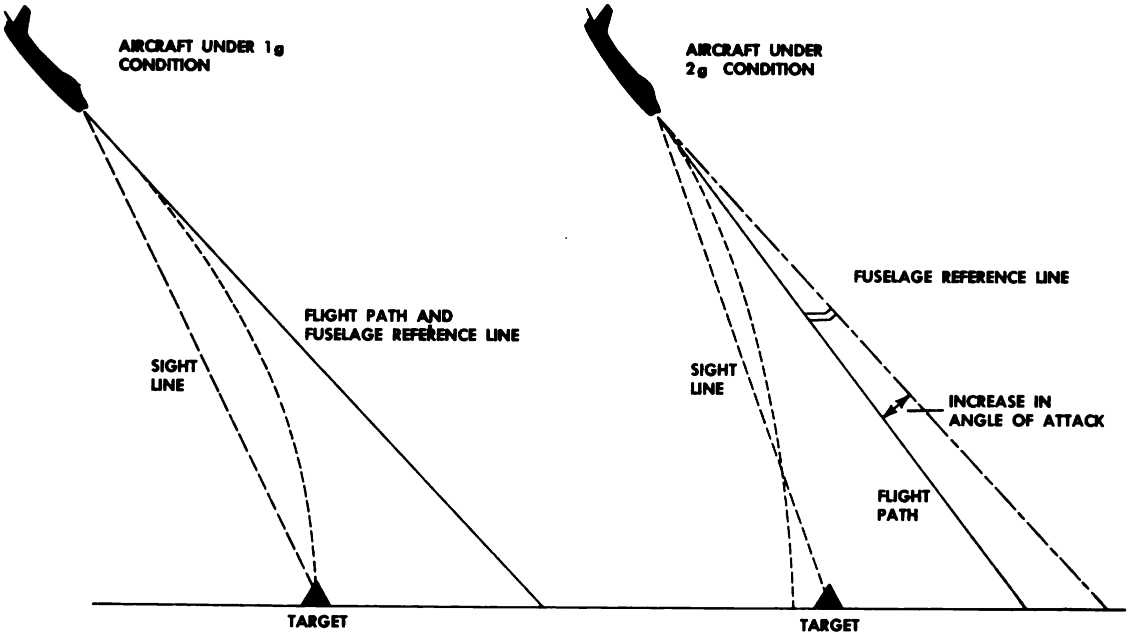

Effect of g Loading on Bomb Loading

Digitized by Google

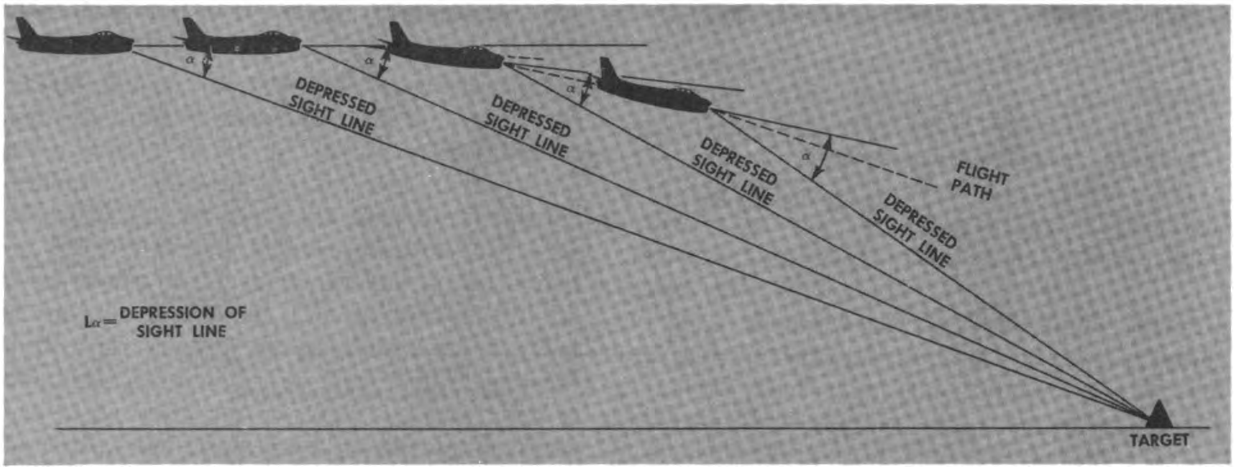

Curved Path or "Bunt" Flown With a Depressed Sight Line

Effect of g Loading

The effect of an increase in *g* loading on an aircraft is to increase the angle of attack. This will in effect decrease the sight depression relative to the flight path. Both aircraft in the illustration on the preceding page are flying at the same airspeed and dive angle. They will release the same slant range; therefore, the same sight depression is required. The bomb's trajectory will initially be along the flight path. One aircraft has an increased angle of attack due to an increase in loading, and this decreases the depression relative to the flight path. The resultant error will be an undershoot. Conversely, a negative *g* loading will result in an overshoot.

Effect of Skid

The effect of skid on a bomb's trajectory was discussed for low level bombing earlier in this chapter. The result of a skid while dive bombing will be exactly the same, only accentuated. If a bomb is dropped while flying with 20 mils of skid in a low level bombing attack, the linear error at the target will be about 20 feet because on an average the aircraft will be approximately 1,000 feet from the target at release point. With dive bombing, the slant range is of the order of 5,000 feet, and so with the aircraft in the same 20-mil skid the linear error at the target will have increased to 100 feet. Thus for the same skid angle the error at the target is greater because of the increased slant range.

Pilot Technique in Dive Bombing

Consider an attack in a no-wind condition. The pilot executes a normal correctly coordinated diving turn onto the target from the base leg, placing the depressed sight line in the vicinity of the target and below it. The reasons for placing the sight below the target are the same as in the low angle strafing attack, but now all effects are magnified as the aircraft is traveling at a higher speed in a steep dive.

There is now one more effect added to the difficulty of the attack — the depressed sight line. When a depressed sight line is maintained constantly on the target, a curved path or "bunt" must be flown as shown above.

It can be seen that a steady increase in the forward pressure on the control column will have to be executed, a very unnatural and uncomfortable maneuver for a pilot to perform. Placing the sight below the target in the initial stages of the attack will alleviate this effect. Also, placing the sight below the target preserves the dive angle. Otherewise, if the sight were on the target as soon as that dive is commenced, the angle of dive would increase automatically. The sight is allowed to "walk up" to the target so that it arrives at the desired aiming point just slightly before the release point is reached. Then it is steadied and the bomb released.

There is an added difficulty to flying with a greatly depressed sight line; it is known as pendulum effect. Due to the depression, the sight line is well below the aircraft's rolling

Digitized by Google

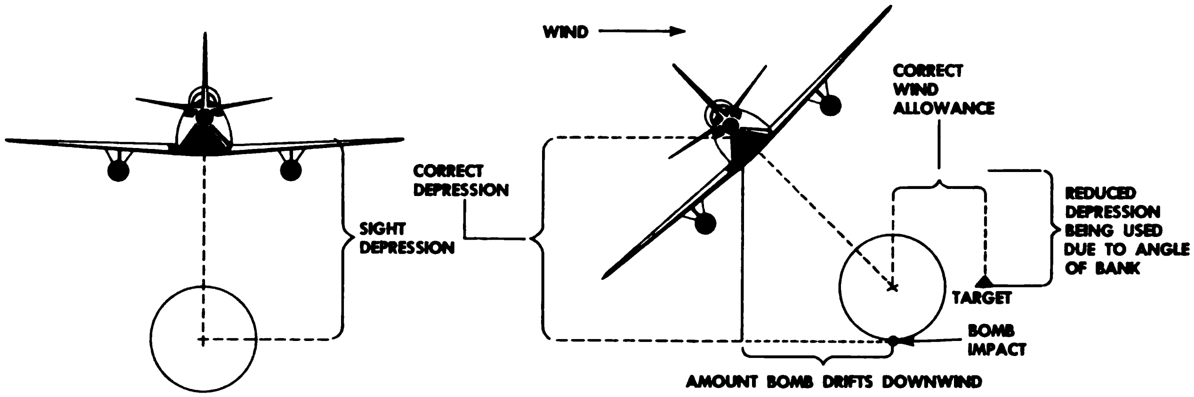

Effect of Bank on Sight Depression

or longitudinal axis. This produces the pendulum effect when a correction has to be made for line error. With the depressed sight to the left of the desired aiming point, the only method of correction is to execute a correctly banked turn to the right, bringing the sight back the required amount, and then to roll out of the bank. As the bank to the right is commenced, the sight at first appears to move to the left. This is because it is depressed and is at the "bottom" of the turn. Naturally, as the turn is continued the sight will move to the right, but the roll out must be well anticipated. As the rollout is executed, the sight in this case appears to move more to the right, and this will continue until the roll-out is completed. Thus, flying the depressed sight line calls for very good judgment, especially in anticipating the roll-out for a line error correction.

Effect of Wind and Target Speed

As in low angle bombing, wind effect or target speed, or a combination of both, will present one of the biggest difficulties that a pilot has to overcome during dive bombing. Again an allowance will have to be made into wind, equivalent to the product of the time of fall of the bomb and the wind speed. The rule-of-thumb correction allowance of 2 mils per m.p.h. of target or wind speed still holds good. Although the bomb is released at a much greater distance from the target in dive bombing, the correction can be the same, because the mil is an angular measure.

Correction for Wind and Target Speed in Dive Bombing

With an attack in a no-wind condition, it was seen that the pilot placed the depressed sight line below the required aiming point after he had completed the turn-in, and that the sight was allowed to move up to the aiming point. In a cross wind, the sight will appear to drift downwind during the dive. The aircraft should not be banked into the wind to counteract this as the wings have to be exactly laterally level when the bomb is released. Any bank will reduce the sight depression, causing an undershoot error and also a line error in the direction of the bank. This is shown above.

It can be seen that the "bank" method of applying correction cannot be used, and that the only accurate method of aiming in dive bombing in a cross wind or against a moving target is the "drift" application. Here, as in low angle strafing, the sight is placed below the desired aiming point after turn-in and into the wind a greater distance than is necessary for the wind allowance, or a greater distance ahead of the moving target. Now as the dive progresses, the sight is allowed to move up to the desired aiming point, at the same time drifting downwind. The rate of drift downwind is controlled by the application of bank in such a manner that, when the sight reaches the aiming point, the wings are laterally level. The sight's movement is steadied and the bomb released.

Digitized by Google

Dive Bombing in Up Wind, Downwind, or Cross Wind

The illustration on this page shows the sight pictures for three attacks: up, down, and cross wind. Bombing in a cross wind is difficult because of the apparent drift of the target at 90° to the sight line. For bombing up wind, a greater sight depression has to be used as the wind allowance has to be added to the true depression. This tends to add to the difficulties caused by pendulum effect. For bombing downwind, a smaller sight depression has to be used, as the wind allowance has to be subtracted from the true depression, thus minimizing pendulum effect. Bombing with the wind tends to steepen the dive angle as opposed to the shallowing effect of bombing against the wind. The normal tendency of most pilots is to dive at a shallower angle than estimated, so bombing with the wind helps to eliminate this error.

HIGH ANGLE STRAFING

The high angle strafing attack is the normal method of delivering a frontal gun attack under combat conditions, allowing the pilot to record fairly accurate results without bringing him as close to the enemy ground fire as in the low angle attack. High angle strafing may be defined as that type of attack where the dive angle is 35° or more.

The accuracy of the high angle strafing attack is affected mainly by three major factors: dive angle, slant range, and airspeed. These three factors and their effect on the attack will be dealt with individually.

NOTE: Review the section on low angle strafing earlier in this chapter.

Effect on Dive Angle

EFFECTIVE WEIGHT. It was seen in the low angle strafing attack that an aircraft requires less lift in a dive than an aircraft in straight

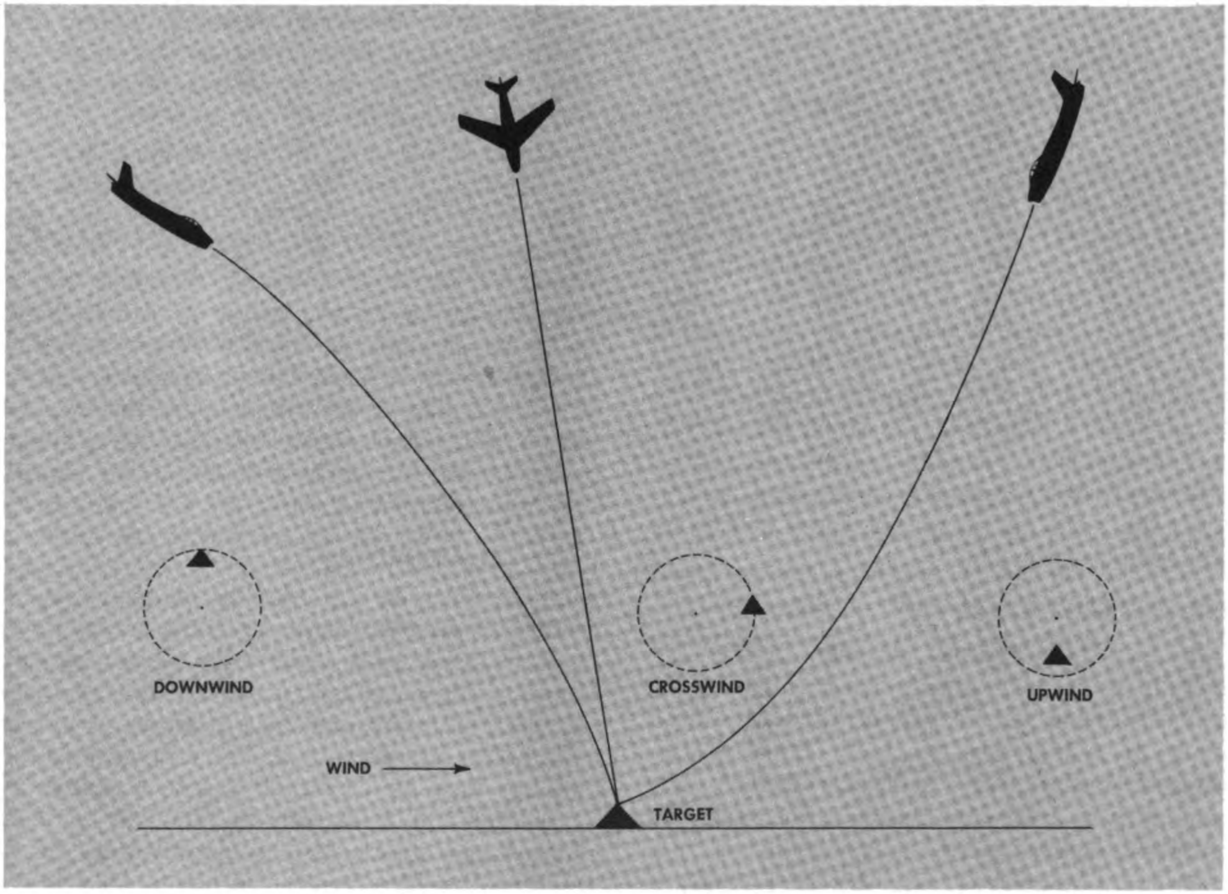

Bombing in a Wind

and level flight. The resultant reduction in angle of attack is exactly the same in the high angle attack, but here because the dive angle is so steep the reduction in lift, and consequently angle of attack, is much more marked. The resultant overshoot effect from this change of angle of attack will also be greater.

BULLET DROP ALLOWANCE. As with low angle strafing, the fact that the aircraft is firing in a dive and yet was harmonized under straight and level flight conditions changes the bullet impact point with reference to the sight line. With the aircraft in a dive the angular subtension of the bullet drop at the sight is less than for straight and level flight. This will result in an overshoot effect as in low angle strafing. However, this overshoot effect will be far greater in the high angle attack as compared with the low angle because of the increase in the angle of dive.

SPEED. With the aircraft firing in a fairly steep dive, the speed will generally be increased well above that used for harmonization. As seen in low angle strafing this will result in a decrease in angle of attack with a resultant overshoot of the bullet impact.

RECOVERY AND FIRING RANGE. The steeper the dive angle the greater the altitude at which recovery from the dive must be commenced for a given airspeed. As the attack is now being made at a relatively steep angle the recovery must be initiated at a reasonably high altitude. This means the firing must be accomplished at a long range, definitely at a range greater than that for which the aircraft was harmonized. Firing at this increased range will result in an increased bullet drop, and so with the sight on the target there will be an undershoot error.

Effect of Slant Range

HARMONIZED RANGE. As seen in the discussion on recovery and firing range, firing must be conducted far beyond the harmonized range in a high angle attack. With the increased bullet drop at these ranges, the trajectory is well below the sight line, resulting in an undershoot effect.

BULLET DENSITY. It was proved in the low angle strafing section that bullet density is inversely proportional to the square of the range. In the high angle attack, range has been increased so much that the bullet density is greatly reduced. This is a very important factor in a combat situation. The firing range in a high angle attack is normally at least four times greater than that used for low angle strafing. This means that the bullet density is reduced to 1/16 or less. There is also a change in the tolerance for a pilot's wander of aim. If a pilot's aim wanders 5 mils (an extremely small wander of aim) and he fires at 1,000 feet from the target, then his linear wander at the target will be 5 feet. However, if he fires at 4,000 feet with the same angular aim wander, then the linear wander at the target will be 20 feet.

Effect of Airspeed

HARMONIZED RANGE. As seen on the previous page, the speed in the high angle attack is normally much higher than that for which the aircraft is harmonized. Therefore, the angle of attack is decreased from that used for harmonization. This decrease in angle of attack will have an overshoot effect on the impact point of the bullets.

RECOVERY AND FIRING RANGE. Speed has the same effect on recovery from the attack as did dive angle. The higher the airspeed, then the greater the range from the target that recovery must be initiated. Airspeed, therefore, has a direct bearing on the range at which firing may be commenced on the target, and the range at which firing must necessarily cease. During a high angle attack, speed is normally quite high, which means that the firing range must be proportionately greater. This results in an undershoot effect.

Effect of *g* Loading

The effect of a *g* loading on the aircraft while strafing and the resultant errors have already been dealt with in the section on low angle strafing. All effects are exactly the same in the high angle attack, but linear errors at the target are magnified. For a given angular change in angle of attack due to a change in *g* loading, the linear error at the target for a high angle attack will be greater than for a similar angular change in a low angle attack. This is because the slant range in the high

Digitized by Google

angle attack is so much greater. If this slant range is four times greater than the slant range for a low angle attack, then the linear error at the target will be four times as great for the same change in angle of attack.

Effect of Skid

The effect of skid while firing in a high angle attack will be the same as in the low angle attack. However, for the same skid angle, the linear error at the target in a high angle attack will be greater than for a low angle attack. This is caused by the increased slant range used in the steeper attack.

Pilot Technique in High Angle Strafing

The method of getting the sight on the target in a high angle attack is virtually the same as for the low angle attack. A correctly banked diving turn is executed from the base leg, placing the sight in the vicinity of the target and below it. However, in the high angle attack the sight is placed farther below the target, because the rise of the pipper will be more marked due to the higher speed and steepness of the attack. Ideally the sight should arrive at the desired aiming point just before firing range is reached, and there it can be steadied and firing commenced.

Effect of Wind and Target Speed

Firing in a wind or against a moving target will present the same problems in high angle strafing as in low angle strafing. A correction will have to be made into the wind or ahead of the moving target. The bullet fired in a wind will drift downwind a distance equivalent to the product of the bullet's time of flight and the wind speed. The aiming point will be this distance into the wind. Similarly the pilot firing against the moving target will have to aim ahead of the target a distance equivalent to the product of the bullet's time of flight and the target speed. The rule of thumb correction of ½ mil per m.p.h. of wind or target speed still applies to high angle strafing.

Correction for Wind and Target Speed

With the attack in a no-wind condition it was seen that the sight was placed below the target after the completion of the turn-in, and then allowed to move to the desired aiming point as firing range was reached. For firing in a cross wind the sight is still placed below the desired aiming point after turn-in, but farther into wind than is necessary to correct for the drift of the bullet downwind after firing. The sight is moved to the desired aiming point as the dive progresses, and firing is accomplished with the wings level.

The errors that are encountered by using bank to correct for the drift downwind has already been dealt with in the section on low angle strafing. It should be remembered that all angular errors at the aircraft in high angle strafing will be magnified in linear errors at the target due to the increased firing range. For example, in a bank in a high angle strafing attack, the line and undershoot errors will be far greater than for the same angle of bank in a low angle attack, due to the increased range.

ROCKET FIRING

The rocket projectile as a weapon is far more accurate than the bomb and has a far greater penetrating capability against certain targets. However, the explosive content of the rocket is usually much less than that of the bomb. Compared with the gun, the rocket is less accurate, but it is capable of delivering a much bigger projectile with no recoil effects on the aircraft. One of the biggest advantages of the rocket over the gun is that the weight of the mechanism necessary to carry and fire the rocket is far less than the weight of the gun.

Comparison of Rocket and Bullet

The following table gives a comparison between the 2.25-inch SCAR and caliber .50 M2 ammunition when fired under the same conditions and at an air temperature of 70° F.

	Caliber .50	*2.25-inch SCAR*
Initial velocity	2,700 ft./sec.	50 ft./sec.
Period of acceleration	0	0.52 sec.
Time of flight to 550 ft.	0.21 sec.	0.52 sec.

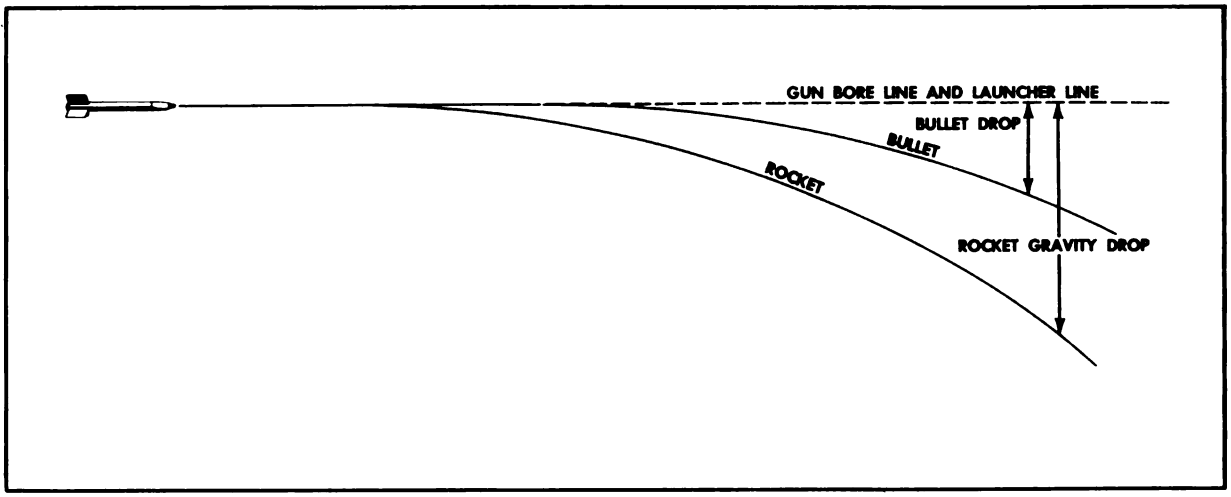

Comparison of Bullet and Rocket Trajectories

	Caliber .50	2.25-*inch* *SCAR*
Velocity at 550 ft.	2,564 ft./sec.	1,050 ft./sec.
Gravity drop at 550 ft.	8.5 inches	6 ft.
Weight of projectile	1 lb.	9.9 lb.

From this table it can be seen that the rocket has a low launching speed, a long period of acceleration and time of flight, and an excessive amount of gravity drop. These characteristics give the rocket a very curved trajectory when compared with the bullet. The rocket leaves the launcher (rocket rail) at a very low speed when compared with the bullet. Therefore, for a given distance covered, the time of flight for the rocket will be much greater than that of the bullet. Gravity drop is dependent upon time of flight, and so for a given distance covered, or range, the gravity drop of the rocket will be much greater than that of the bullet. This results in a very curved initial trajectory, as shown above.

However, the rocket is accelerating and, as its speed increases, the trajectory becomes flatter, but because of its initial curved path, the rocket is now accelerating along a path that is inclined downward from the original launcher line. Thus the vertical displacement of the rocket is not all true gravity drop, a percentage is accountable to the inclined acceleration path of the rocket. However, to the pilot this has to be treated as gravity drop.

Because of this type of trajectory it can be readily seen that the sight line would have to be depressed in order to predict the point of impact of the rocket. This depression, dependent upon the type of rocket, air temperature, dive angle, slant range, and aircraft airspeed at firing, may be obtained from rocket ballistic tables tabulated for the particular rocket and firing conditions. The depression is accurate only for certain firing conditions, and any change in one of the factors will result in an error. This is, or course, assuming the use of a fixed depressed sight. If a predicting sight is used, then there will be tolerances for changes of flight and firing conditions.

The accuracy of a rocket firing attack is effected by three major factors: dive angle, slant range, and airspeed. These three factors and their effect on the attack will be dealt with individually.

Effect of Dive Angle

EFFECTIVE WEIGHT. As already seen an aircraft in a dive requires less lift than when in straight and level flight. The required lift decreases as the angle of dive increases, therefore as the angle of dive increases so the aircraft's angle of attack decreases. This change of angle of attack alters the impact point of the rocket relative to the depressed sight line. This change gives an overshoot

Digitized by Google

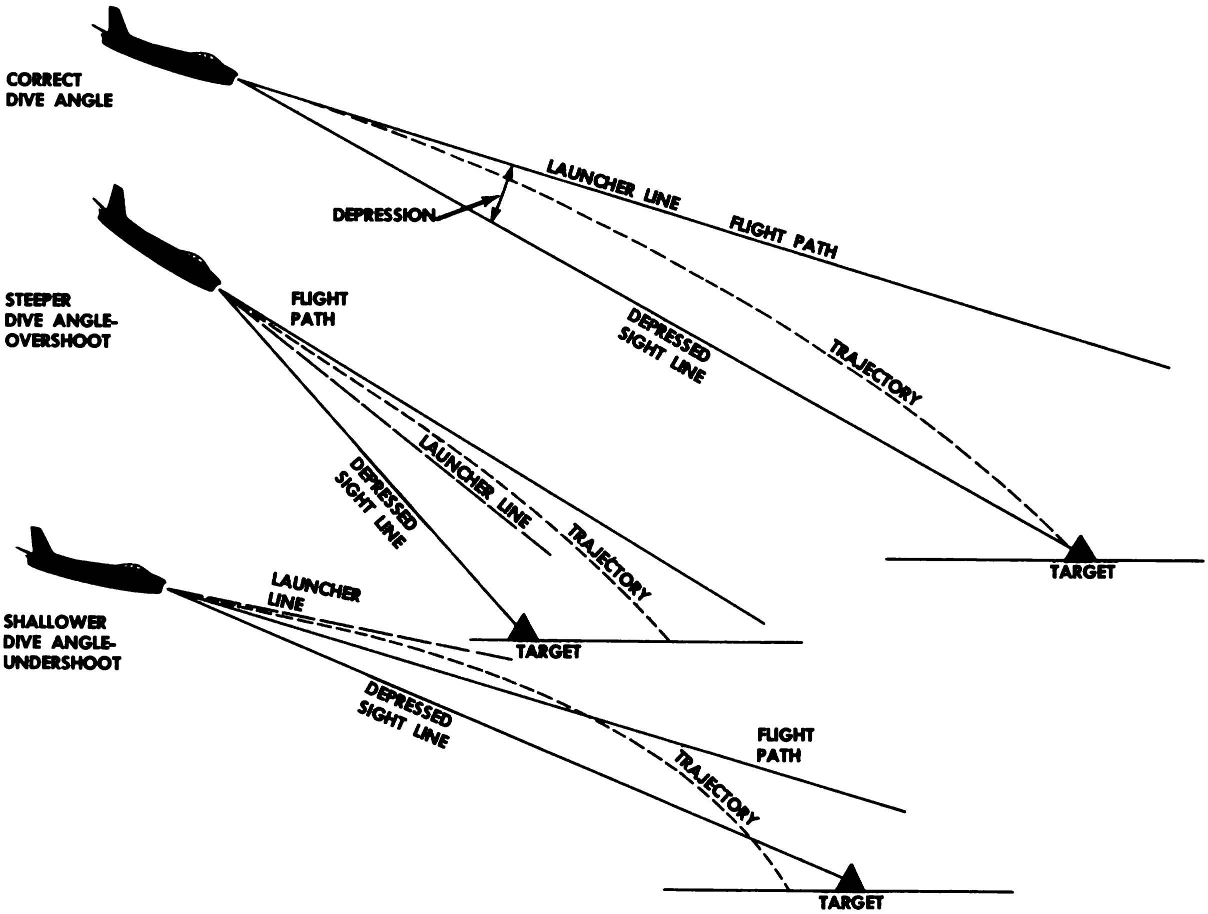

Effect of Dive Angle on Rocket Impact

effect when the dive angle is increased and an undershoot effect when the dive angle is decreased, as shown above.

Gravity drop allowance. The next illustration shows an aircraft in various dive angles firing a rocket at the same speed and at such ranges that the time of flight is the same. The gravity drop, or the vertical displacement of the rocket from its line of launch, is then the same for all these dives. It can be seen, however, that the angular subtension of this gravity drop varies at the aircraft with the change of dive angle. The sight depression required by aircraft B is less than that of A; C requires still less than B and so on. The sight depression is accurate for one dive angle only. If the attack is being made at steeper angle, then too much depression is being used, with the result that the rocket will overshoot the target. Conversely, attacking at a shallower angle will result in an undershoot error.

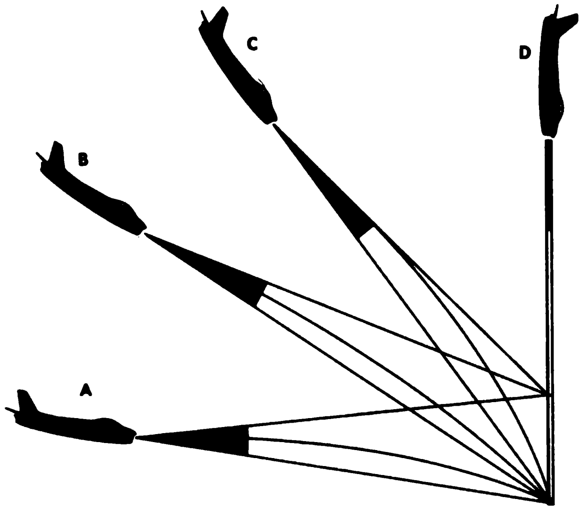

Effect of Dive Angle on Required Sight Depression

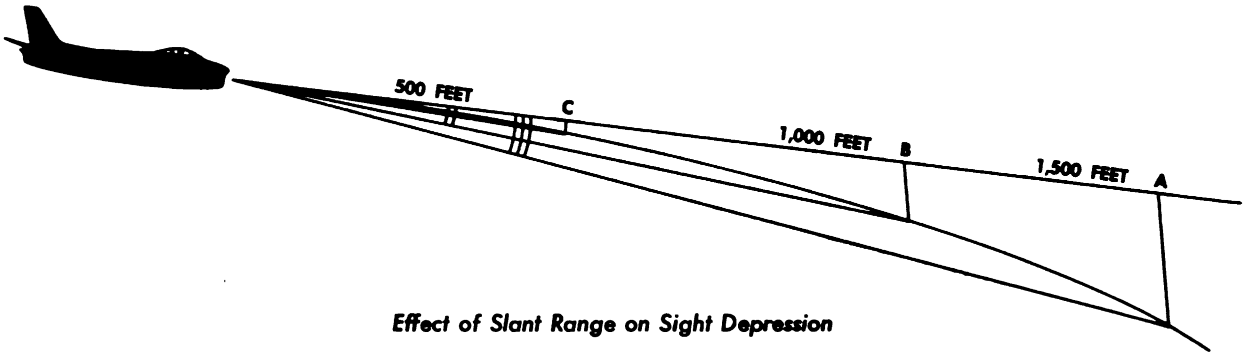

Effect of Slant Range on Sight Depression

Effect of Slant Range

The illustration above shows a rocket being fired at three different slant ranges. It can be seen that the sight depression necessary varies with each particular slant range. The depression required for range A is greater than that for B, and the depression for range B is again greater than that required for C. Thus, as range decreases so the necessary sight depression decreases. The sight depression is accurate for one slant range only. If the rocket is fired at a greater slant range, the depression will be insufficient, resulting in an undershoot. If the attack is made at a closer range less depression is required, resulting in an overshoot.

Effect of Airspeed

If a specific flight path is to be maintained, any change of airspeed will require a change of angle of attack. If airspeed is decreased, the angle of attack will be increased. If airspeed is increased, the angle of attack will be decreased. Whenever the angle of attack is changed, then the angle of the rocket launcher line relative to the flight path is changed. The rocket has a certain initial speed relative to the launcher when it is fired, therefore any change in angle of attack will have a resultant change in the line of departure of the rocket. Three examples are given in the next illustration.

The sight line is depressed a certain angle

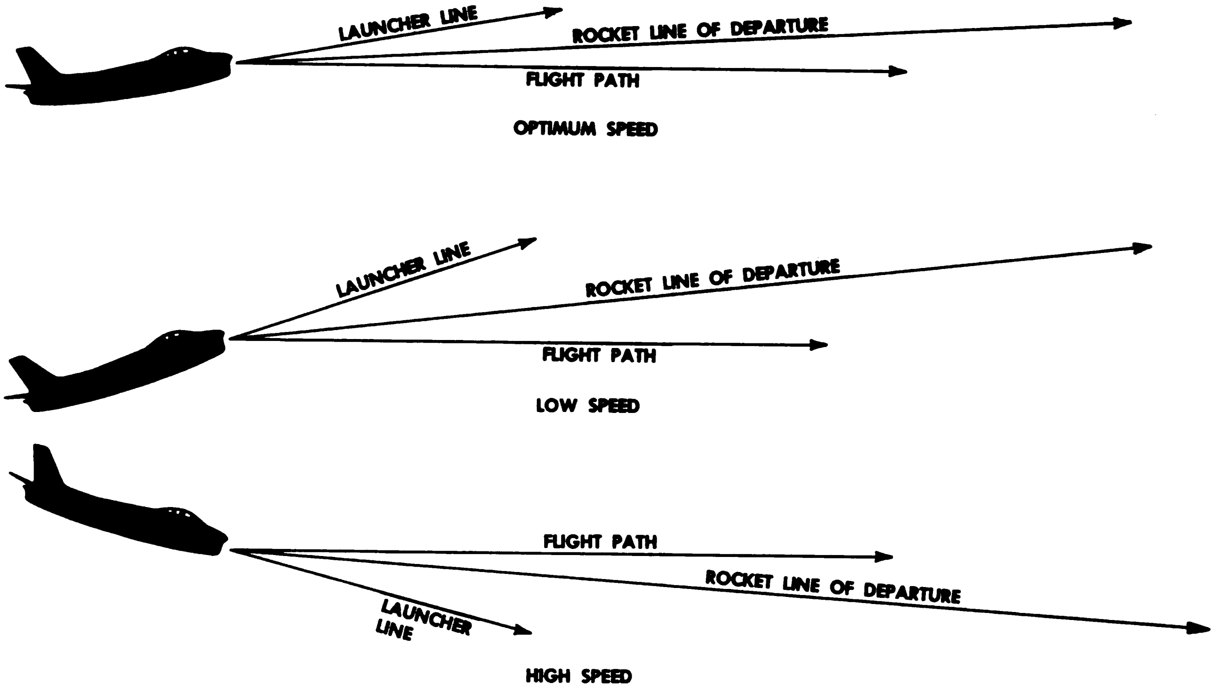

Effect of Airspeed on Rocket Departure

Digitized by Google

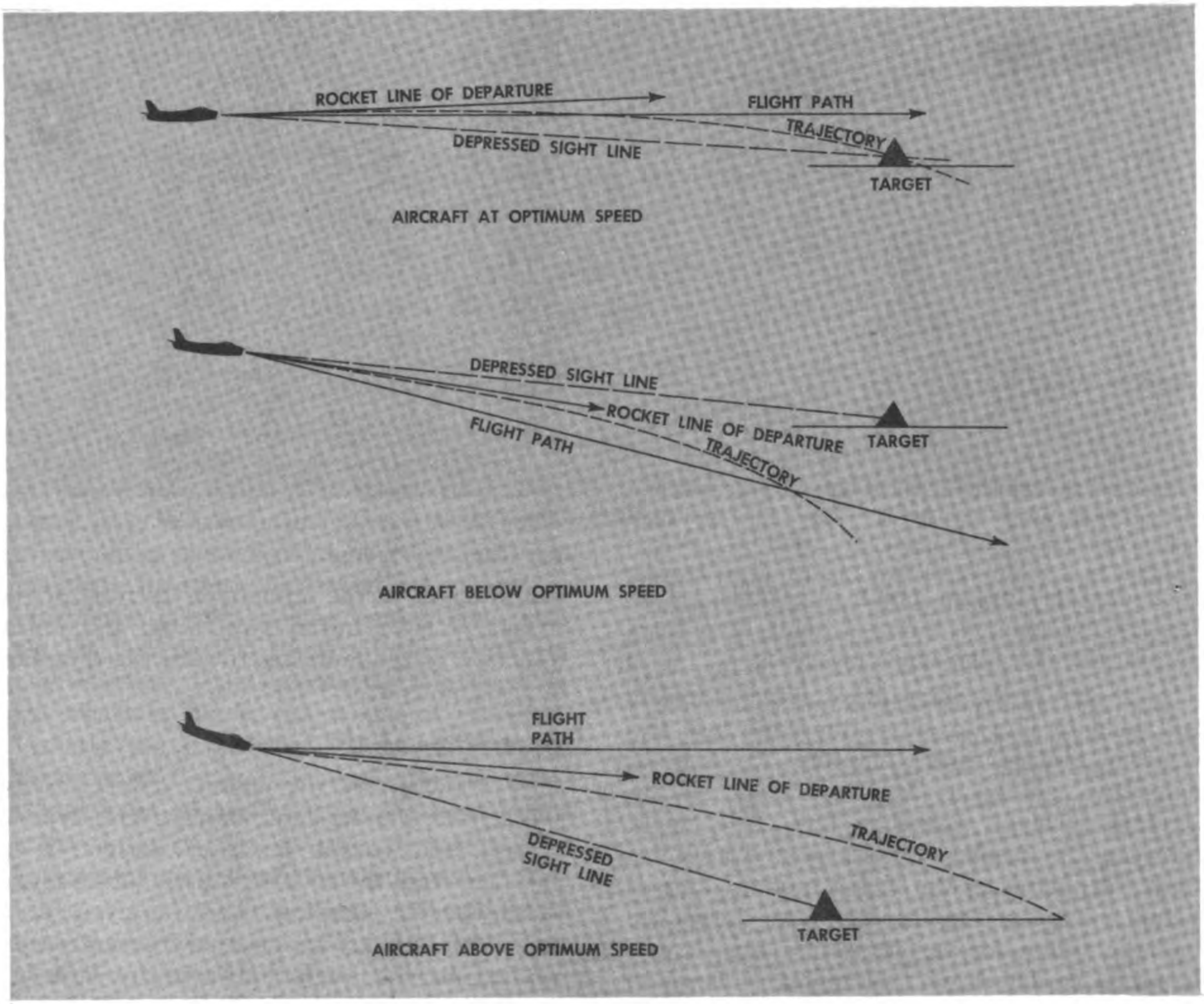

Effect of Airspeed on Rocket Impact

below the fuselage reference line, therefore as airspeed is decreased and so angle of attack increased, the sight depression relative to the flight path is decreased. The rocket's line of departure is a resultant of the firing velocity of the rocket along the launcher line and the aircraft's speed along the flight path. Thus with a change of airspeed requiring a change of angle of attack, the resultant line of departure of the rocket relative to the flight path is changed.

This causes an error relative to the depressed sight line. If speed is increased, the rocket impact will overshoot the depressed sight line. Conversely, if speed is decreased, the rocket impact will undershoot the depressed sight line. These effects are shown above.

"F" Factor

It has just been seen that when there is a variation in angle of attack, there is a change in the line of departure of the rocket relative to the fuselage reference line or launcher line. This is best understood by studying the flight characteristics of the rocket. The center of gravity of a rocket is near the front or near the head, and the center of pressure near the rear. Any air loads acting upon the rocket will act upon the center of pressure. When the rocket turns, it moves or revolves about its center of gravity.

The rocket is very similar to a dart. If a dart is thrown point down, it will stick in the dartboard normally. If it is thrown point first, it will of course stick in the board normally.

Digitized by Google

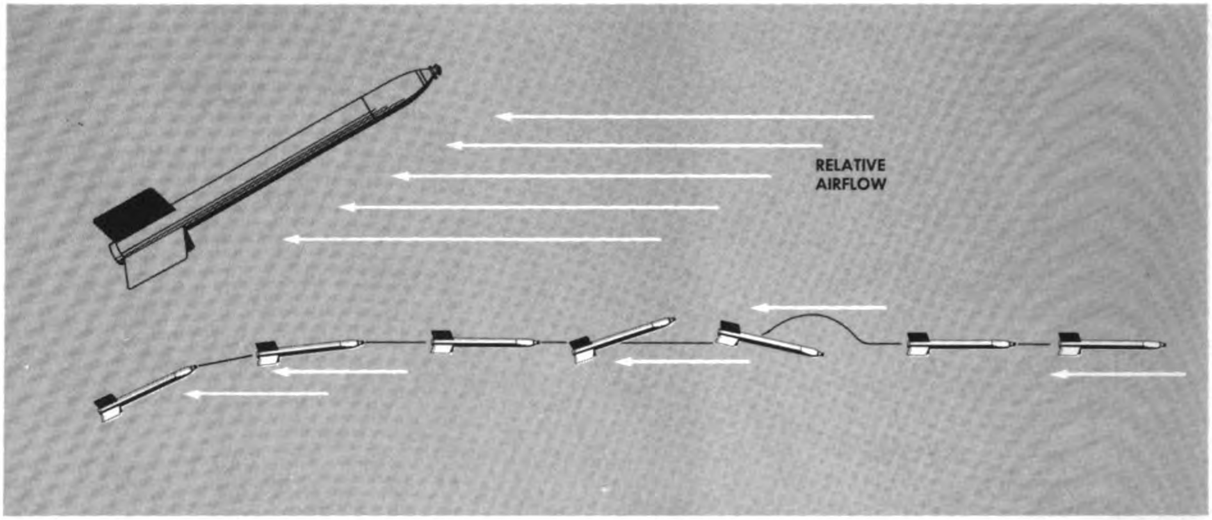

Rocket Stability

If a dart is thrown point uppermost, it is exactly the same as a rocket being fired from an aircraft at a high angle of attack.

As shown in the illustration above a rocket will tend to line up or weathervane into the relative airflow, and therefore its line of departure will be at a certain angle to the aircraft fuselage reference line. The angle between the fuselage reference line and the line of departure of the rocket must be known before the depression obtained from the rocket ballistic tables for the particular attack can be used. To determine this angle, use is made of "F" or "launching factor," also obtained from the ballistic tables. The "F" factor is the measure of the amount of turning of the rocket, due to initial yaw, from the initial direction of the launcher toward the direction of the flight path.

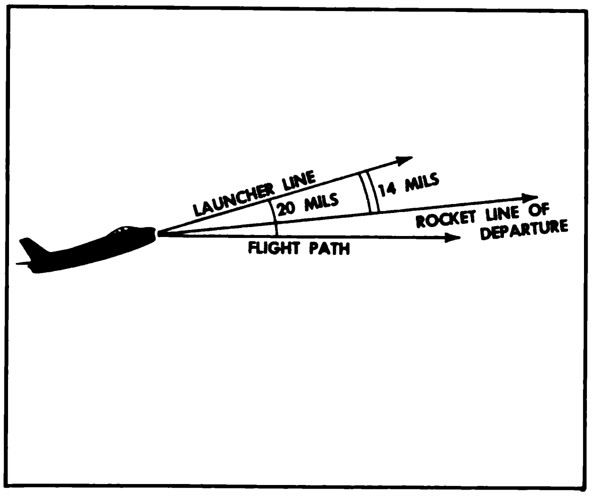

"F" Factor

Application of "F" Factor

"F" factor is dependent upon aircraft speed, rocket propellent temperature, type of rocket, and rocket launcher design. It is obtained from the rocket ballistic tables under these specific headings and is given as a decimal fraction. This decimal fraction is now applied to the angle between the launcher line and the flight path. This angle is shown in the drawing at left.

The angle in this case is 20 mils. For the particular firing conditions assume that the "F" factor from the tables is 0.7. By multiplying 20 mils by 0.7 it is calculated that the rocket departs 14 mils below the launcher line toward the flight path. The rocket always moves away from the launcher line toward the direction of the flight path, or into the relative airflow. The angle between the launcher line and the fuselage reference line is known, so therefore the angle at which the rocket departs relative to the fuselage reference line of the aircraft can be calculated.

It can be seen that with a noncomputing sight the sight depression is accurate for a particular combination of dive angle, slant range, and airspeed. Any deviation from these set conditions will result in an error.

Digitized by Google

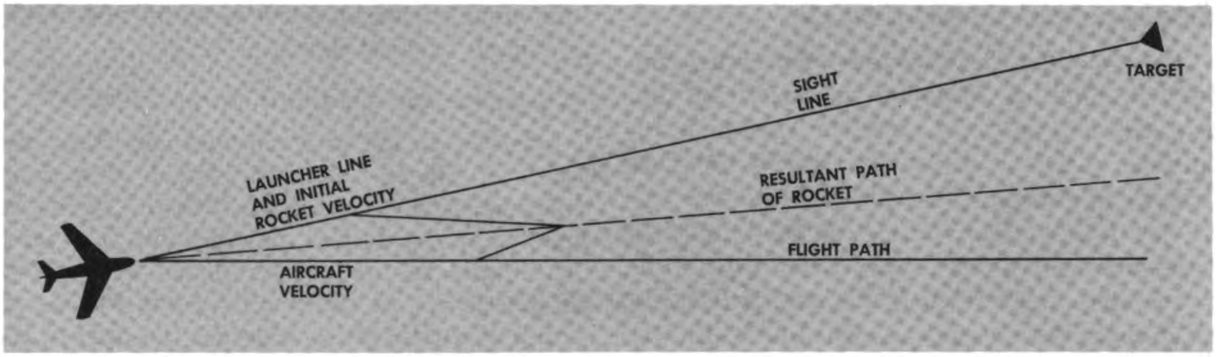

Effect of Skid on Rocket Impact

Effect of g Loading

As explained earlier, if the *g* loading of an aircraft is changed, then there will be a corresponding change of angle of attack. An increase in loading will result in an increase in the angle of attack, and conversely a decrease in loading will cause a decrease in the angle of attack. This increase and decrease in angle of attack due to the change of *g* loading is exactly the same as a change of angle of attack caused by a change of airspeed, and the resultant errors will be the same. An increase in *g* loading causing an increase in the angle of attack will result in the rocket undershooting the aiming point. Conversely, a decrease in *g* loading causing a decrease in angle of attack will result in the rocket overshooting the aiming point.

Effect of Skid

It was seen that skid has a detrimental effect on the accuracy of a bomb and a bullet. Skid has a similar effect on the accuracy of the rocket. If the aircraft is being flown with skid, there is an angular difference between the rocket launcher line and the aircraft flight path, and so when the rocket is fired it has two velocities imparted to it: initial rocket velocity and fighter velocity. The rocket assumes a line of departure that is a result of these two velocities, as shown in the drawing above.

The illustration below shows the effect of skid on all three weapons: the bomb, the bullet, and the rocket. The bomb continues along the flight path, as the only velocity that is imparted to it is aircraft speed. And with the sight on the target, the bomb has the maximum error of all three projectiles. The bullet's path is the result of aircraft velocity and muzzle velocity. As the latter is so very high when compared with aircraft speed, the bullet veers very little from the sight line. However, there is an error, but it is the smallest of all three projectiles. The rocket falls between the other two projectiles. It has a small "muzzle velocity" or launching speed, and its path is a resultant of this and aircraft velocity.

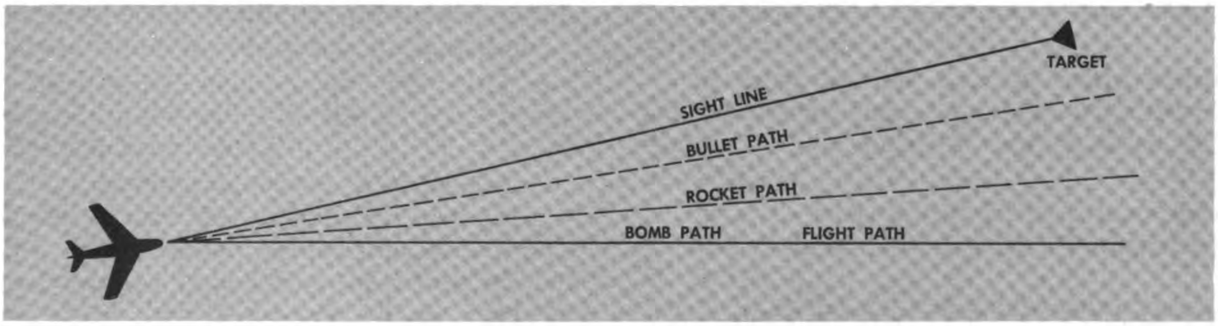

Effects of Skid on Bullet, Rocket, and Bomb Impact

Digitized by Google

Pilot Technique in Rocket Firing

As with all previous types of attacks, the best method of bringing the sight to the required aiming point after the turn-in is to initially place it below the target. As the attack progresses, allow the sight to rise up to the target. The reasons for making this type of attack have already been dealt with in the dive bombing phase. Remember that in all probability a depressed sight line will have to be used for the rocket attack. Ideally the sight should arrive at the required aiming point just before the release conditions are achieved, and the sight is steadied and the rocket fired.

Effect of Wind and Target Speed

The rocket is no different from the bomb or the bullet when fired in a wind or against a moving target. A correction will have to be made into wind and ahead of the moving target. This correction is equivalent to rocket time of flight multiplied by wind speed when fired in a wind, or rocket time of flight multiplied by target speed when fired against a moving target. The rule-of-thumb correction for wind or target speed is 1 mil per m.p.h. of target or wind speed.

Correction for Wind and Target Speed

For an attack in a no-wind condition, the sight is placed below the target after completion of the turn-in and then allowed to rise up to the desired aiming point. The same technique is used when firing in a wind. Remember that the aiming point will be up wind of the target to allow for the drift of the rocket after firing. Now after completion of the turn-in, the sight is placed below the target and more into wind than is necessary for the correct wind allowance. The sight now rises, due to the tendency of the aircraft to recover from the dive and also the fact that a depressed sight line is being used, and at the same time the sight moves downwind toward the target due to drift of the aircraft. The resultant movement is toward the desired aiming point, and ideally the sight arrives there just as firing conditions are achieved. At the time of firing, the wings of the aircraft must be laterally level as any bank will result in an undershoot due to the decreased depression and a line error in the direction of the bank.

Digitized by Google

CHAPTER 9

fighter weapons qualifications

The purpose of this chapter is to prescribe procedures for practice and qualification firing of fighter weapons by all units employing fighter aircraft in tactical training and operations. This chapter will also provide a standard method of tactical evaluating the effectiveness of fighter units and crews in the employment of fighter weapons, with the exception of air-to-air rocketry.

DEFINITIONS

The following are definitions of terms used in this chapter.

Aerial gunnery. Firing on a target, towed by another aircraft, with machine gun or cannon (automatic gun).

Broken strand. On a standard A-6B target a strand is considered to be a group of three threads. If one thread is broken, the strand is considered to be broken.

Event. Delivering specified ammunition into a target under conditions prescribed in this chapter either for practice or for qualification.

Event qualification course. The total prescribed qualification sorties in any event. (See definition below.)

Event qualification sortie. A sortie flown on which a score for qualification is fired in a given event. Event qualification sorties may be flown any time during the course without prestating that the score will be used for qualification.

Familiar. A term denoting that a pilot has been thoroughly briefed and has flown a minimum of two sorties of the specific events consistent with aircraft capability. Each sortie will be followed by a thorough critique.

Hang-up. The failure of a bomb to release.

High angle dive bombing. Dropping bombs into a target while in a high angle of dive (35° minimum).

High angle rocket firing. Firing rockets into a target while in a high angle dive (35° minimum).

High angle strafing. Firing into a target with machine guns or cannon while in a high angle of dive (35° minimum).

Invalid sortie. A sortie in any event which does not conform to the rules set down herein due to ammunition load or excessive number of passes. Invalid sorties can be recorded in training charts and reports but cannot be used for qualification.

Jam. The malfunction of a gun which cannot be cleared in the air.

Low angle dive bombing (formerly called glide bombing). Dropping bombs into a target while in a low angle of dive (between 20° and 35°).

Low angle rocket firing. Firing rockets into a target while in a low angle of dive (between 20° and 35°).

Low angle strafing. Firing at short ranges into a target with machine guns or cannon

Digitized by Google

while in a low angle of dive (not to exceed 35°).

Misfire. The failure of a rocket to fire.

Skip bombing. Dropping bombs into a vertical target while in level flight at a low altitude.

Valid sortie. A sortie in any event which is governed by the rules set down herein. (Can be used for qualification if desired.)

CLASSIFICATION AND QUALIFICATION SCORES

Proficiency classifications will cover the events as required by the mission of the organization. Qualifications will be given as expert, sharpshooter, or marksman in each event.

The events constituting qualification will be in accordance with AFM 50-7 or UTS 10-12 of 10-22, and are dependent upon the primary mission of the unit. In addition, every effort will be put forth to familiarize, to the greatest extent possible, all pilots in all events within the capabilities of the aircraft in use by an organization.

To arrive at an event qualification score, the scores of the required number of event qualification sorties are averaged, thereby obtaining the overall score for a specific event. The lowest average event qualification score will determine the overall degree of pilot qualification. For example, the required command fighter weapons qualification might include events A, B, C, D, and E. If Captain John Doe qualified in all events as expert, except in event E in which he qualifies as sharpshooter, his fighter weapons qualification is *sharpshooter*.

The prescribed number of event qualifications sorties for each event must be flown within a 30-day period.

The classifications with the necessary qualification scores are given below.

Records

The appropriate Air Force forms will be used for scoring and for maintenance of fighter weapons training records.

An entry will be made in the pilot's individual Flight Record (AF Form 5) whenever he qualifies in each event.

Example

Qualified as sharpshooter
Aerial gunnery (medium altitude)
30%
13 January 1956

Qualification Currency Period

Currency period for fighter weapons qualification is 1 year per event. Pilots will be considered qualified in an event for 1 year after the score is obtained. To be considered as qualified in fighter weapons, a pilot must be currently qualified in *all* events applicable to his unit. It is not required that the pilot be qualified in the aircraft peculiar to the unit,

	Expert	Sharpshooter	Marksman
Event A, Aerial Gunnery, 15,000-20,000 feet.....	35%	26%	17%
Event B, Aerial Gunnery, 25,000 feet and above..	25%	18%	12%
Event C, Low Angle Strafing..................	60%	37%	25%
Event D, High Angle Strafing..................	15 feet	25 feet	35 feet
Event E, Low Angle Rocket Firing................	35 feet	50 feet	65 feet
Event F, High Angle Rocket Firing................	30 feet	45 feet	60 feet
Event G, Skip Bombing......................	75%	62.5%	50%
Event H, Low Angle Dive Bombing...............	75 feet	100 feet	125 feet
Event I, High Angle Dive Bombing...............	60 feet	90 feet	115 feet

Digitized by Google

provided the pilot is transitioned to the aircraft.

Any time a pilot betters his score during an event qualification course (within a 30-day period) the new score will then be his event qualification score. It will be valid for a period of 1 year from the latest date the score was attained, and a new entry will be made in the pilot's Form 5.

PRACTICE AND QUALIFICATION RULES

The targets described in chapter 6 will be used for each air-to-ground event, and the standard 6- by 30-foot aerial target will be used for each air-to-air event.

The standard equipment installed in the aircraft will be used.

All ammunition will be charged against the pilot, provided no malfunction occurs. A malfunction does not void a sortie, provided that 75% of the ammunition is expended.

FOULS AND PENALTIES

One pass in excess of the prescribed number of passes, whether ordnance is discharged or not, will result in disqualification for that event qualification sortie.

An attack on a target, whether ordnance is discharged or not, during which any part of the aircraft passes below established minimum altitudes for that event will constitute a foul.

An attack on a target during which the pilot expends ordnance past the prescribed minimum firing range (foul lines) will constitute a foul.

The first foul will cause the score to be reduced by 10%. The second foul will cause the score to be reduced to zero, and no further attacks will be made by the pilot during that event sortie.

Minimum angle of fire during aerial gunnery is 15°, and the minimum firing range from the target is 600 feet. Holes made in a target in excess of 10 broken strands while firing caliber .50 ammunition will not be counted. A hole made in excess of 15 broken strands in length will reduce the event sortie score to zero. (Comparable data concerning 20-mm ammunition was not available at time of publication.)

Holes occurring in the last 5 feet of an aerial target, which exceed the above criteria, will be judged individually by the unit commander, taking into consideration target "whip," folding, and the like.

Gun camera film when available will determine the firing range during aerial gunnery, with the fouls penalized as previously mentioned.

EVENTS A AND B, AERIAL GUNNERY AT MEDIUM AND HEIGHT ALTITUDES

Ammunition

Two guns will be fired on each sortie. If M2 machine guns or M24 20-mm automatic guns are used, 60 rounds per gun will be loaded. If M3 machine guns or M39 (T160) 20-mm automatic guns are used, 90 rounds per gun will be loaded.

Number of Sorties

Two qualifying sorties will be flown in event A, and 2 qualifying sorties will be flown in event B.

Number of Passes

A maximum of 8 passes will be permitted each event sortie.

Approach

The high side approach will be utilized.

Method of Scoring

Each valid hole in the target will be considered one hit. The number of hits will be divided by rounds loaded to arrive at a percentage score. If a jam is experienced, the number of hits will be divided by rounds fired, providing at least 75% of the ammunition has been expended.

EVENT C, LOW ANGLE STRAFING

Ammunition

Two guns will be fired on each sortie. If M2 machine guns or M24 20-mm automatic guns are used, 60 rounds per gun will be loaded. If M3 machine guns or M39 (T160) 20-mm automatic guns are used, 90 rounds per gun will be loaded.

Digitized by Google

Number of Sorties

Three event C qualifying sorties will be flown.

Number of Passes

A maximum of 8 passes will be permitted on each sortie.

Approach

Qualification low angle strafing will be accomplished on the low angle strafing range described in chapter 6. A 1,200-foot foul line and a 100-foot minimum recovery altitude will be utilized for low angle strafing.

Method of Scoring

Each valid hole in the 15- by 15-foot target will be considered a hit. If colored ammunition is used, plain holes will not be scored. Obvious ricochets will not be scored. The total number of hits will be divided by total rounds loaded to arrive at a percentage score. If a jam is experienced, the number of hits will be divided by rounds fired, providing at least 75% of the ammunition has been expended.

EVENT D, HIGH ANGLE STRAFING

Ammunition

Two guns will be fired on each sortie. If M2 machine guns or M24 20-mm automatic guns are used, 60 rounds per gun will be loaded. If M3 machine guns, or M39 (T160) 20-mm automatic guns are used, 90 rounds per gun will be loaded.

Number of Sorties

Three event D qualifying sorties will be flown.

Number of Passes

A maximum of 8 passes and a minimum of 6 firing passes will be made for scoring. Each pass during which the pilot fires will be scored.

Approach

High angle strafing will be accomplished on the high angle strafing range described in chapter 6. A minimum recovery altitude of 1,000 feet will be utilized.

Method of Scoring

Strikes will be scored from the ground. The *first impact point* of the rounds will be plotted. The score will then be computed as the average footage error from the bull's-eye.

EVENT E, LOW ANGLE ROCKET FIRING

Ammunition

Four rockets will be loaded each sortie.

Number of Sorties

Two event E qualifying sorties will be flown.

Number of Passes

A maximum of 5 passes per sortie will be permitted.

Approach

Low angle rocket firing will be accomplished on the high angle strafing and rocketry range described in chapter 6. A minimum recovery altitude of 500 feet will be utilized.

NOTE: If a misfire is encountered, the pilot will proceed with the event sortie and attempt to fire the remaining rockets within the 5 passes.

Method of Scoring

Strikes will be scored from the ground. The score will then be computed as the average footage error from the bull's-eye. If a misfire is experienced, at least 3 of the 4 rockets must be fired to count as a valid event qualification sortie.

EVENT F, HIGH ANGLE ROCKET FIRING

Ammunition

Four rockets will be loaded for each sortie.

Number of Sorties

Two event F qualifying sorties will be flown.

Number of Passes

A maximum of 5 passes per sortie will be permitted.

NOTE: If a misfire is encountered, the pilot will proceed with the event sortie and attempt to fire the remaining rockets within the 5 passes.

Digitized by Google

Approach

High angle rocket firing will be accomplished on the high angle strafing and rocketry range described in chapter 6. A minimum recovery altitude of 1,000 feet will be utilized.

Method of Scoring

Strikes will be scored from the ground. The score will then be computed as the average footage error from the bull's-eye. If a misfire is experienced, at least 3 of the 4 rockets must be fired to count as a valid event qualification sortie.

EVENT G, SKIP BOMBING

Ammunition

Four bombs will be loaded for each sortie.

Number of Sorties

Two event G qualifying sorties will be flown.

Number of Passes

A maximum of 5 passes per sortie will be permitted.

Minimum Release Range

A 750-foot minimum release range will be enforced.

NOTE: All bombing sorties will be conducted with aircraft carrying 4 bombs. If a carrier capable of carrying 4 bombs is not available, the following rules apply: 2 bombs per sortie, 4 sorties for qualification, and 3 passes maximum per sortie.

Approach

Skip bombing will be accomplished on the skip bombing range described in chapter 6. The minimum altitude for skip bombing will be 35 feet.

Method of Scoring

Any bomb that hits the target directly or skips into the target after striking the ground once will be scored a hit. The number of hits obtained will be divided by total number of bombs dropped to arrive at a percentage score. If a hang-up is experienced, at least 3 bombs must be dropped to constitute a valid mission.

NOTE: During event qualifying sorties in which only 2 bombs are carried, both bombs must be dropped during 3 passes to constitute a valid event qualifying sortie.

EVENT H, LOW ANGLE DIVE BOMBING

Ammunition

Four bombs will be loaded for each sortie.

Number of Sorties

Two event H qualifying sorties will be flown.

Number of Passes

A maximum of 5 passes per sortie will be permitted.

NOTE: All bombing sorties will be conducted with aircraft carrying 4 bombs. If a carrier capable of carrying 4 bombs is not available, the following rules apply: 2 bombs per sortie, 4 sorties for qualification, and 3 passes maximum per sortie.

Approach

Low angle dive bombing will be accomplished on the high angle strafing and rocketry range described in chapter 6, in order to use the circular scoring area. The minimum recovery altitude will be 500 feet. If a hang-up is experienced, at least 3 bombs must be dropped to constitute a valid mission.

Methods of Scoring

Strikes will be scored from the ground. The score will then be computed as average footage error from the center of the target.

NOTE: During event qualifying sorties in which only 2 bombs are carried, both bombs must be dropped during 3 passes to constitute a valid event qualifying sortie.

EVENT I, HIGH ANGLE DIVE BOMBING

Ammunition

Four bombs will be loaded for each sortie.

Number of Sorties

Two event I qualifying sorties will be flown.

Number of Passes

A maximum of 5 passes per sortie will be permitted.

Digitized by Google

NOTE: All bombing sorties will be conducted with aircraft carrying 4 bombs. If a carrier capable of carrying 4 bombs is not available, the following rules apply: 2 bombs per sortie, 4 sorties for qualification, and 3 passes maximum per sortie.

Approach

Event I bombing will be accomplished on the high angle strafing and rocketry range described in chapter 6. The minimum recovery altitude will be 1,000 feet.

Method of Scoring

Strikes will be scored from the ground. The score will then be computed as average footage error from the center of the target. At least 3 bombs must be dropped to constitute a valid mission.

NOTE: During event qualifying sorties in which only 2 bombs are carried, both bombs must be dropped during 3 passes to constitute a valid event qualifying sortie.

Digitized by Google

appendix I

AMMUNITION BALLISTIC DATA

CALIBER .50
AP M2
Muzzle Velocity 2,700 feet per second

Range is the distance from a stationary point (the muzzle of the gun at time of fire) to the projectile at every instant.
AZIMUTH 0 mils ZENITH 1,600 mils
Guns mounted in aircraft in horizontal flight.

			TOP LINE: VERTICAL DEFLECTION IN INCHES BOTTOM LINE: TIME OF FLIGHT IN SECONDS														
Air Den-sity	True Air-speed		RANGE IN FEET														
	knots	m.p.h.	200	400	600	800	1000	1200	1400	1600	1800	2000	2200	2400	2600	2800	3000
1.0	0	0	1	4	10	18	29	43	60	80	104	132	164	200	241	287	339
			0.07	0.15	0.23	0.31	0.40	0.49	0.58	0.67	0.77	0.87	0.98	1.09	1.20	1.32	1.44
1.0	131	150	1	4	9	16	25	37	51	69	89	112	139	169	203	224	285
			0.07	0.13	0.22	0.29	0.37	0.45	0.53	0.62	0.71	0.80	0.90	1.00	1.10	1.21	1.32
1.0	261	300	1	4	8	14	22	32	45	60	77	97	119	145	174	207	244
			0.06	0.13	0.20	0.27	0.34	0.42	0.50	0.58	0.66	0.74	0.83	0.92	1.01	1.11	1.21
1.0	392	450	1	3	7	12	19	28	39	52	67	84	104	127	152	180	212
			0.06	0.13	0.19	0.26	0.32	0.39	0.46	0.53	0.61	0.69	0.77	0.86	0.95	1.04	1.13
0.8	131	150	1	4	9	16	25	36	50	66	85	107	132	160	191	226	264
			0.07	0.14	0.21	0.28	0.36	0.44	0.52	0.60	0.69	0.78	0.87	0.96	1.05	1.15	1.25
0.8	261	300	1	4	8	14	21	31	43	57	74	93	114	138	165	194	227
			0.07	0.13	0.20	0.27	0.34	0.41	0.48	0.56	0.65	0.72	0.81	0.89	0.97	1.06	1.15
0.8	392	450	1	3	7	12	19	27	37	50	64	80	99	120	143	169	198
			0.06	0.12	0.18	0.24	0.31	0.38	0.45	0.52	0.60	0.68	0.75	0.83	0.91	0.99	1.07
0.6	131	150	1	4	9	16	24	35	48	64	82	102	125	151	180	211	246
			0.07	0.14	0.21	0.28	0.35	0.43	0.51	0.59	0.67	0.75	0.84	0.92	1.01	1.09	1.18
0.6	261	300	1	4	8	14	22	31	42	56	71	89	109	131	156	182	212
			0.07	0.13	0.20	0.27	0.33	0.40	0.47	0.54	0.62	0.70	0.77	0.85	0.93	1.01	1.10
0.6	392	450	1	3	7	12	19	27	37	49	62	77	95	114	135	159	185
			0.06	0.12	0.18	0.24	0.31	0.38	0.45	0.51	0.58	0.65	0.72	0.79	0.86	0.94	1.02
0.4	131	150	1	4	8	15	23	34	47	62	79	98	119	143	169	198	230
			0.07	0.14	0.21	0.28	0.35	0.42	0.49	0.57	0.65	0.73	0.80	0.88	0.96	1.04	1.13
0.4	261	300	1	4	8	14	21	30	41	54	69	86	105	126	149	173	200
			0.07	0.13	0.20	0.27	0.33	0.40	0.47	0.54	0.61	0.68	0.76	0.82	0.90	0.97	1.05
0.4	392	450	1	3	7	12	19	27	36	47	60	75	91	109	129	150	174
			0.06	0.12	0.18	0.24	0.31	0.37	0.43	0.50	0.56	0.63	0.70	0.77	0.84	0.92	0.97
0.2	131	150	1	4	8	15	24	34	47	61	78	96	116	138	162	189	217
			0.07	0.14	0.21	0.28	0.35	0.42	0.49	0.56	0.63	0.70	0.78	0.85	0.93	1.00	1.08
0.2	261	300	1	4	8	14	22	31	42	55	69	85	102	121	142	166	191
			0.07	0.13	0.20	0.26	0.33	0.39	0.46	0.52	0.59	0.66	0.72	0.79	0.86	0.93	1.00
0.2	392	450	1	3	8	13	19	27	37	48	61	75	90	107	125	145	166
			0.06	0.12	0.18	0.24	0.30	0.36	0.42	0.49	0.55	0.61	0.68	0.74	0.80	0.87	0.93

Source of information: USAF Fighter Weapons School, Nellis Air Force Base

Vertical Deflection and Time of Flight for Caliber .50 Training Ammunition AP M2

CALIBER .50
M8 API
Muzzle Velocity 2,870 feet per second

Range is the distance from a stationary point (the muzzle of the gun at time of fire) to the projectile at every instant.
AZIMUTH 0 mils ZENITH 1,600 mils
Guns mounted in aircraft in horizontal flight.

TOP LINE: VERTICAL DEFLECTION IN INCHES BOTTOM LINE: TIME OF FLIGHT IN SECONDS

Air Density	True Air-Speed		RANGE IN FEET														
	knots	m.p.h.	200	400	600	800	1000	1200	1400	1600	1800	2000	2200	2400	2600	2800	3000
1.0	0	0	1	4	9	17	26	39	54	72	93	118	146	179	216	257	304
			0.07	0.14	0.22	0.30	0.38	0.46	0.55	0.64	0.73	0.83	0.93	1.03	1.14	1.25	1.37
1.0	131	150	1	4	8	14	22	33	46	62	80	101	125	153	184	219	258
			0.07	0.13	0.20	0.27	0.35	0.43	0.51	0.59	0.67	0.76	0.85	0.95	1.05	1.15	1.25
1.0	261	300	1	3	7	12	19	28	39	53	69	87	108	131	158	188	221
			0.06	0.12	0.19	0.26	0.33	0.40	0.47	0.55	0.63	0.71	0.79	0.88	0.97	1.06	1.16
1.0	392	450	1	3	6	11	17	25	35	46	60	76	94	114	137	163	192
			0.06	0.12	0.18	0.24	0.30	0.37	0.44	0.51	0.58	0.66	0.74	0.82	0.90	0.99	1.08
0.8	131	150	1	4	8	14	22	32	44	59	76	96	119	144	172	203	238
			0.07	0.13	0.20	0.27	0.35	0.42	0.49	0.57	0.65	0.73	0.82	0.91	1.00	1.09	1.19
0.8	261	300	1	3	6	12	19	28	39	51	66	83	102	124	148	175	205
			0.06	0.13	0.19	0.26	0.32	0.39	0.46	0.54	0.61	0.68	0.76	0.84	0.92	1.01	1.10
0.8	392	450	1	3	6	10	16	24	34	45	58	73	89	108	129	153	179
			0.06	0.12	0.18	0.24	0.30	0.36	0.43	0.50	0.57	0.64	0.71	0.78	0.86	0.94	1.02
0.6	131	150	1	4	8	14	21	31	43	57	73	92	113	136	162	190	221
			0.07	.013	0.20	0.27	0.34	0.41	0.48	0.56	0.63	0.71	0.79	0.87	0.95	1.03	1.12
0.6	261	300	1	3	6	11	18	27	38	50	64	80	98	118	140	165	192
			0.06	0.13	0.19	0.25	0.32	0.38	0.45	0.52	0.59	0.66	0.74	0.81	0.89	0.96	1.04
0.6	392	450	1	3	6	11	17	24	33	44	56	70	86	103	122	144	167
			0.05	0.11	0.17	0.23	0.29	0.36	0.42	0.49	0.55	0.62	0.69	0.76	0.83	0.90	0.97
0.4	131	150	1	4	8	14	22	31	42	56	71	88	108	129	153	179	207
			0.07	0.13	0.20	0.27	0.33	0.40	0.47	0.54	0.62	0.69	0.77	0.84	0.92	0.99	1.07
0.4	261	300	1	3	6	11	18	27	37	48	61	76	93	112	132	155	179
			0.06	0.12	0.18	0.24	0.31	0.38	0.44	0.51	0.57	0.64	0.71	0.78	0.85	0.92	0.99
0.4	392	450	1	3	6	10	16	23	32	42	54	67	82	98	116	136	157
			0.06	0.11	0.17	0.23	0.29	0.35	0.41	0.48	0.54	0.60	0.67	0.73	0.80	0.86	0.93
0.2	131	150	1	3	7	13	21	30	41	54	68	84	102	122	144	167	193
			0.07	0.13	0.20	0.27	0.33	0.40	0.47	0.53	0.60	0.67	0.74	0.81	0.88	0.95	1.02
0.2	261	300	1	3	6	11	18	26	36	46	59	73	89	106	125	146	168
			0.06	0.12	0.18	0.24	0.31	0.37	0.43	0.50	0.56	0.62	0.69	0.75	0.82	0.88	0.95
0.2	392	450	1	3	6	10	16	23	31	41	52	64	78	93	110	127	147
			0.06	0.11	0.17	0.23	0.29	0.35	0.41	0.46	0.52	0.58	0.64	0.70	0.76	0.83	0.89

Source of information: USAF Fighter Weapons School, Nellis Air Force Base

Vertical Deflection and Time of Flight for Caliber .50 M8 API

Muzzle Velocity, 2,900 feet per second **C5.1 = .437**

Altitude (feet)	Present Range (feet)	True Airspeed									
		0		150 m.p.h./131 knots		300 m.p.h./261 knots		450 m.p.h./392 knots		600 m.p.h./523 knots	
		Time of flight (seconds)	Drop (inches)	Time of flight (seconds)	Drop (inches)	Time of flight (seconds)	Drop (inches)	Time of flight (seconds)	Drop (inches)	Time of flight (seconds)	Drop (inches)
0	200	.070	.9	.065	.8	0.61	.7	0.57	.6	.054	.5
	400	.142	3.8	.132	3.3	.123	2.9	.115	2.5	.109	2.2
	600	.217	8.8	.201	7.6	.188	6.6	.176	5.8	.165	5.1
	800	.294	16.0	.272	13.7	.254	11.9	.238	10.5	.223	9.3
	1000	.374	25.5	.346	21.9	.322	19.1	.301	16.7	.283	14.8
	1200	.456	37.6	.422	32.3	.393	28.0	.367	24.6	.345	21.7
	1400	.542	52.4	.502	45.0	.465	39.0	.435	34.1	.408	30.1
	1600	.630	70.2	.582	60.1	.541	52.0	.505	45.5	.473	40.1
	1800	.722	91.0	.666	77.8	.618	67.3	.577	58.8	.540	51.8
	2000	.817	115.2	.753	98.4	.698	85.0	.651	74.2	.610	65.3
	2200	.916	143.1	.843	122.0	.781	105.3	.728	91.8	.681	80.7
	2400	1.019	174.9	.937	148.9	.867	128.4	.807	111.8	.755	98.2
	2600	1.126	210.9	1.034	179.3	.957	154.3	.890	134.2	.831	117.8
	2800	1.237	251.6	1.136	213.6	1.049	183.5	.975	159.4	.910	139.8
	3000	1.353	297.2	1.241	251.9	1.145	216.1	1.063	187.5	.992	164.2
	3200	1.474	348.3	1.350	294.6	1.245	252.4	1.154	218.6	1.076	191.2
	3400	1.601	405.3	1.464	342.2	1.348	292.7	1.249	253.2	1.163	221.2
	3600	1.732	468.6	1.583	395.0	1.456	337.3	1.348	291.3	1.254	254.1
	3800	1.869	538.9	1.707	453.5	1.569	386.6	1.450	333.3	1.348	290.4
	4000	2.012	616.7	1.836	518.2	1.686	440.9	1.557	379.6	1.446	330.2
7000	200	.070	.9	0.65	.8	.061	.7	.057	.6	.053	.5
	400	.141	3.8	.131	3.3	.122	2.8	.115	2.5	.108	2.2
	600	.215	8.7	.199	7.5	.186	6.5	.174	5.7	.164	5.1
	800	.290	15.7	.269	13.5	.251	11.7	.235	10.3	.221	9.1
	1000	.367	24.9	.340	21.5	.317	18.7	.297	16.4	.279	14.5
	1200	.447	36.6	.414	31.4	.385	27.3	.360	23.9	.339	21.2
	1400	.528	50.7	.489	43.5	.455	37.8	.425	33.1	.400	29.3
	1600	.612	67.4	.566	57.9	.526	50.2	.492	44.0	.462	38.8
	1800	.698	86.9	.645	74.5	.600	64.6	.560	56.6	.526	49.9
	2000	.786	109.4	.726	93.7	.675	81.2	.630	71.0	.591	62.6
	2200	.877	135.0	.810	115.5	.752	99.9	.702	87.3	.658	77.0
	2400	.971	163.8	.896	140.0	.831	121.1	.775	105.7	.726	93.1
	2600	1.068	196.2	.984	167.5	.912	144.7	.850	126.3	.796	111.1
	2800	1.167	232.3	1.075	198.1	.996	170.9	.928	149.0	.868	131.1
	3000	1.270	272.3	1.169	232.0	1.082	200.0	1.007	174.2	.942	153.0
	3200	1.376	316.6	1.265	269.3	1.170	231.9	1.089	201.8	1.018	177.2
	3400	1.486	365.3	1.364	310.4	1.261	267.0	1.172	232.1	1.095	203.6
	3600	1.599	418.8	1.467	355.3	1.355	305.3	1.259	265.1	1.175	232.4
	3800	1.716	477.4	1.573	404.5	1.451	347.1	1.347	301.1	1.257	263.7
	4000	1.837	541.4	1.682	458.1	1.551	392.6	1.438	340.2	1.341	297.7
16000	200	.070	.9	.065	.8	.060	.7	.057	.6	.053	.5
	400	.140	3.8	.130	3.2	.122	2.8	.114	2.5	.107	2.2
	600	.213	8.6	.197	7.4	.184	6.4	.173	5.6	.162	5.0
	800	.286	15.4	.266	13.3	.248	11.6	.232	10.2	.218	9.0
	1000	.361	24.4	.335	21.0	.312	18.3	.293	16.1	.275	14.2
	1200	.438	35.6	.406	30.6	.378	26.6	.354	23.4	.333	20.7
	1400	.515	49.0	.478	42.2	.445	36.7	.417	32.2	.392	28.5
	1600	.595	64.9	.551	55.8	.513	48.5	.480	42.5	.451	37.6
	1800	.676	83.2	.626	71.5	.582	62.1	.545	54.5	.512	48.1
	2000	.758	104.2	.702	89.5	.653	77.7	.611	68.1	.573	60.1
	2200	.843	127.8	.779	109.7	.725	95.1	.678	83.3	.636	73.6
	2400	.929	154.2	.859	132.2	.798	114.7	.746	100.4	.700	88.6
	2600	1.017	183.5	.939	157.3	.873	136.3	.815	119.2	.765	105.2
	2800	1.106	215.9	1.022	184.9	.949	160.1	.886	140.0	.831	123.5
	3000	1.198	251.5	1.106	215.2	1.027	186.2	.958	162.7	.898	143.4
	3200	1.292	290.3	1.192	248.3	1.106	214.7	1.032	187.5	.967	165.2
	3400	1.388	332.7	1.279	284.2	1.187	245.6	1.106	214.4	1.036	188.8
	3600	1.486	378.6	1.369	323.2	1.269	279.1	1.183	243.5	1.107	214.3
	3800	1.586	428.4	1.460	365.4	1.353	315.3	1.260	274.9	1.179	241.7
	4000	1.688	482.1	1.554	410.8	1.439	354.3	1.339	308.6	1.253	271.3

Source of information: USAF Fighter Weapons School, Nellis Air Force Base

Gravity Drop and Time of Flight for Caliber .50 M20 API-T

Digitized by Google

Muzzle Velocity, 2,900 feet per second											C5.1—.437
Altitude	Present Range	0		True Airspeed							
				150 m.p.h./131 knots		300 m.p.h./261 knots		450 m.p.h./392 knots		600 m.p.h./523 knots	
(feet)	(feet)	Time of flight (seconds)	Drop (inches)	Time of flight (seconds)	Drop (inches)	Time of flight (seconds)	Drop (inches)	Time of flight (seconds)	Drop (inches)	Time of flight (seconds)	Drop (inches)
28000	200	.069	.9	.064	.8	.060	.7	.056	.6	.053	.5
	400	.140	3.7	.130	3.2	.121	2.8	.114	2.5	.107	2.2
	600	.211	8.4	.196	7.3	.183	6.4	.171	5.6	.161	4.9
	800	.283	15.1	.262	13.1	.245	11.4	.230	10.0	.216	8.9
	1000	.356	23.9	.330	20.6	.308	17.9	.289	15.8	.272	14.0
	1200	.429	34.7	.398	29.9	.372	26.0	.348	22.9	.328	20.2
	1400	.504	47.6	.468	41.0	.436	35.7	.409	31.4	.384	27.8
	1600	.580	62.7	.538	54.0	.501	47.0	.470	41.3	.442	36.5
	1800	.656	80.1	.609	68.9	.567	60.0	.531	52.6	.499	46.6
	2000	.734	99.7	.680	85.8	.634	74.6	.594	65.5	.558	57.9
	2200	.813	121.7	.753	104.7	.702	91.0	.657	79.9	.617	70.6
	2400	.892	146.1	.827	125.7	.770	109.2	.721	95.8	.677	84.7
	2600	.973	173.0	.901	148.7	.839	129.2	.785	113.3	.738	100.2
	2800	1.055	202.5	.977	174.0	.909	151.1	.850	132.5	.799	117.0
	3000	1.138	234.6	1.053	201.5	.980	174.9	.917	153.3	.861	135.4
	3200	1.222	269.3	1.131	231.2	1.052	200.6	.983	175.8	.923	155.2
	3400	1.307	306.9	1.209	263.3	1.125	228.4	1.051	200.0	.987	176.6
	3600	1.394	347.3	1.289	297.8	1.198	258.3	1.120	226.1	1.051	199.5
	3800	1.481	390.6	1.369	334.8	1.273	290.2	1.189	254.0	1.115	224.1
	4000	1.571	436.9	1.451	374.4	1.348	324.2	1.259	283.7	1.181	250.3
44000	200	.069	.9	.064	.8	.060	.7	.056	.6	.053	.5
	400	.139	3.7	.129	3.2	.121	2.8	.113	2.4	.106	2.2
	600	.209	8.4	.194	7.2	.181	6.3	.170	5.5	.160	4.9
	800	.280	14.9	.260	12.9	.243	11.2	.228	9.9	.214	8.8
	1000	.351	23.5	.326	20.3	.304	17.6	.285	15.5	.269	13.8
	1200	.423	34.0	.393	29.3	.366	25.5	.344	22.5	.323	19.9
	1400	.495	46.5	.460	40.1	.429	34.9	.402	30.7	.378	27.2
	1600	.568	61.0	.527	52.6	.492	45.8	.461	40.3	.434	35.7
	1800	.641	77.6	.595	66.9	.555	58.3	.520	51.2	.490	45.3
	2000	.715	96.2	.664	83.0	.619	72.2	.580	63.5	.546	56.2
	2200	.789	117.0	.732	100.9	.683	87.8	.640	77.2	.602	68.3
	2400	.864	140.0	.802	120.6	.748	105.0	.701	92.2	.659	81.7
	2600	.940	165.1	.872	142.2	.813	123.8	.761	108.7	.716	96.3
	2800	1.016	192.4	.942	165.7	.878	144.2	.823	126.7	.774	112.1
	3000	1.093	222.0	1.013	191.2	.944	166.4	.884	146.1	.832	129.3
	3200	1.170	253.9	1.085	218.6	1.011	190.2	.947	167.0	.890	147.7
	3400	1.248	288.1	1.157	248.0	1.078	215.7	1.009	189.3	.949	167.5
	3600	1.326	324.7	1.229	279.4	1.145	242.9	1.072	213.2	1.008	188.6
	3800	1.405	363.6	1.302	312.8	1.213	272.0	1.135	238.6	1.067	211.1
	4000	1.485	405.0	1.376	348.3	1.281	302.8	1.199	265.6	1.127	234.9

Source of information: USAF Fighter Weapons School, Nellis Air Force Base

Gravity Drop and Time of Flight for Caliber .50 API-T, M20

Digitized by Google

ALTITUDE IN FEET	RELATIVE AIR DENSITY	TRUE AIR-SPEED knots	TRUE AIR-SPEED m.p.h.	TOP LINE: GRAVITY DROP IN INCHES PRESENT RANGE IN FEET														BOTTOM LINE: TIME OF FLIGHT IN SECONDS					
				200	400	600	800	1000	1200	1400	1600	1800	2000	2200	2400	2600	2800	3000	3200	3400	3600	3800	4000
0	1.0	0	0	1 0.07	4 0.15	10 0.23	18 0.31	29 0.40	43 0.48	61 0.57	82 0.65	105 0.77	133 0.88	163 1.00	200 1.12	245 1.24	295 1.35	350 1.48	413 1.62	480 1.75	552 1.91	644 2.07	742 2.23
		131	150	1 0.07	3 0.14	8 0.21	15 0.29	25 0.37	37 0.45	52 0.54	68 0.63	88 0.72	112 0.82	140 0.92	173 1.02	210 1.13	250 1.23	295 1.35	344 1.47	398 1.60	460 1.74	535 1.88	618 2.03
		261	300	1 0.07	3 0.13	7 0.20	13 0.27	21 0.34	32 0.42	45 0.50	60 0.58	77 0.64	98 0.75	122 0.84	149 0.94	181 1.04	215 1.15	252 1.26	295 1.37	342 1.48	396 1.60	457 1.73	523 1.86
		392	450	1 0.06	3 0.12	6 0.18	11 0.25	18 0.32	28 0.38	40 0.45	53 0.53	68 0.61	85 0.69	105 0.78	128 0.87	156 0.96	185 1.05	216 1.15	252 1.25	293 1.36	338 1.47	390 1.59	445 1.71
		523	600	1 0.06	3 0.11	5 0.16	9 0.23	16 0.30	25 0.36	36 0.42	48 0.50	61 0.57	75 0.65	91 0.73	112 0.81	134 0.90	160 0.98	188 1.08	219 1.17	253 1.26	292 1.36	338 1.47	386 1.58
7,000	0.8	0	0	1 0.07	4 0.15	10 0.23	18 0.30	29 0.39	42 0.46	58 0.55	77 0.62	99 0.74	124 0.84	151 0.95	185 1.07	223 1.18	264 1.29	311 1.40	362 1.53	422 1.62	490 1.76	562 1.90	637 2.04
		131	150	1 0.07	3 0.14	8 0.21	15 0.28	25 0.36	36 0.43	50 0.52	66 0.60	84 0.69	104 0.78	128 0.87	158 0.97	191 1.07	228 1.17	270 1.27	315 1.38	364 1.49	417 1.60	477 1.72	540 1.85
		261	300	1 0.07	3 0.13	7 0.20	12 0.27	21 0.34	31 0.41	43 0.48	56 0.56	72 0.64	91 0.72	112 0.80	137 0.89	165 0.98	197 1.08	232 1.17	268 1.27	308 1.38	353 1.48	405 1.59	459 1.70
		392	450	1 0.06	3 0.12	6 0.18	11 0.24	18 0.31	27 0.38	38 0.44	49 0.52	65 0.59	80 0.65	98 0.75	119 0.83	143 0.91	169 0.99	195 1.08	231 1.17	265 1.26	302 1.36	344 1.46	391 1.56
		523	600	1 0.06	3 0.11	5 0.16	9 0.22	15 0.29	23 0.35	33 0.42	44 0.49	56 0.56	70 0.63	84 0.71	102 0.78	122 0.86	145 0.93	171 1.01	198 1.09	228 1.17	262 1.26	300 1.35	339 1.45
16,000	0.6	131	150	1 0.07	4 0.14	8 0.21	15 0.28	23 0.35	34 0.43	46 0.51	62 0.59	80 0.67	102 0.75	124 0.83	150 0.92	178 1.01	210 1.10	246 1.19	285 1.28	326 1.38	371 1.46	422 1.58	476 1.68
		261	300	1 0.06	3 0.13	7 0.19	12 0.26	20 0.33	29 0.40	41 0.47	54 0.55	69 0.62	86 0.70	106 0.77	128 0.85	153 0.93	179 1.01	210 1.10	244 1.19	281 1.28	320 1.38	362 1.46	408 1.56
		392	450	1 0.06	3 0.12	6 0.18	11 0.24	17 0.30	25 0.37	35 0.44	48 0.51	62 0.58	77 0.64	93 0.72	111 0.79	132 0.87	156 0.94	184 1.02	212 1.10	244 1.19	277 1.27	314 1.36	354 1.44
		523	600	1 0.06	2 0.11	5 0.16	9 0.21	15 0.28	22 0.34	31 0.40	41 0.47	52 0.53	64 0.60	78 0.66	94 0.73	113 0.81	135 0.88	160 0.95	182 1.03	210 1.10	238 1.18	268 1.26	303 1.35
28,000	0.4	131	150	1 0.07	4 0.14	8 0.21	14 0.28	23 0.35	32 0.42	45 0.50	59 0.57	77 0.65	96 0.73	118 0.80	142 0.88	168 0.96	195 1.04	227 1.12	263 1.20	300 1.29	341 1.38	384 1.45	428 1.56
		261	300	1 0.06	3 0.13	7 0.19	13 0.26	20 0.32	28 0.39	40 0.46	53 0.53	67 0.60	84 0.66	101 0.76	121 0.82	142 0.89	167 0.97	196 1.04	225 1.12	258 1.20	292 1.28	330 1.36	368 1.44
		392	450	1 0.06	2 0.12	6 0.18	11 0.24	17 0.30	24 0.36	34 0.43	48 0.50	49 0.56	72 0.63	78 0.70	104 0.77	124 0.83	145 0.90	169 0.97	196 1.05	224 1.12	253 1.20	286 1.27	316 1.35
		523	600	1 0.05	3 0.10	5 0.15	8 0.20	12 0.27	21 0.34	30 0.40	40 0.46	51 0.53	62 0.59	75 0.66	89 0.72	106 0.79	125 0.84	145 0.91	168 0.98	192 1.04	218 1.10	247 1.18	278 1.24
44,000	0.2	131	150	1 0.07	4 0.13	8 0.20	14 0.27	22 0.34	31 0.41	44 0.48	57 0.56	74 0.63	92 0.70	112 0.77	133 0.84	157 0.91	184 0.99	212 1.06	242 1.14	274 1.21	308 1.28	346 1.37	385 1.45
		261	300	1 0.06	3 0.13	7 0.19	12 0.25	19 0.31	27 0.38	38 0.44	50 0.51	64 0.58	79 0.64	96 0.71	115 0.79	135 0.85	158 0.92	182 0.99	210 1.07	238 1.14	268 1.20	299 1.27	333 1.35
		392	450	1 0.06	2 0.12	5 0.18	10 0.23	17 0.30	23 0.36	32 0.41	44 0.48	56 0.54	70 0.60	85 0.66	101 0.73	119 0.80	138 0.85	160 0.92	182 0.98	206 1.05	234 1.11	260 1.19	290 1.25
		523	600	1 0.05	2 0.10	5 0.15	8 0.19	11 0.26	20 0.33	28 0.39	37 0.45	47 0.50	58 0.57	72 0.63	87 0.69	102 0.74	120 0.80	138 0.85	158 0.91	181 0.97	205 1.03	231 1.09	258 1.15

Data plotted and interpolated from: Aberdeen Proving Ground
Ballistics Research Laboratory Report No. 503, Dated 24 November 1944

Horizontal forward fire
muzzle velocity — 2,750 ft./sec.

20-mm HEI ammunition
with fuze, PD, M75

Gravity Drop and Time of Flight for 20-mm Ammunition, HEI, with Fuze, PD M75

Digitized by Google

appendix II

BOMB
BALLISTIC
DATA

This information has been compiled from US Navy ballistic charts.

HOW TO USE BOMB BALLISTIC TABLES

For the purpose of these tables, bombs are divided into three classes (A, B, and C) dependent on ballistic coefficient. Specific types of bombs are listed beneath their respective classes in the next section. Separate angles of depression, *measured from flight path*, are given for each class.

It will be noted that the graphs for horizontal flight are tabulated against altitude, while the graphs for the various dives are tabulated against slant range.

An attempt has been made to limit the tables to speeds and release altitudes of service interest.

To obtain the proper sight angle for a particular type of pass, the following calculations must be made by the pilot.

Determine what the angle of attack is in straight and level flight for a particular airspeed at which you expect to release the bomb. This information is supplied by the aircraft manufacturer. This angle of attack will vary as the cosine of the dive angle.

Determine the zero prediction line of sight, using the calculations suggested in appendix VI for the method of harmonization appropriate to the particular type of aircraft. This line of sight will remain constant in respect to the fuselage reference line.

Example

Suppose sight angle, altitude and arming allowances are desired for dropping a 3-pound practice bomb under the following conditions:

F-86 aircraft with Nellis harmonization

Dive angle	45°
Slant range	1,400 yards
Calibrated airspeed	360 knots

Solution

By reference to the list of bomb classes, the 3-pound bomb is found to be in class C. From the bomb ballistic table the following information can be determined.

		Mils
Depression required for	40° dive	119
Depression required for	50° dive	96
By interpolation,	45° dive	107.5

Since the conditions specify an F-86 aircraft and it is a well known fact that zero prediction sight line is not parallel to flight path in this case, several other calculations must be made in order to arrive at the final amount of depression which will be set into the sight.

a. Determine the angle of attack for straight and level flight at 360 knots. This information is supplied by the aircraft manufacturer. In this particular problem, fuselage reference line is at an angle of 20 mils above flight path.

b. This angle of attack will vary as the cosine of the dive angle in this case:

20 mils×0.7 (cosine of 45°)........14 mils.

c. With the Nellis method of harmonization the zero prediction sight line is 4.3 mils below fuselage reference line as shown in the diagram on the following page.

The desired sight angle can then be calculated as follows.

From bomb graphs	107.5
Angle of attack at 45° dive	+14
TOTAL	121.5

Digitized by Google

Angle between fuselage reference line and zero prediction sight line....... −4.3

Desired depressed sight line.........117.2
Mils below zero prediction sight line

Cross-Wind and Target-Motion Correction

A rule of thumb which can be used for correction for cross wind and target motion is shown below.

300-knot release	400-knot release	500-knot release
3 mils per knot	2.5 mils per knot	2 mils per knot

BOMB CLASSIFICATION

The three classes into which bombs are divided for this appendix are outlined below.

Class A Bombs

Ballistic coefficient greater than 1.8
(Ballistic coefficient assumed to be 3.33)

All AP bombs.

All GP bombs.

500-lb. and 1000-lb. SAP bombs.

220-lb. and 260-lb. fragmentation bombs.

100-lb. practice bombs, M38A2.

500-lb. practice bombs, wet sand filled.

1000-lb. practice bombs, water or wet sand filled.

25-lb. practice bombs, Mk 76.

Class B Bombs

Ballistic coefficient between 1.8 and 1.0.
(Ballistic coefficient assumed to be 1.25)

100-lb. and 250-lb. GP bombs.

Round nose depth bombs.

100-lb. chemical bombs.

500-lb. practice bombs, water-filled.

100-lb. practice bombs, -M15 Mod 2, wet sand filled.

4.75 practice bombs, AN-Mk 43.

Class C Bombs

Ballistic coefficient between 1.0 and 0.6.
(Ballistic coefficient assumed to be 0.77)

100-lb. incendiary bombs.

100-lb. practice bombs, water-filled.

Flat nose depth bombs.

3-lb. practice bombs.

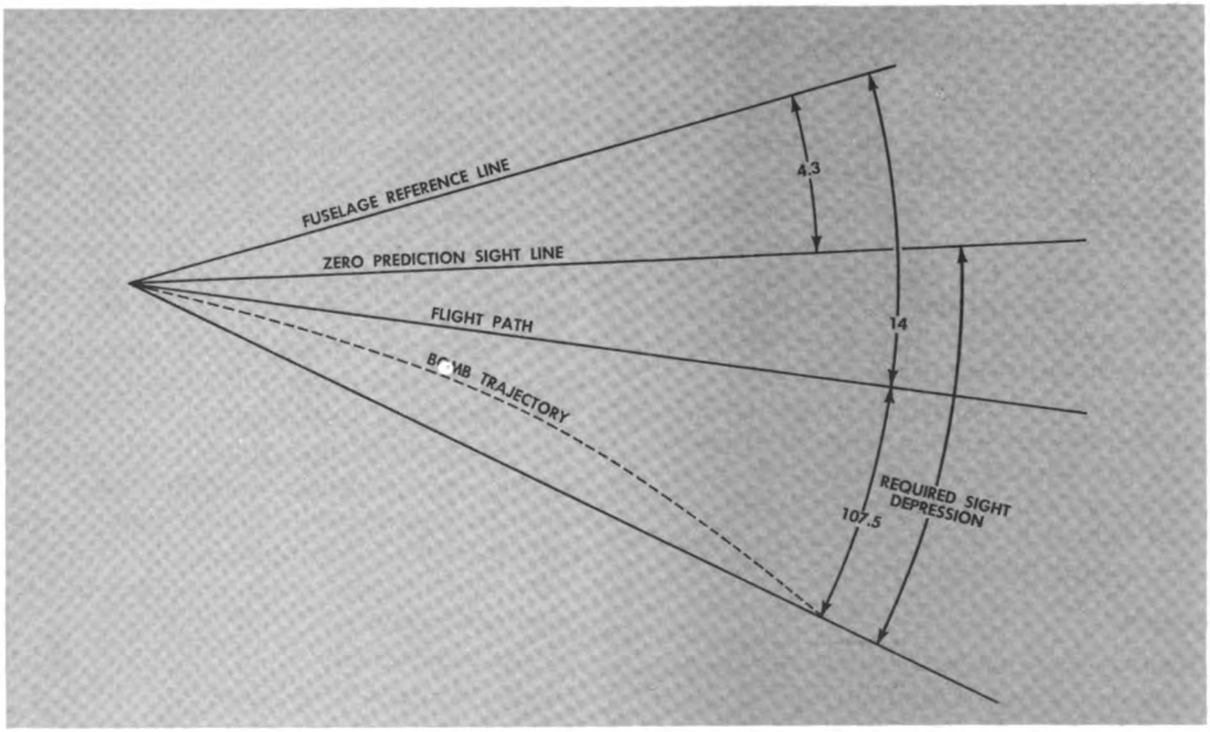

Calculation of Sight Angle

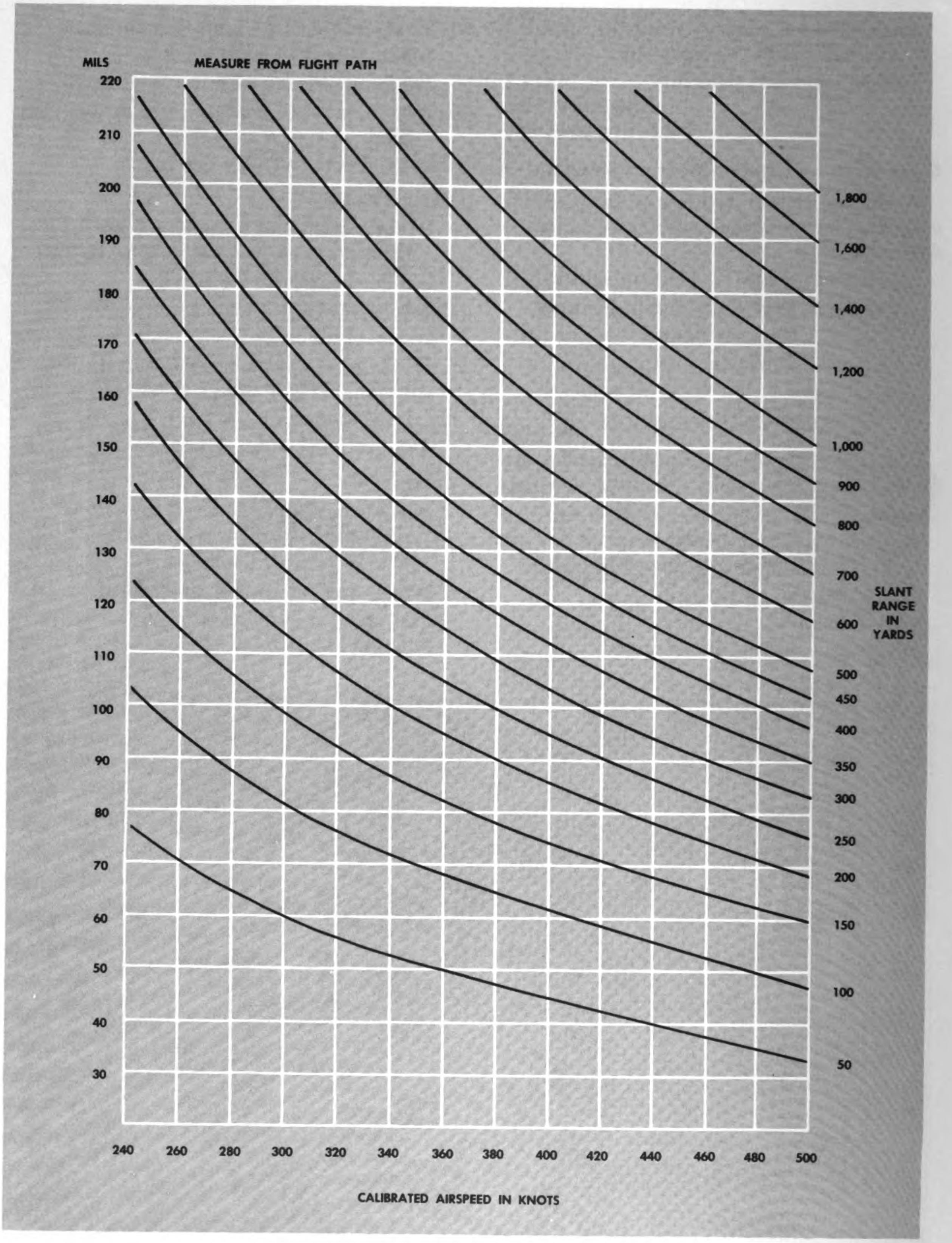

Class A Bombs: Horizontal Flight

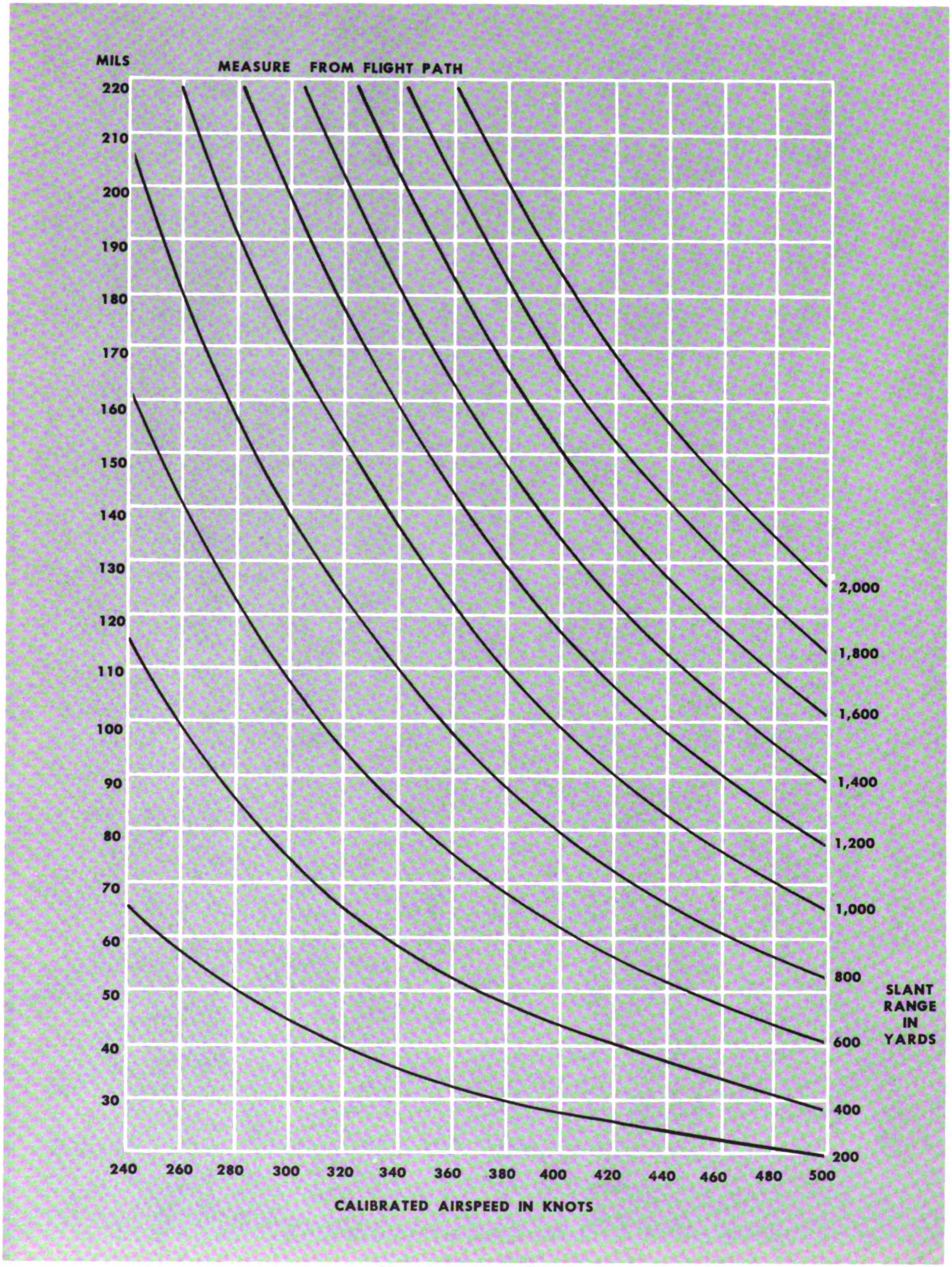

Class A Bombs: 10° Dive

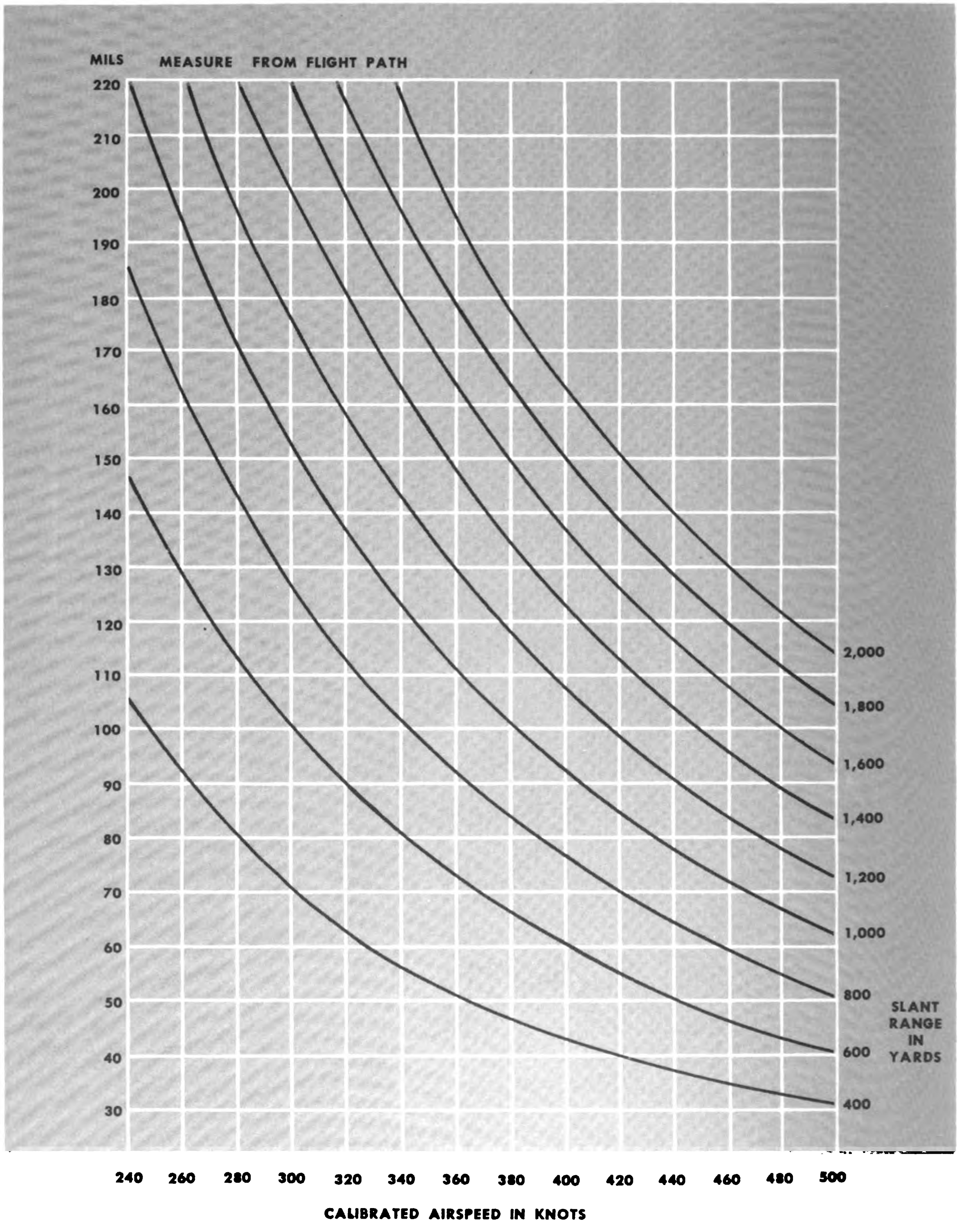

Class A Bombs: 20° Dive

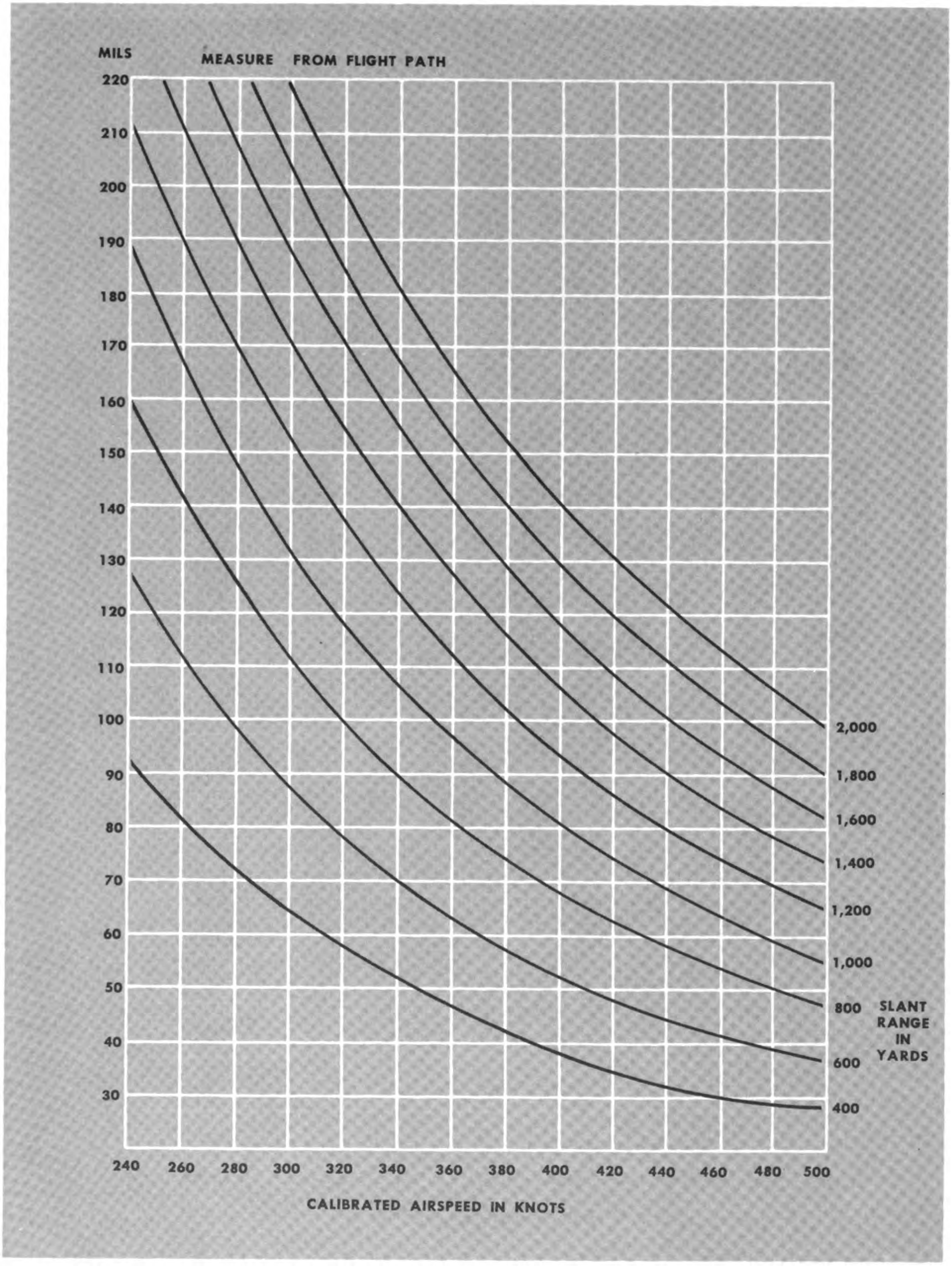

Class A Bombs: 30° Dive

Digitized by Google

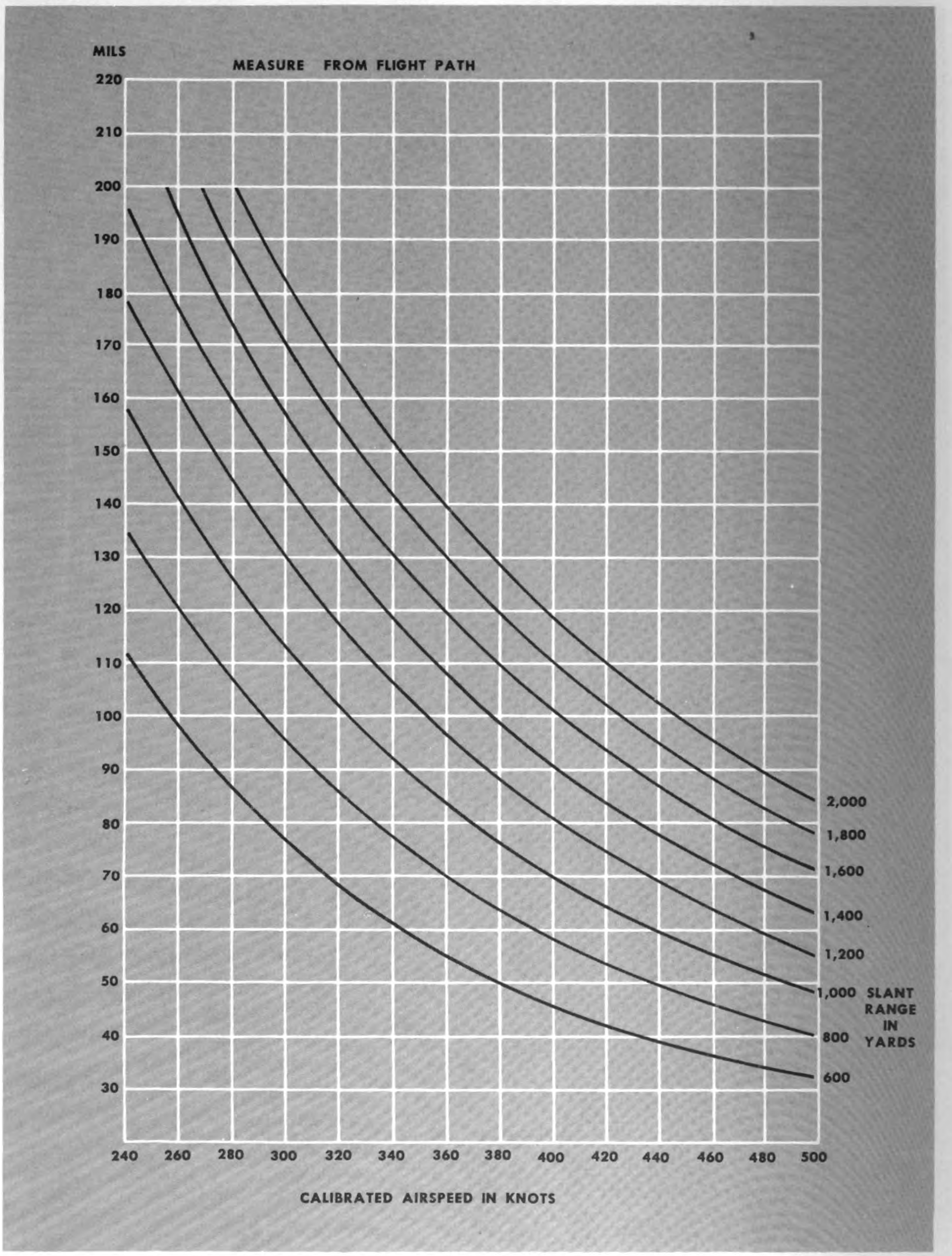

Class A Bombs: 40° Dive

Digitized by Google

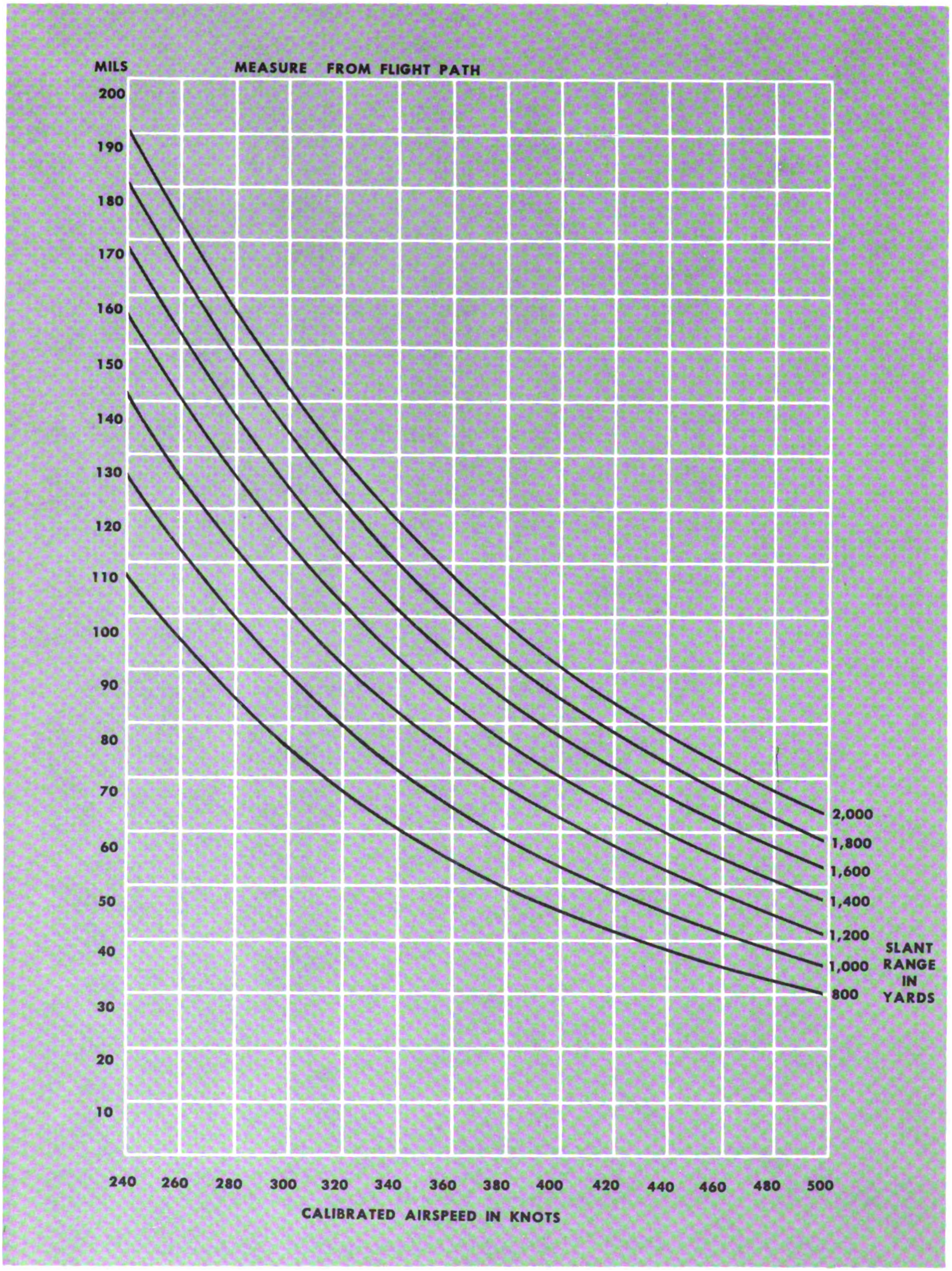

Class A Bombs: 50° Dive

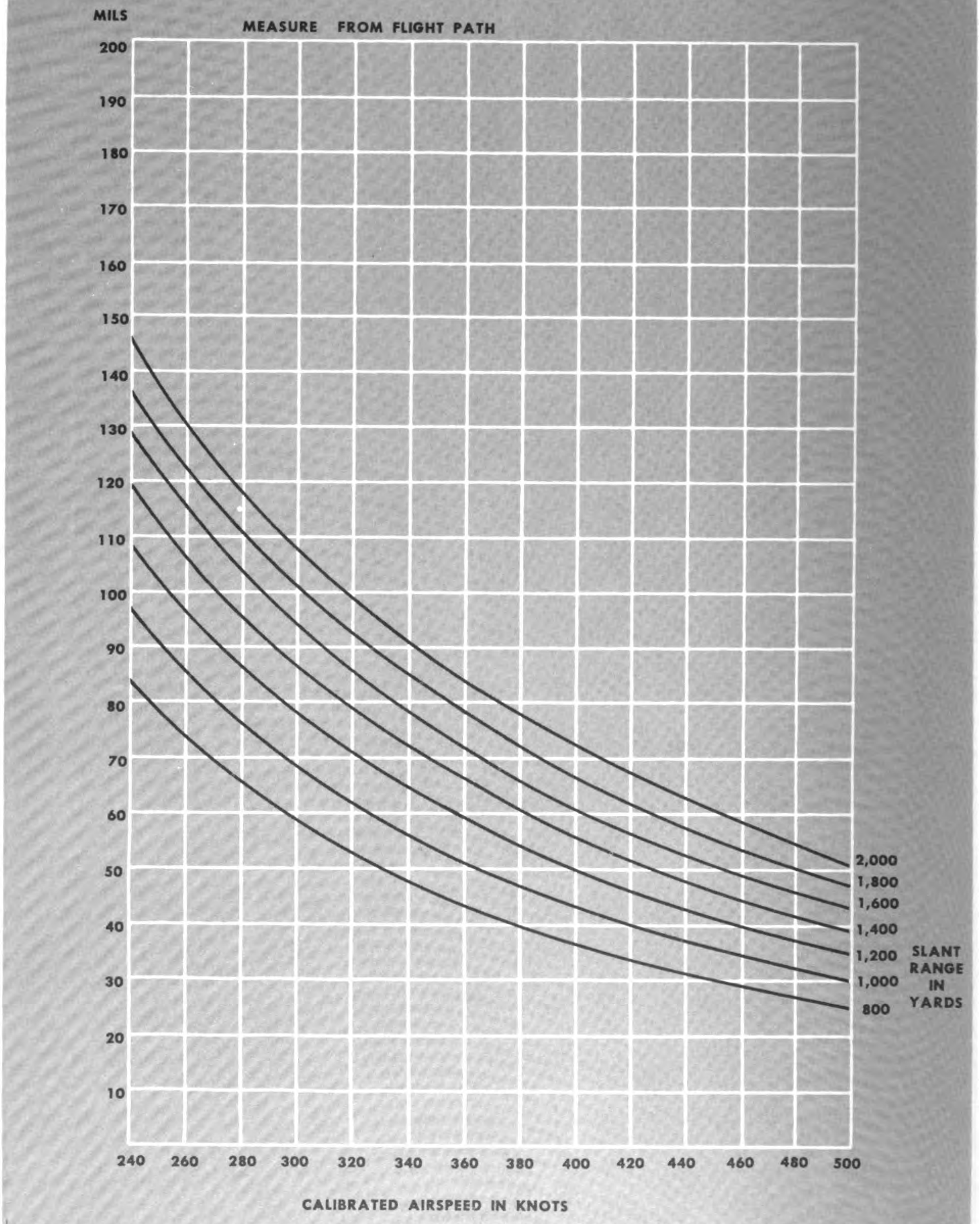

Class A Bombs: 60° Dive

Digitized by Google

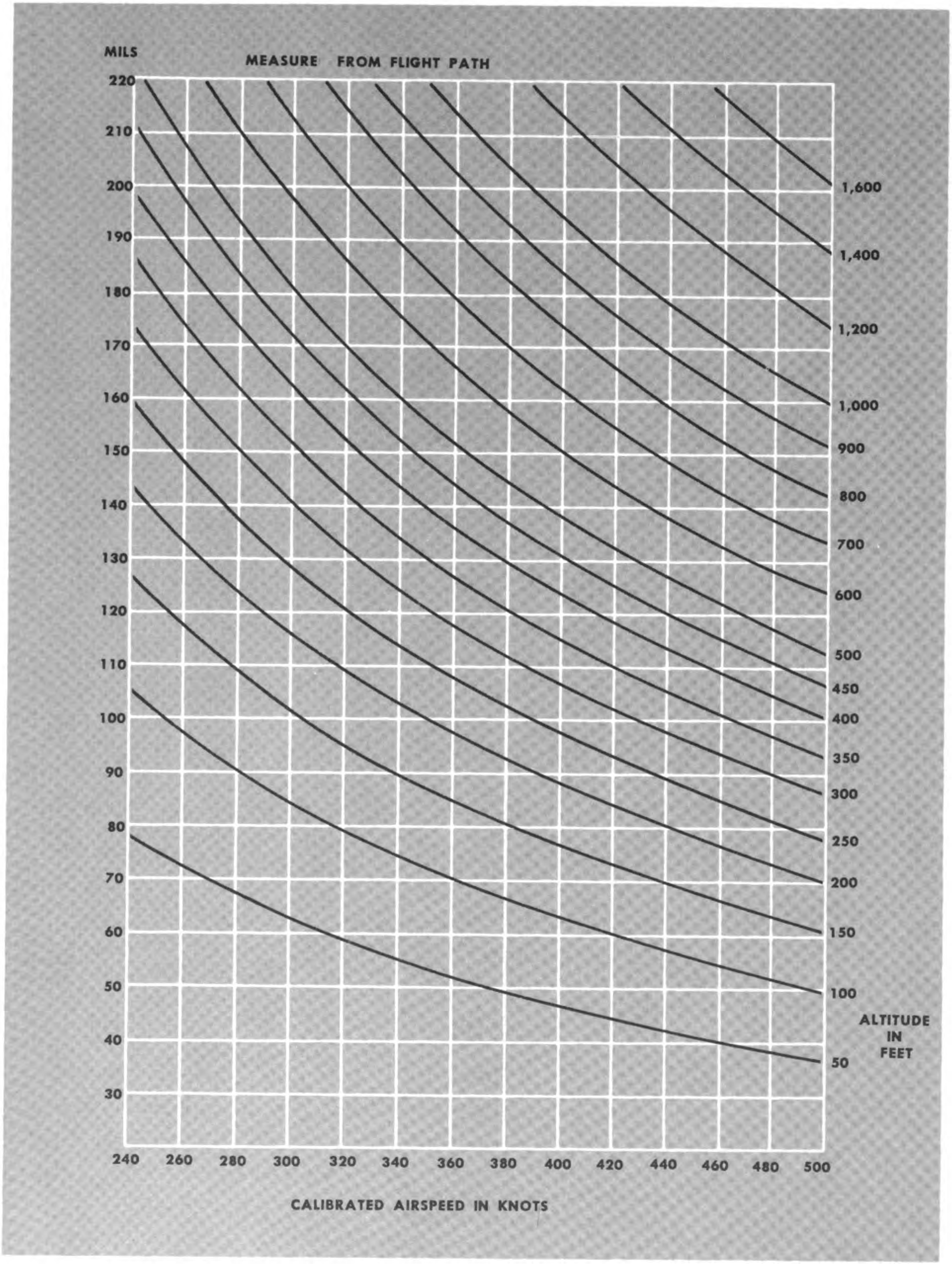

Class B Bombs: Horizontal Flight

Digitized by Google

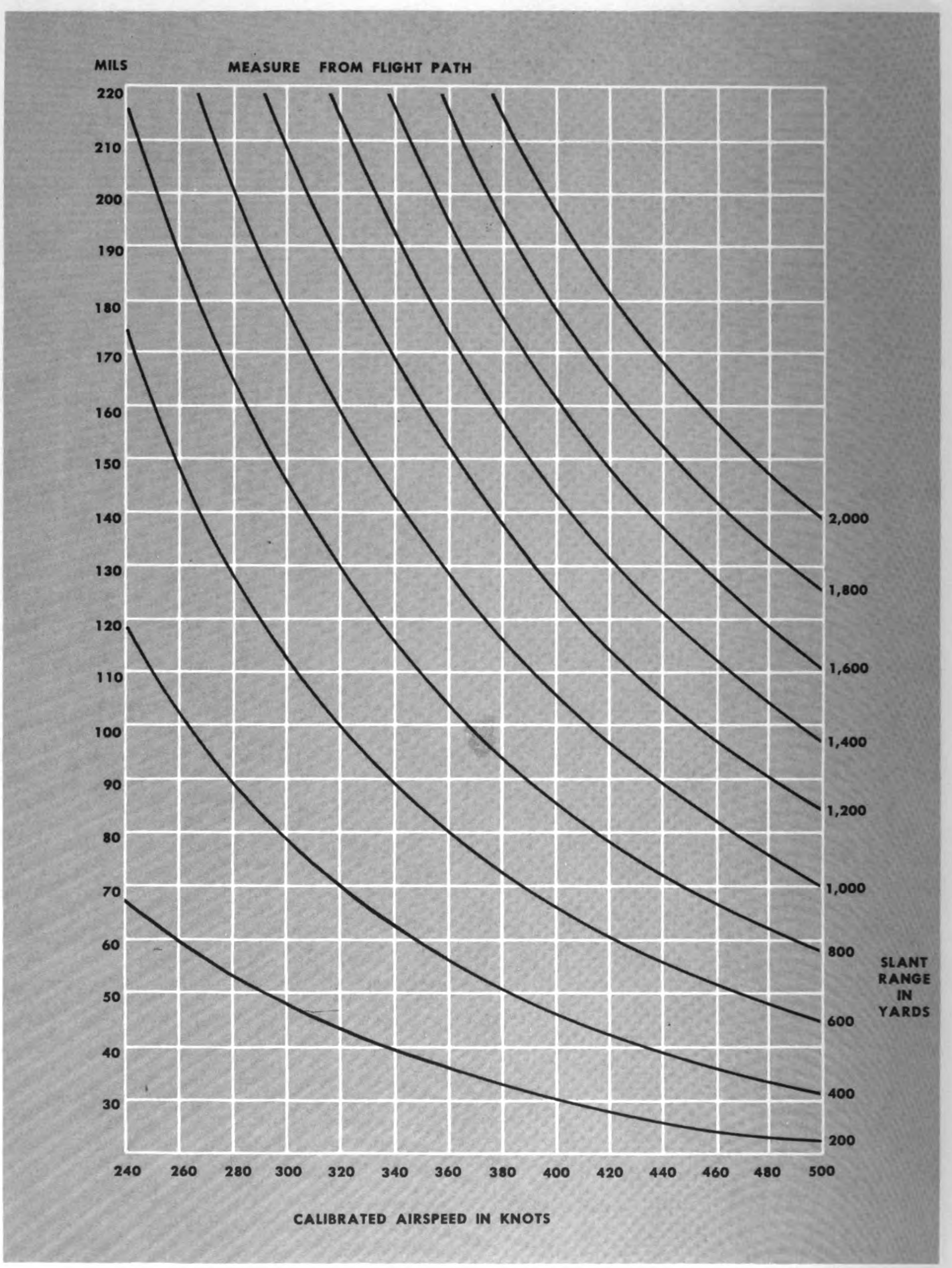

Class B Bombs: 10° Dive

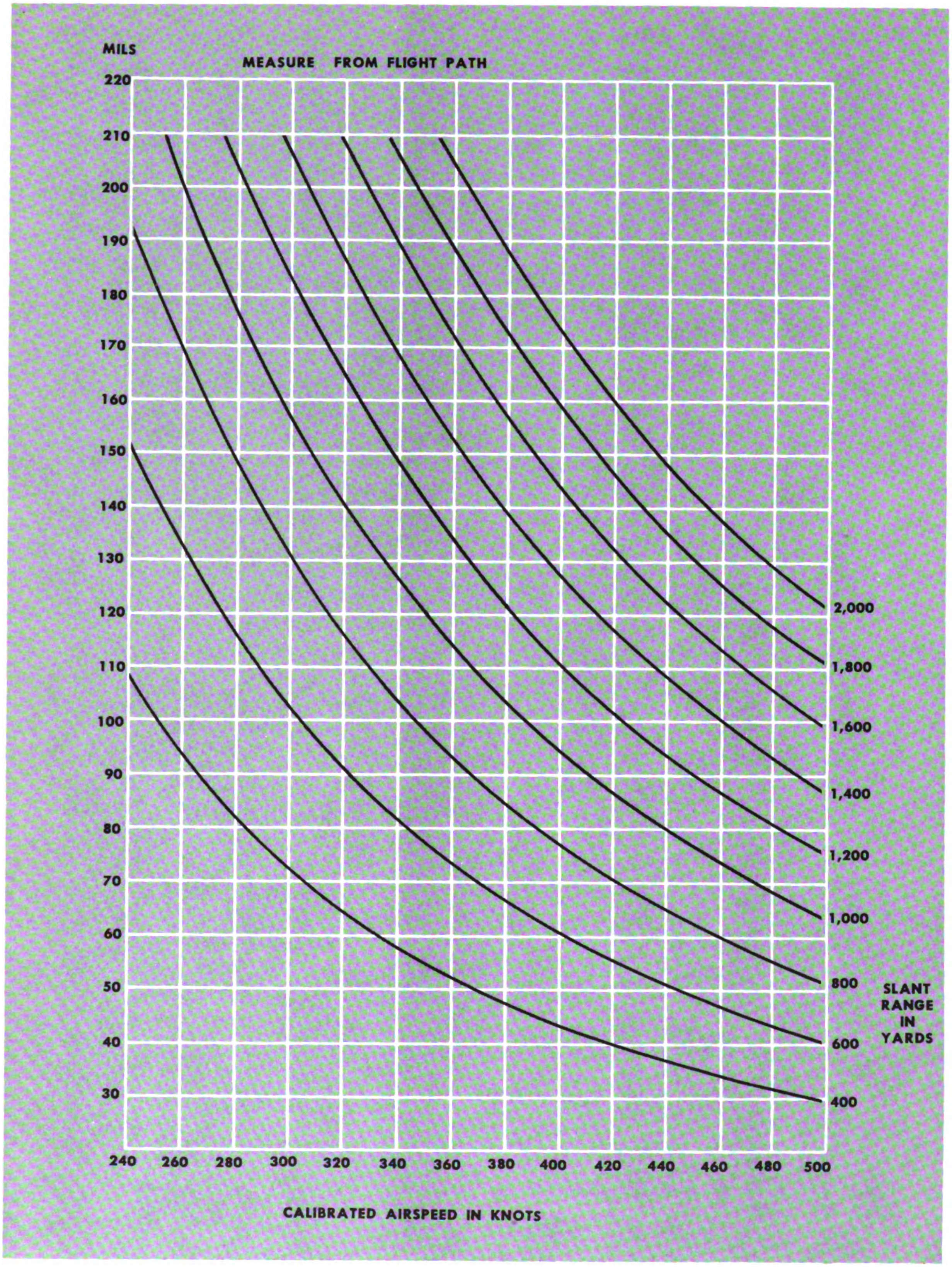

Class B Bombs: 20° Dive

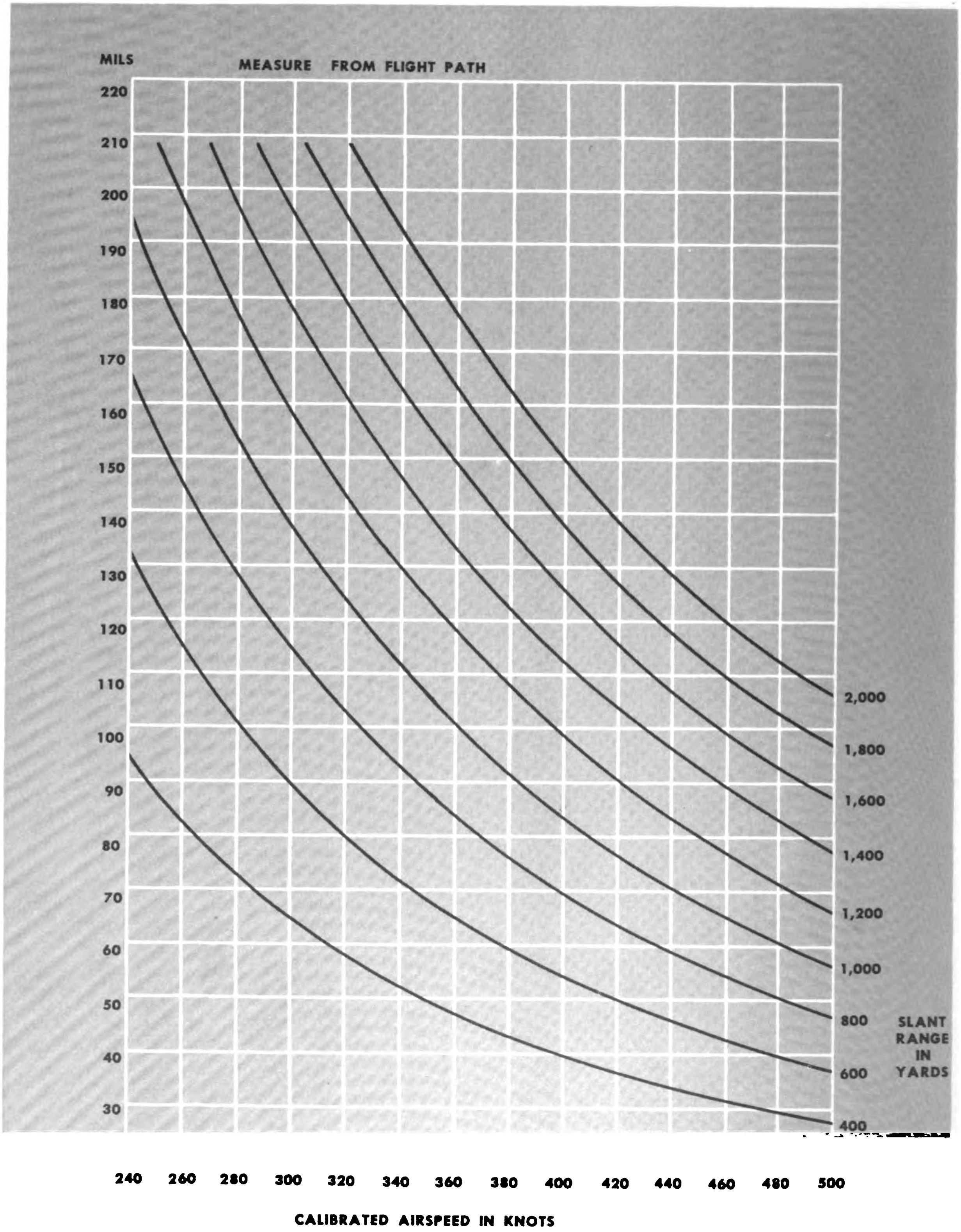

Class B Bombs: 30° Dive

Digitized by Google

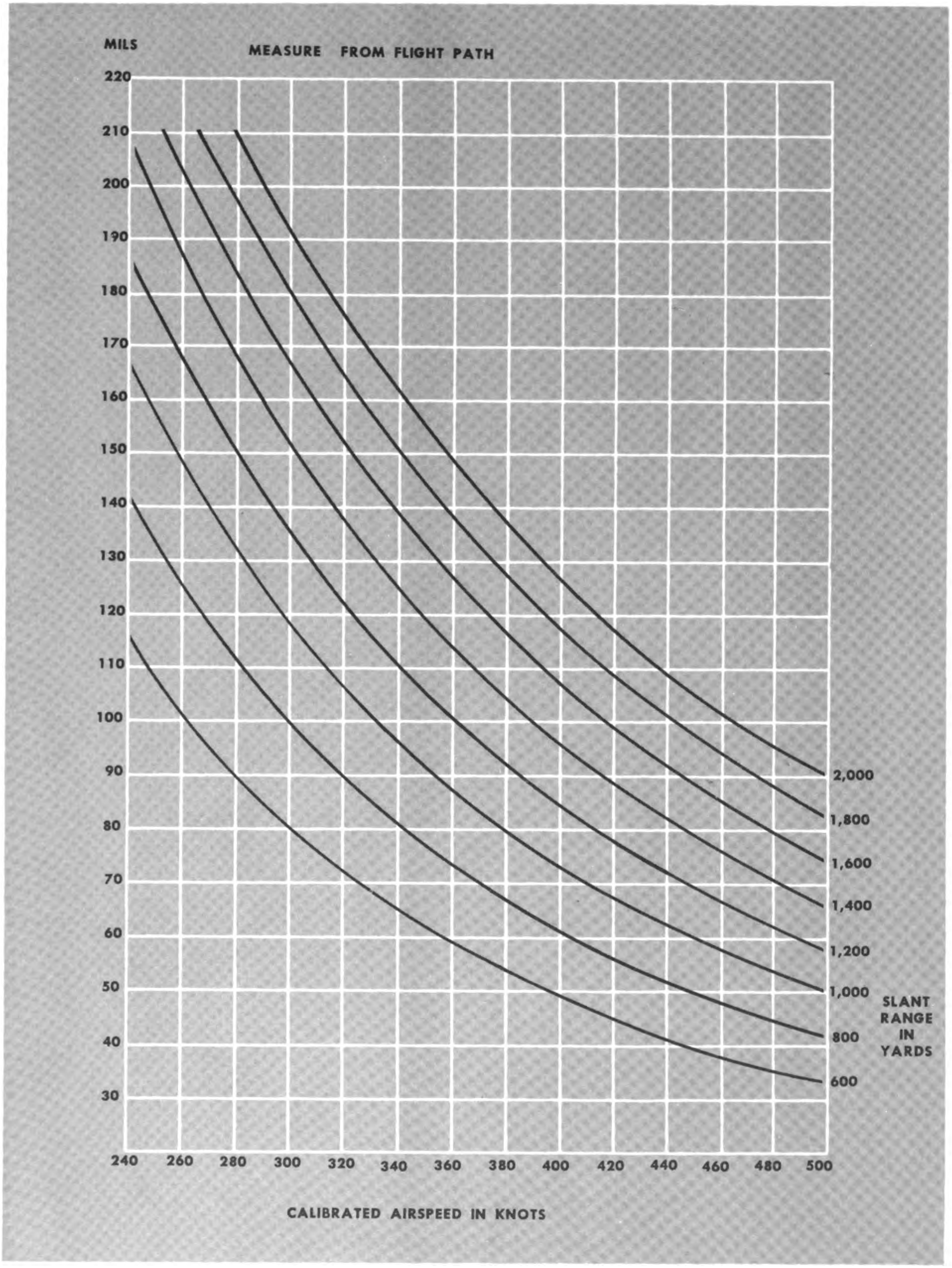

Class B Bombs: 40° Dive

Digitized by Google

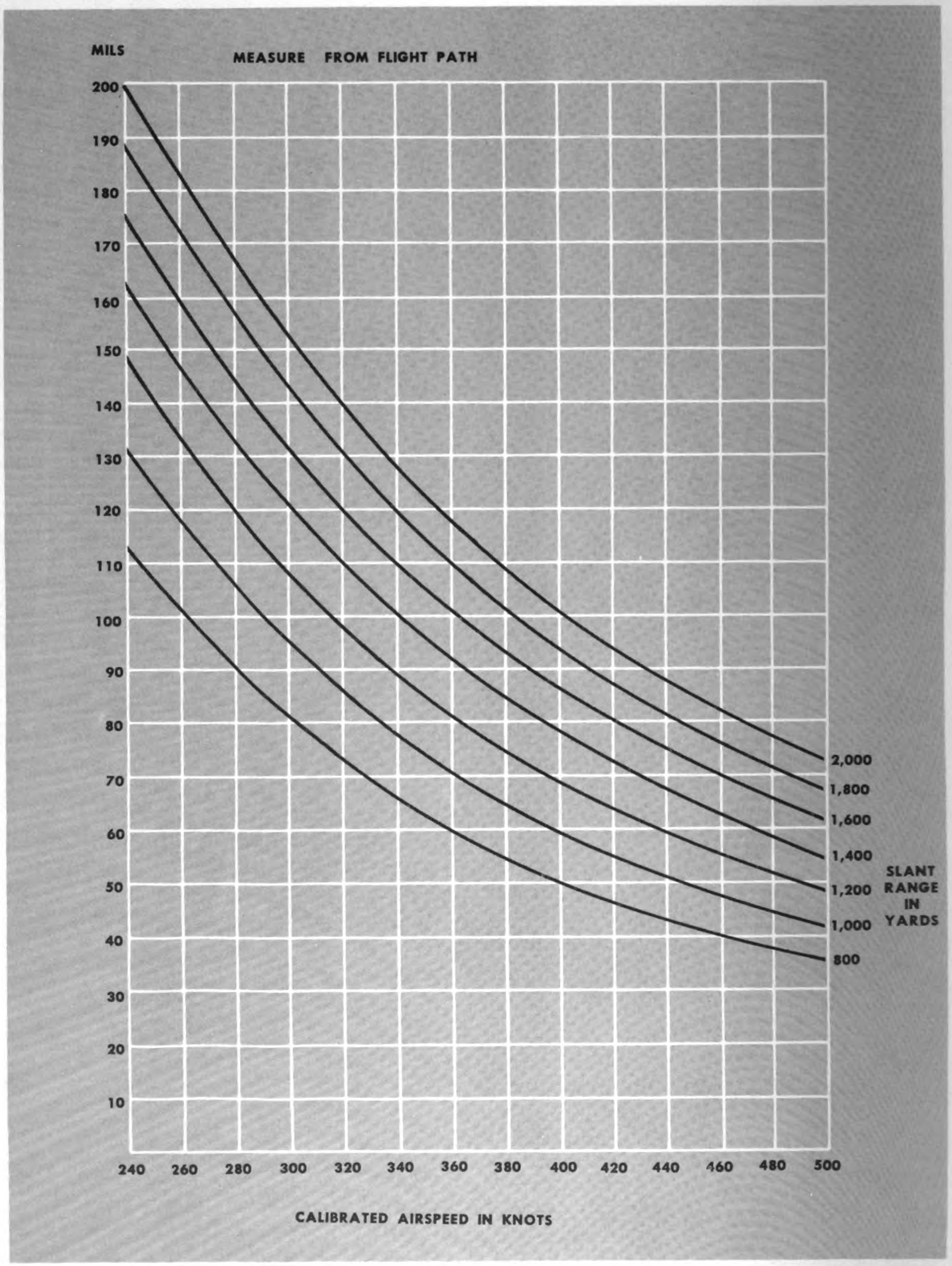

Class B Bombs: 50° Dive

Digitized by Google

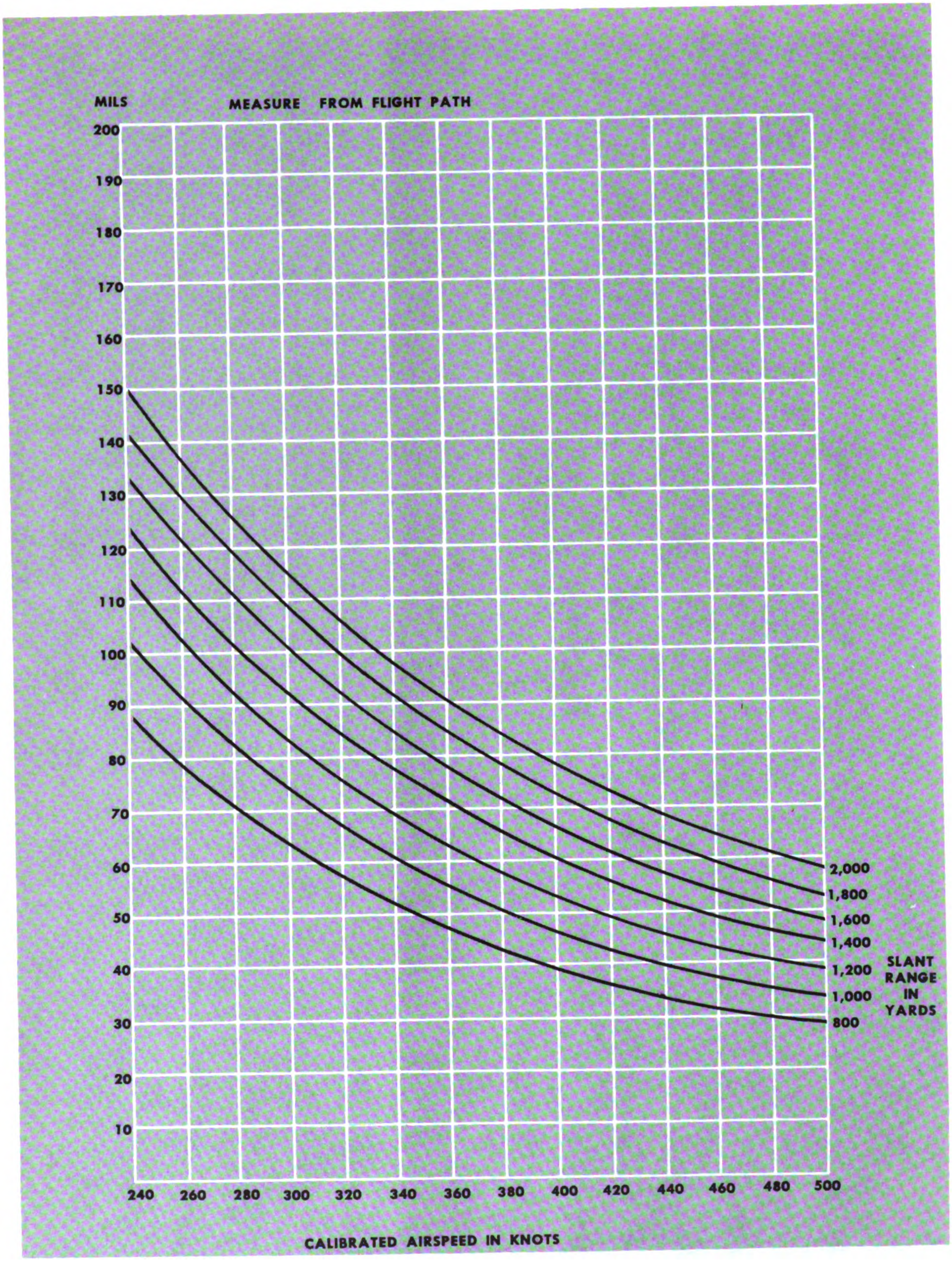

Class B Bombs: 60° Dive

Digitized by Google

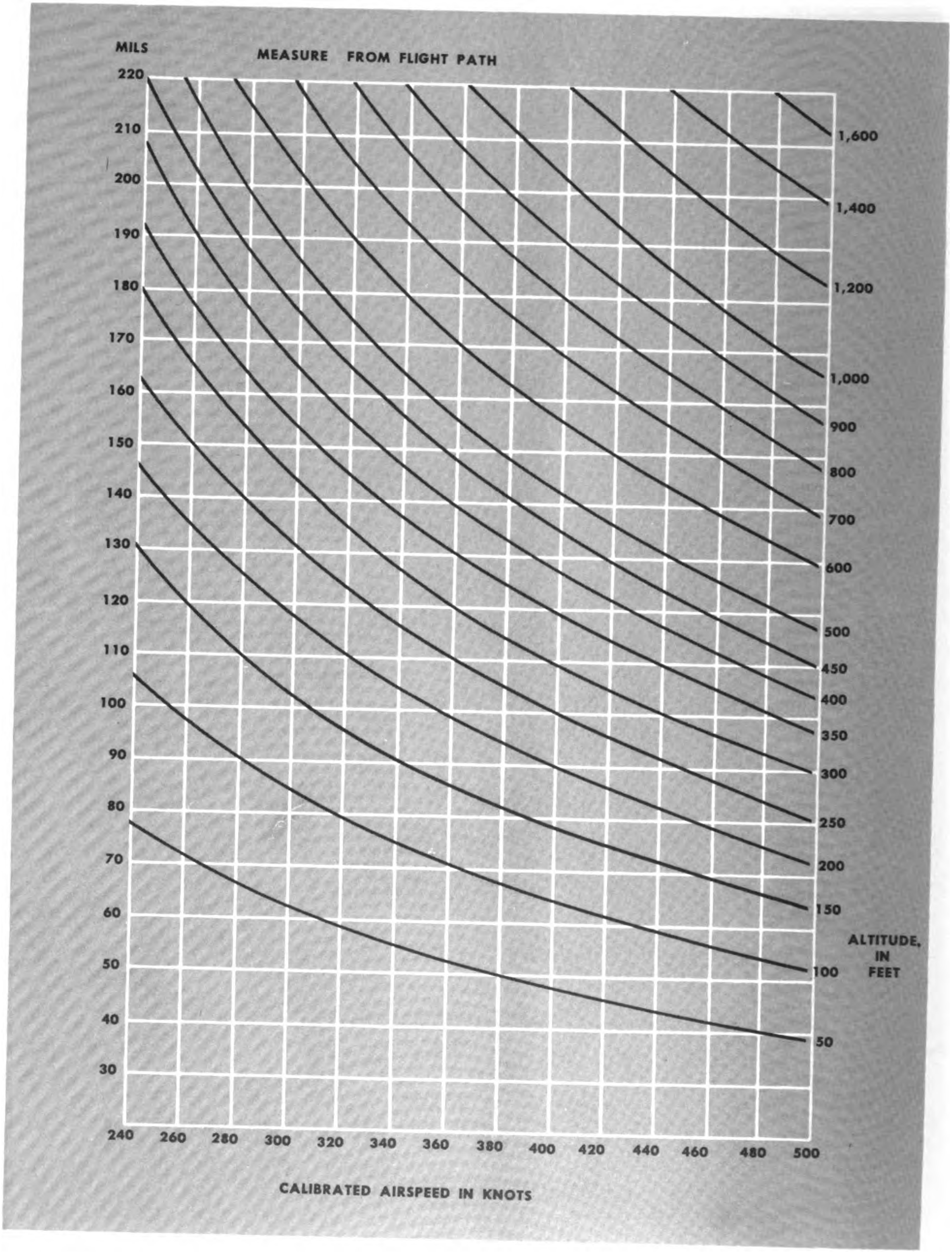

Class C Bombs: Horizontal Flight

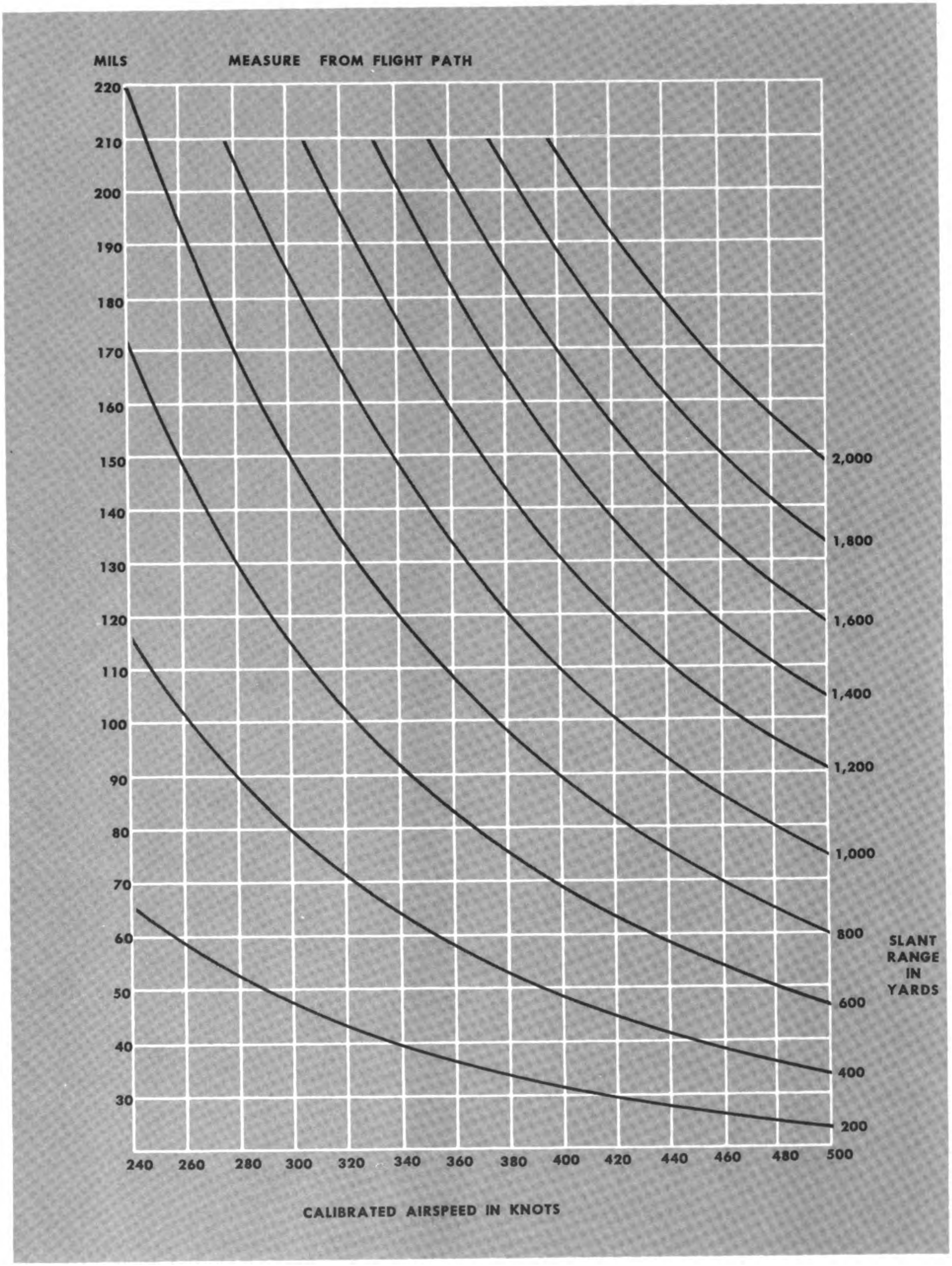

Class C Bombs: 10° Dive

Digitized by Google

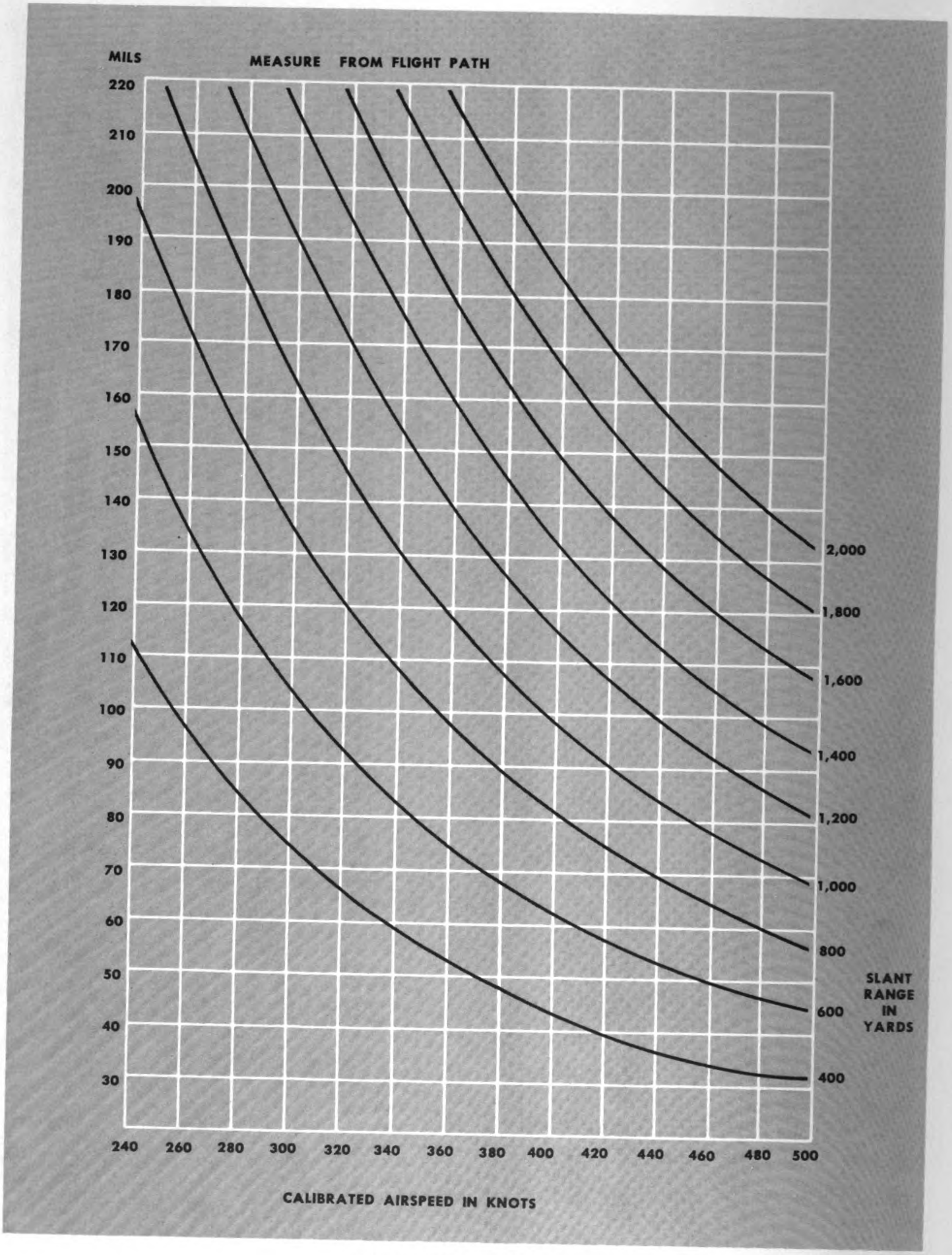

Class C Bombs: 20° Dive

Digitized by Google

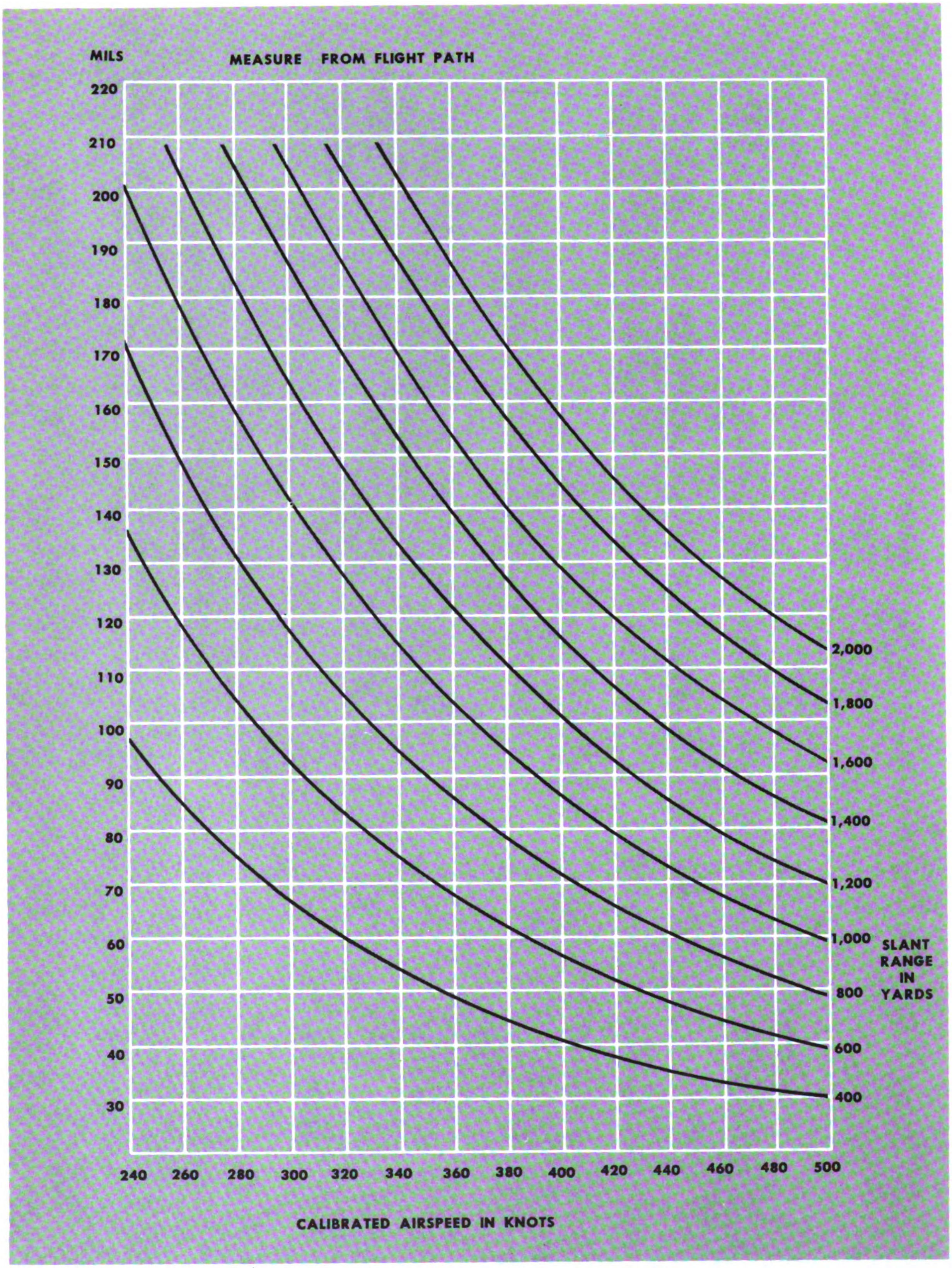

Class C Bombs: 30° Dive

Digitized by Google

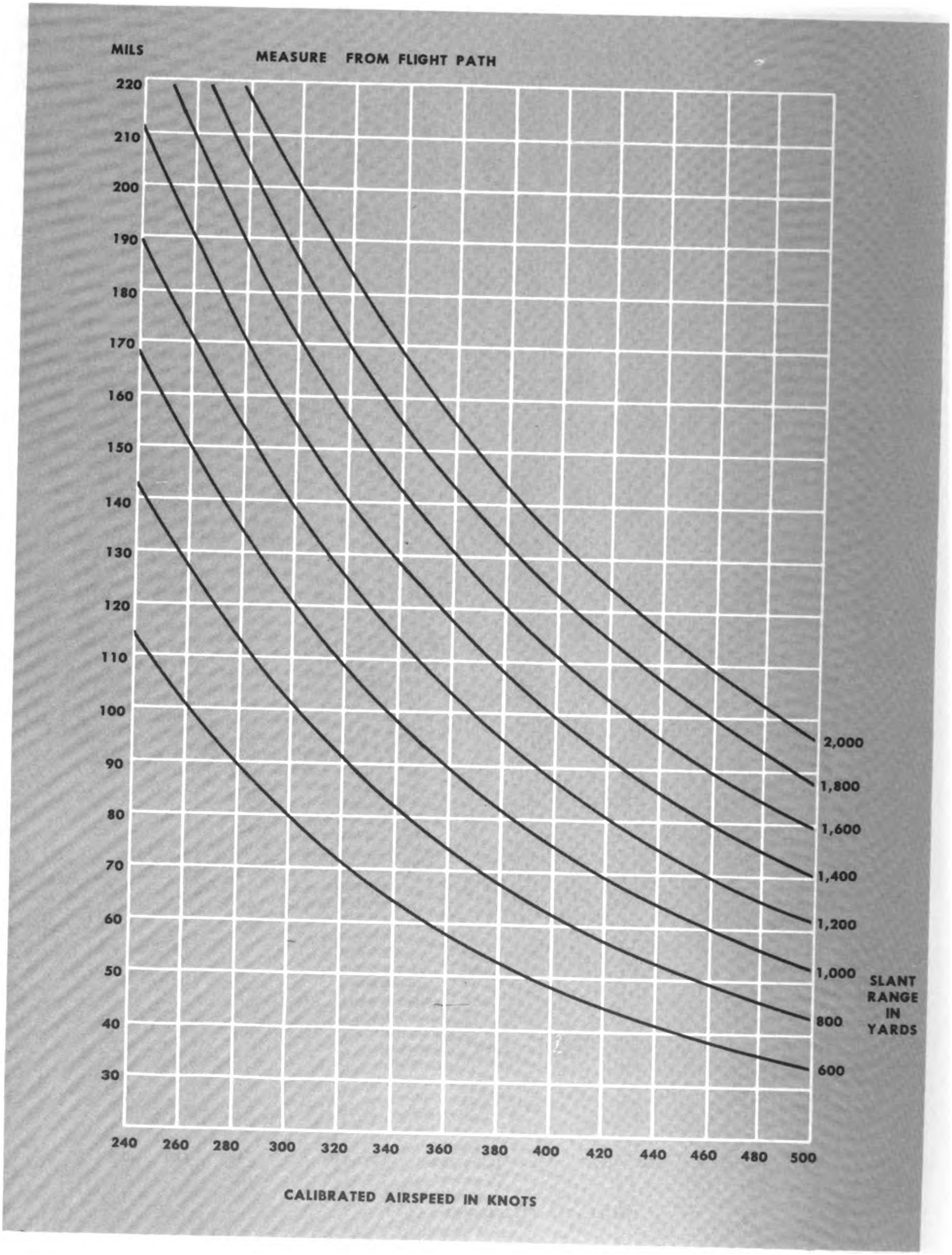

Class C Bombs: 40° Dive

Digitized by Google

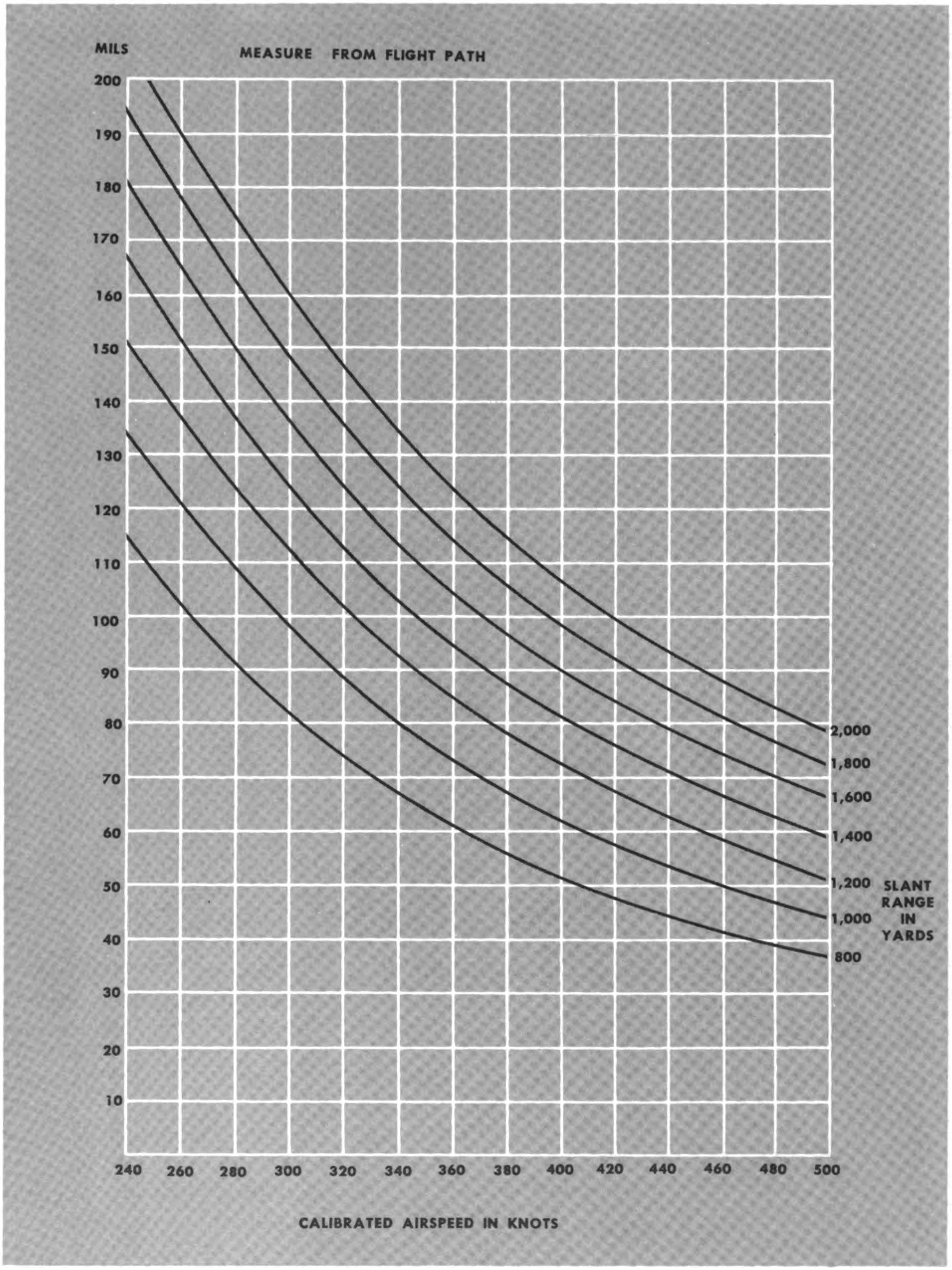

Class C Bombs: 50° Dive

Digitized by Google

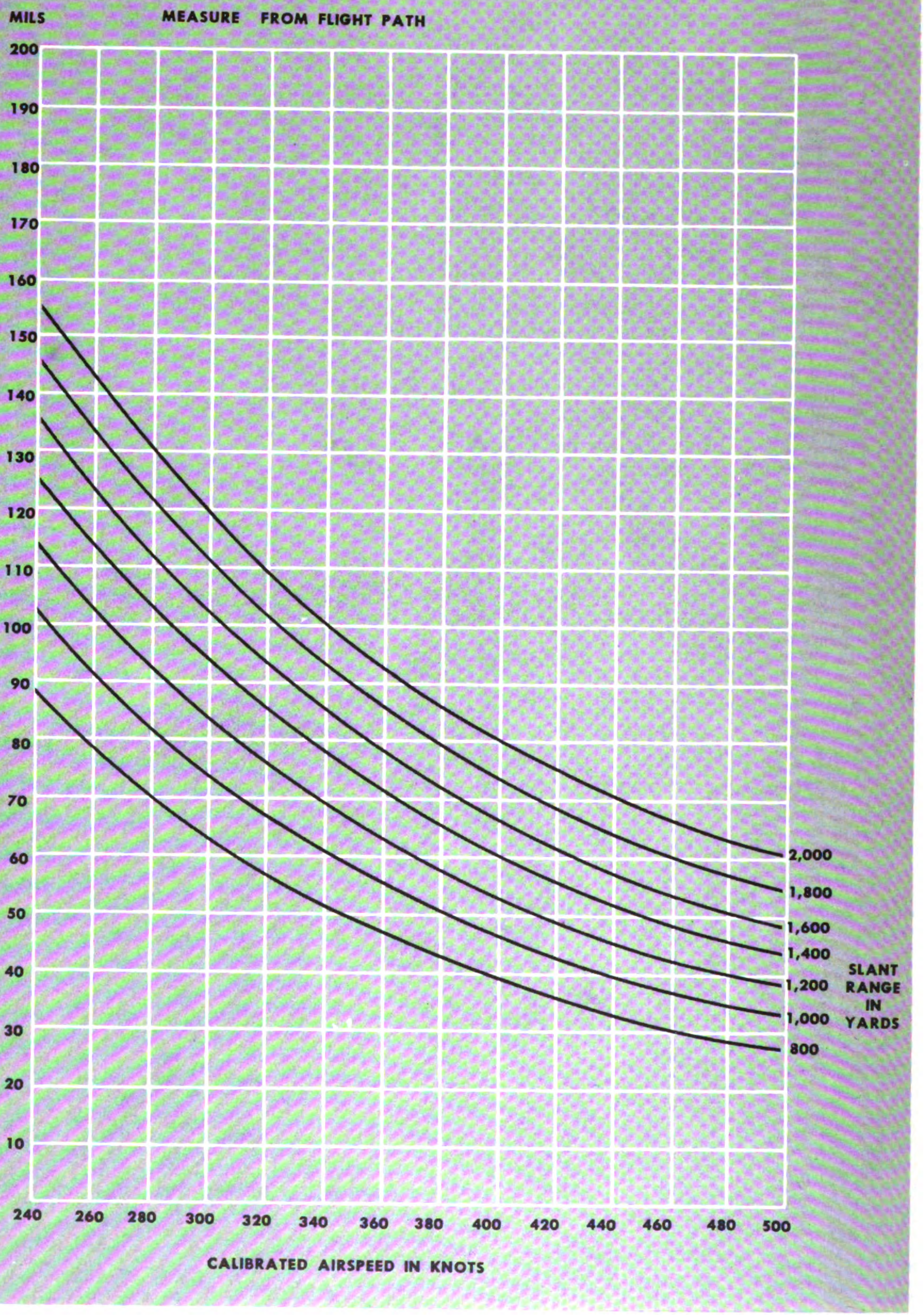

Class C Bombs: 60° Dive

Digitized by Google

appendix III

ROCKET BALLISTIC DATA

Information is given in this appendix concerning accurate firing of 2.25-inch and 2.75-inch rockets. The information on the 2.25-inch rocket begins on this page. Information on the 2.75-inch rocket may be found on page 297.

NOTE: A recent project conducted by the Training Research and Development Section of the USAF Fighter Weapons School, Nellis Air Force Base, Nevada, has indicated that rocket ballistic data should be arrived at empirically to determine the desired depression for each type of aircraft and fire-control system.

2.25-INCH AIRCRAFT ROCKET

The following passage explains the use of the data given in the ballistic tables for the 2.25-inch aircraft (practice) rocket (AR). Certain corrections and allowances for factors affecting the trajectory of the rocket, as well as for wind and target motion, and for gravity drop, are necessary when K-series sights are used for air-to-ground attack with this rocket.

Sights of the K-14 series can be used for air-to-ground rocketry provided an angular correction, called the *rocket-fire depression angle,* is applied to the fixed sight line for gunfire. The depression angle for a particular set of attack conditions must take into account a number of factors that affect the trajectory of the rocket. These include the gravity drop of the rocket, the speed and dive angle of the attacking aircraft, the orientation and type of the rocket launcher, and the vertical distance between the sight head and the launcher.

A method for calculating the rocket depression angle that can be applied to any set of conditions is given in the following pages. In this method a number of quantities peculiar to rocketfire are used. These quantities are illustrated below. Note in this figure that an angle is measured positively in the *counter-*

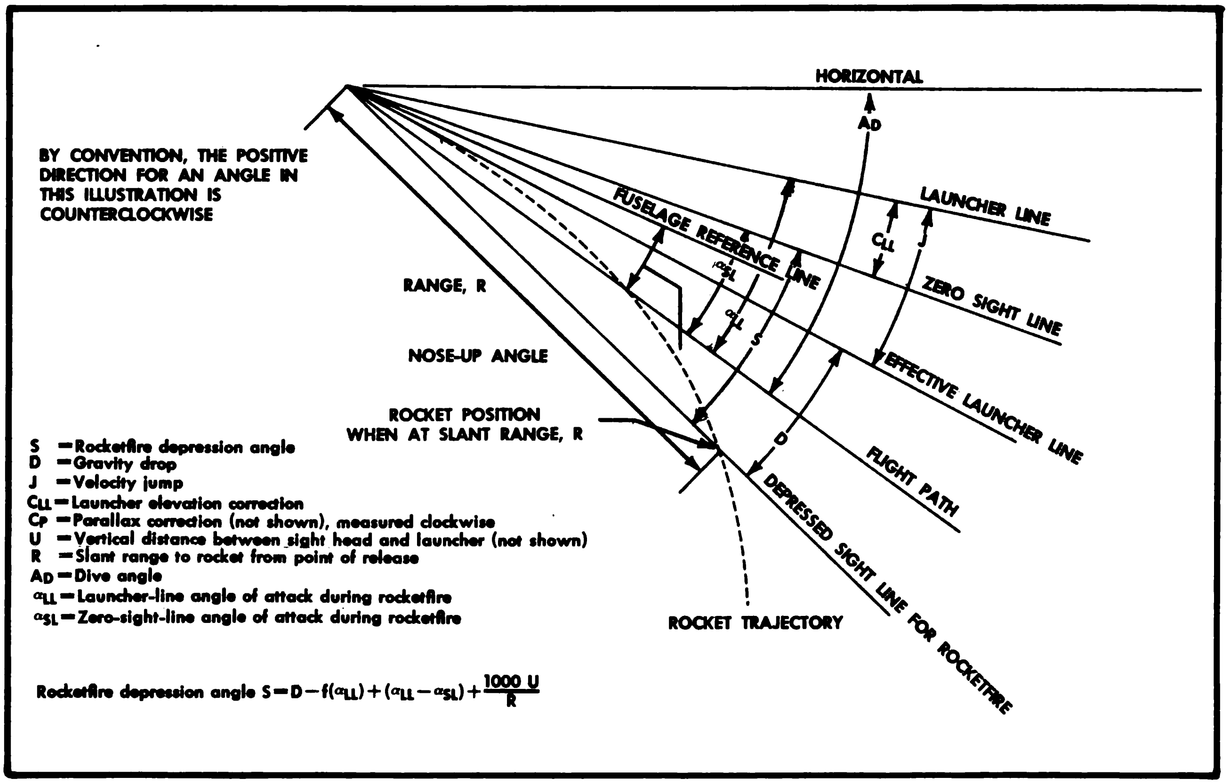

Quantities Used in Calculating the Rocketfire Depression Angle

Digitized by Google

clockwise direction to agree with the aircraft coordinate system. This means that the quantities S, J, and D, which are shown as clockwise angles, must bear a negative sign in calculation. The quantities labeled in the diagram are defined as follows:

Launcher line, the direction of the longitudinal axis of the rocket when the rocket is mounted in the rocket launcher.

Zero sight line, the zero position of the sightline for gunfire, usually parallel to the flight path for gunfire.

Effective launcher line, the flight path of the rocket for the first instant after launching, and from which gravity drop is measured. This line lies between the launcher line and the flight path, the exact position being governed by the velocity jump.

Flight path, the path traced by the center of gravity of the launching aircraft; effectively, the direction of flight. The flight path is usually related to specified conditions of gross weight, aircraft velocity and altitude.

Sight line for Rocketfire, a straight line from the pilot's eye to the tracking index (pipper) when the sight line has been depressed for rocketfire.

Slant range, the distance from the aircraft to the target, measured along the sight line for rocket fire.

Parallax correction (C_p), a correction for sighting error that results because the sight line originates at a point above the rocket launcher. The parallax correction is measured clockwise and is therefore negative. This angle, in mils, is found from the relation $C_p = \frac{1{,}000U}{R}$, where U is the vertical parallax distance from a rocket to the sight head and R is the slant range (both U and R must be given in the same unit).

Propellent temperature, the temperature of the rocket propellent just prior to ignition.

Dive angle (A_D), the angle from the horizontal to the flight path.

Rocketfire depression angle (*S*), the angle from the zero sight line (the sight line in zero lead positions) to the sight line for rocketfire. This angle must be computed for each set of rocket attack conditions.

Gravity drop (*D*), the gravity drop angle of the rocket, measured from the effective launcher line to the sight line for rocketfire. Gravity drop varies with the type of rocket, propellent temperature, speed and dive angle of the launching aircraft, and slant range. The gravity drop given in the table on pages 00-00 apply to targets at sea level, and must be corrected for other altitudes, as described later in this appendix.

Velocity jump (*J*), the vertical angle through which the rocket jumps from the launcher line immediately after launching, thereby establishing the direction of the effective launcher line. The jump angle is the product of the launching factor and the launcher-line angle of attack.

Launching factor (*f*), a numerical factor used to calculate the velocity jump, representing the ratio of the velocity jump to the launcher-line angle of attack. The launching factor varies with airspeed, propellent temperature, type of rocket, and launcher design.

Launcher line angle of attack, (α_{LL}), the angle from the flight path to the launcher line during rocketfire. It is found by adding the rocketfire nose-up angle to the fixed angle formed by the fuselage reference line and the launcher line. (These angles may be determined for specific aircraft by reference to applicable technical orders.) *Example:* An aircraft flies 12 mils nose up with a rocket load, and the launcher line is 5 mils above the fuselage reference line. The launcher line angle of attack, $_{LL}$' is therefore 12+5=17 mils.

Launcher elevation correction (C_{LL}), the angle from the zero sight line to the launcher line.

Zero sight line angle of attack ($_{SL}$), the angle from the flight path to the zero sight line during rocketfire. If the sight has been harmonized so that the zero sight line is parallel to the flight path for gunfire, then $_{SL}$ is simply $_{R-G}$, or the difference between the angle of attack for gunfire and the angle of attack for rocketfire. If the zero sight line is not along the flight path, the amount of offset must be recognized. *Example:* During harmonization for gunfire, the zero sight line was set 4 mils below the flight path. The aircraft during gunfire flies 6 mils nose up; during rocketfire

Digitized by Google

it flies 14 mils nose up. Then $_{R\text{-}G}=14-6=8$ mils, and $_{SL}=8-4-4$ mils; i.e., the zero sight line is 4 mils above the flight path for rocketfire.

Computation of Rocketfire Depression Angle

(These data are applicable for use with sights of the K-14 series only.)

The rocketfire depression angle, S, is computed from the equation

$$S=D+J+C_{LL}+C_P$$

When equivalent expressions are substituted, this general equation takes the form

$$S=D-f(\alpha_{LL})+(\alpha_{LL}-{}_{SL})+\frac{1{,}000U}{R}$$

which is referred to and used as the depression angle equation. The algebraic sign to use with each of the angles of the equation must be determined by reference to the illustration on the previous page, which defines the initial and terminal lines of the angle. For example, if the zero sight line is above the flight path, then α_{SL} is measured counterclockwise and is positive. On the other hand, if the zero sight line is below the flight path, then $_{SL}$ is measured clockwise and is negative. The parallax correction, given by the expression $\frac{1{,}000U}{R}$, is always negative.

The following example shows how the depression angle equation is used to calculate the depression angle for a specified set of attack conditions.

Example

CONDITIONS:

Rocket	2.25 inch AR
Slant range, R	1,500 yards
Dive angle, A_D	30°
True airspeed	340 knots
Target altitude	6,000 feet
Propellent temperature	40° F.
Target wind	20 knot head wind
Harmonization position of zero sight line (obtained by interogating harmonizing personnel)	4 mils below flight path for gunfire, or -4 mils
Rocketfire nose-up angle of attack, R	6 mils
Fixed angle from fuselage reference line to launcher line (obtained from aircraft TO for specific aircraft)	10 mils
Parallax from sight to launcher line obtained from TO for specific aircraft)	6 feet

SOLUTION. Determine first the separate terms in the depression angle equation, as follows:

Gravity Drop, D.

Consult the table on gravity drop angles for the 2.25-inch AR to find the drop for a slant range of 1500 yards, 30° dive angle, true airspeed of 340 knots, and a propellent temperature of 40° F. From the table, the uncorrected drop is found to be -38 mils. Projectile drop corrected for the target altitude of 6,000 feet, in the manner explained in the section on altitude correction for gravity drop, is -38 mils.

Velocity Jump, J, equal to $-f$ (α_{LL}).

The launching factor table gives a launching factor of .84 for a speed of 340 knots and a propellent temperature of 40° F. The values in the table are for indicated airspeed, but at low altitudes it is sufficiently accurate to assume that the true airspeed is equal to the indicated airspeed.

The launcher line angle of attack α_{LL} is equal to the sum of the aircraft angle of attack for rocketfire and the fixed launcher angle; i.e., $_{LL}6+10=16$ mils.

The velocity jump is then given by

$$J=\ -f(\alpha_{LL})=\ -.84\times16=13 \text{ mils.}$$

Launcher Elevation Correction, C_{LL}, equal to $\alpha_{LL}-\alpha_{SL}$.

The launcher line angle of attack, α_{LL}, from Step 2, $=16$ mils. The zero sight line angle of attack, α_{SL}, is equal to the sum of the zero sight line angle with respect to the flight path (-4 mils) and the rocketfire nose-up angle of attack, α_R (6 mils), or

$$\alpha_{SL}=\ -4+6=2 \text{ mils}$$

Then $C_{LL}=16\ -2=14$ mils

Digitized by Google

Parallax Correction, C_p, *equal to* $\frac{1{,}000U.}{R}$

From the stated conditions, $U = 6$ feet, $R = 4500$ feet; then

$C_p = \frac{1{,}000}{4{,}500} \times 6 = -1.3 = -1$ mil, approximately (C_p is always negative)

All of the terms in the depression angle equation have now been determined, and the depression angle is found to be

$$S = D - f(\text{LL}) + (\text{LL} - \text{SL}) + \frac{1{,}000U}{R}$$

$$= -36 - 13 + 14 - 1$$

$$= -36 \text{ mils}$$

Aiming Allowance for Wind or Target Motion

(For Use with the K-14A, K-14B, and K-18 sights)

The end result of depressing the sight line by the rocketfire depression angle is to cause the lifting of the launcher line in order to correct for gravity drop and other factors that affect the trajectory of the rocket. *The depression angle accounts only for factors affecting the shape of the rocket trajectory and does not specify where the depressed sight line must be aimed in order for the rocket to hit the target.* When using the K-14A, K-14B, or K-18 sights, the correct aiming point must be determined by reference to conditions at the target, that is, wind or target motion.

The corrections to the aiming point for various wind and target velocities are given in the aiming allowance table, B-11. Note that the same correction is used for wind velocities and target velocities of the same magnitude, because the rate of separation between the target and the rocket is the same in both cases. When allowance is made for wind velocity, the correction is made *upwind* from the target; when allowance is made for target motion, the correction is made *ahead* of the target.

Example

An example will illustrate the use of the table showing aiming allowances for all ranges and airspeeds. Refer to the foregoing problem for which the depression angle of −36 mils is required. In the given conditions a headwind (range wind) of 20 knots was stated. According to the table, the required correction for a 2.25-inch AR fired from a 30° dive into a 20-knot range wind is 16 mils. Therefore, the sight line established by the calculated depression angle must be shifted upwind by a 16-mil angle to correct for the headwind.

Altitude Correction for Gravity Drop

The gravity drop data in the rocket ballistic tables are prepared for targets at sea level and must be corrected for targets above sea level. The correction in mils, D, to the gravity drop, D is

$$\Delta D = KD\left(\frac{d}{d_o} - 1\right)$$

where

ΔD = Correction in mils

K = Altitude factor

D = Gravity drop in mils given in the tables

$\frac{d}{d_o}$ = Relative air density at the target altitude

Values of $\frac{d}{d_o}$ for the standard atmosphere are:

Altitude in Feet	Relative Density $\left(\frac{d}{d_o}\right)$
2,000	0.94
4,000	0.88
6,000	0.83
8,000	0.78
10,000	0.73

Example

A sample drop correction based on the data presented in the sample problem shows how the correction is calculated:

Gravity drop (from gravity drop angle table) = −38 mils

K (from altitude factor table) = 0.367

$\Delta D = 0.367 - 38 \ (0.83 - 1)$

$= +2.37 =$ approximately $+2$ mil

Corrected gravity drop $= -38 + 2 = -36$ mils

Digitized by Google

[redacted]	[redacted]	[redacted]	[redacted]	[redacted]	[redacted]
0	0.87	220	264	993	756
		300	346	970	863
		380	438	946	970
		440	506	926	1,049
40	0.65	220	264	1,085	594
		300	346	1,067	676
		380	438	1,048	758
		440	506	1,033	819
70	0.52	220	264	1,096	478
		300	346	1,082	545
		380	438	1,067	611
		440	506	1,054	660
100	0.39	220	264	1,102	360
		300	346	1,091	410
		380	438	1,079	461
		440	506	1,069	498

Burning Period Data for the 2.25-Inch Aircraft Rocket

[redacted]	[redacted]	[redacted]			
		0° F.	40° F.	70° F.	100° F.
200	230	.80	.76	.73	.70
220	254	.83	.79	.76	.73
240	276	.85	.81	.78	.75
260	300	.86	.83	.80	.77
280	323	.87	.84	.82	.79
300	346	.88	.85	.83	.80
320	369	.89	.86	.84	.81
340	392	.90	.87	.85	.82
360	415	.90	.88	.86	.83
380	437	.91	.89	.87	.85
400	461	.92	.90	.88	.86
420	484	.92	.90	.89	.87
440	506	.92	.91	.90	.87

Launching Factor for the 2.25-Inch Aircraft Rocket

Digitized by Google

DIVE ANGLE = 0°

**230 M.P.H.
200 KNOTS**

Slant Range in Yards	PROPELLENT TEMPERATURE 0° F. −19° C.	40° F. 4° C.	70° F. 21° C.	100° F. 38° C.
500	36	29	26	23
600	40	32	28	25
800	47	38	34	31
1,000	55	45	41	37
1,200	62	52	48	44
1,500	75	64	60	56
2,000	98	85	81	78

**253 M.P.H.
220 KNOTS**

Slant Range in Yards	PROPELLENT TEMPERATURE 0° F. −19° C.	40° F. 4° C.	70° F. 21° C.	100° F. 38° C.
500	34	27	24	21
600	38	30	27	24
800	44	36	33	30
1,000	52	42	39	36
1,200	59	49	46	43
1,500	71	60	57	54
2,000	94	81	78	75

**276 M.P.H.
240 KNOTS**

Slant Range in Yards	PROPELLENT TEMPERATURE 0° F. −19° C.	40° F. 4° C.	70° F. 21° C.	100° F. 38° C.
500	32	26	23	20
600	36	29	26	23
800	42	34	31	28
1,000	49	40	37	34
1,200	56	47	44	41
1,500	68	58	54	51
2,000	90	78	74	72

**300 M.P.H.
260 KNOTS**

Slant Range in Yards	PROPELLENT TEMPERATURE 0° F. −19° C.	40° F. 4° C.	70° F. 21° C.	100° F. 38° C.
500	30	25	22	19
600	34	27	24	21
800	40	33	30	27
1,000	46	38	35	32
1,200	53	45	42	39
1,500	65	55	52	49
2,000	86	75	71	68

**323 M.P.H.
280 KNOTS**

Slant Range in Yards	PROPELLENT TEMPERATURE 0° F. −19° C.	40° F. 4° C.	70° F. 21° C.	100° F. 38° C.
500	29	23	20	18
600	32	26	23	21
800	38	31	28	26
1,000	44	37	34	31
1,200	51	43	40	37
1,500	62	53	50	47
2,000	82	71	68	66

**348 M.P.H.
300 KNOTS**

Slant Range in Yards	PROPELLENT TEMPERATURE 0° F. −19° C.	40° F. 4° C.	70° F. 21° C.	100° F. 38° C.
500	27	22	19	17
600	30	25	22	20
800	36	30	27	24
1,000	42	35	32	30
1,200	48	41	38	35
1,500	58	50	47	45
2,000	78	69	66	63

**369 M.P.H.
320 KNOTS**

Slant Range in Yards	PROPELLENT TEMPERATURE 0° F. −19° C.	40° F. 4° C.	70° F. 21° C.	100° F. 38° C.
500	25	21	18	16
600	28	23	21	19
800	34	28	25	23
1,000	40	33	31	28
1,200	46	39	36	34
1,500	56	48	45	43
2,000	75	66	63	61

**392 M.P.H.
340 KNOTS**

Slant Range in Yards	PROPELLENT TEMPERATURE 0° F. −19° C.	40° F. 4° C.	70° F. 21° C.	100° F. 38° C.
500	24	20	18	16
600	27	22	20	18
800	32	27	24	22
1,000	38	32	29	27
1,200	44	37	35	33
1,500	53	46	43	41
2,000	72	63	60	58

**415 M.P.H.
360 KNOTS**

Slant Range in Yards	PROPELLENT TEMPERATURE 0° F. −19° C.	40° F. 4° C.	70° F. 21° C.	100° F. 38° C.
500	23	19	17	15
600	26	21	19	17
800	31	25	23	21
1,000	36	30	28	26
1,200	42	35	33	31
1,500	51	44	41	39
2,000	69	60	58	56

**438 M.P.H.
380 KNOTS**

Slant Range in Yards	PROPELLENT TEMPERATURE 0° F. −19° C.	40° F. 4° C.	70° F. 21° C.	100° F. 38° C.
500	22	18	16	14
600	24	20	18	16
800	29	24	22	20
1,000	34	29	27	25
1,200	40	34	32	30
1,500	49	42	40	38
2,000	66	58	56	54

**461 M.P.H.
400 KNOTS**

Slant Range in Yards	PROPELLENT TEMPERATURE 0° F. −19° C.	40° F. 4° C.	70° F. 21° C.	100° F. 38° C.
500	21	17	15	14
600	23	19	17	16
800	28	23	21	20
1,000	33	28	26	24
1,200	38	33	30	28
1,500	47	40	38	36
2,000	63	56	54	52

**484 M.P.H.
420 KNOTS**

Slant Range in Yards	PROPELLENT TEMPERATURE 0° F. −19° C.	40° F. 4° C.	70° F. 21° C.	100° F. 38° C.
500	20	17	15	13
600	22	19	17	15
800	26	23	21	19
1,000	31	27	25	23
1,200	36	31	29	27
1,500	45	39	37	35
2,000	61	54	52	50

Gravity Drop Angles for the 2.25 Inch Aircraft Rocket, In Mils

DIVE ANGLE = 20°

253 M.P.H.
220 KNOTS

Slant Range in Yards	PROPELLENT TEMPERATURE			
	0° F. −19° C.	40° F. 4° C.	70° F. 21° C.	100° F. 38° C.
500	32	25	22	20
600	35	28	25	22
800	41	33	30	27
1,000	47	39	36	33
1,200	54	45	42	39
1,500	64	54	51	49
2,000	83	72	69	67

276 M.P.H.
240 KNOTS

Slant Range in Yards	PROPELLENT TEMPERATURE			
	0° F. −19° C.	40° F. 4° C.	70° F. 21° C.	100° F. 38° C.
500	30	24	21	19
600	33	26	23	21
800	39	31	29	26
1,000	45	37	34	31
1,200	51	43	40	37
1,500	61	52	49	47
2,000	79	69	66	64

300 M.P.H.
260 KNOTS

Slant Range in Yards	PROPELLENT TEMPERATURE			
	0° F. −19° C.	40° F. 4° C.	70° F. 21° C.	100° F. 38° C.
500	28	23	20	18
600	31	25	22	20
800	37	30	27	25
1,000	43	35	32	30
1,200	49	41	38	36
1,500	58	50	47	45
2,000	76	66	63	61

323 M.P.H.
280 KNOTS

Slant Range in Yards	PROPELLENT TEMPERATURE			
	0° F. −19° C.	40° F. 4° C.	70° F. 21° C.	100° F. 38° C.
500	27	22	19	17
600	29	24	21	19
800	34	29	26	24
1,000	40	34	31	29
1,200	46	39	36	34
1,500	56	48	45	43
2,000	73	64	61	59

348 M.P.H.
300 KNOTS

Slant Range in Yards	PROPELLENT TEMPERATURE			
	0° F. −19° C.	40° F. 4° C.	70° F. 21° C.	100° F. 38° C.
500	25	20	18	16
600	28	22	20	18
800	33	27	25	23
1,000	38	32	29	27
1,200	44	37	34	32
1,500	53	45	43	41
2,000	70	60	59	57

369 M.P.H.
320 KNOTS

Slant Range in Yards	PROPELLENT TEMPERATURE			
	0° F. −19° C.	40° F. 4° C.	70° F. 21° C.	100° F. 38° C.
500	24	20	17	16
600	26	22	19	18
800	31	26	23	22
1,000	36	31	28	26
1,200	42	36	33	31
1,500	51	44	41	39
2,000	67	59	56	54

392 M.P.H.
340 KNOTS

Slant Range in Yards	PROPELLENT TEMPERATURE			
	0° F. −19° C.	40° F. 4° C.	70° F. 21° C.	100° F. 38° C.
500	23	18	16	15
600	25	20	18	17
800	30	24	22	21
1,000	35	29	27	25
1,200	40	34	32	30
1,500	48	42	40	38
2,000	64	56	54	52

415 M.P.H.
360 KNOTS

Slant Range in Yards	PROPELLENT TEMPERATURE			
	0° F. −19° C.	40° F. 4° C.	70° F. 21° C.	100° F. 38° C.
500	21	18	16	14
600	24	20	18	16
800	28	24	22	20
1,000	33	28	26	24
1,200	38	32	30	28
1,500	46	40	38	36
2,000	62	54	52	50

438 M.P.H.
380 KNOTS

Slant Range in Yards	PROPELLENT TEMPERATURE			
	0° F. −19° C.	40° F. 4° C.	70° F. 21° C.	100° F. 38° C.
500	20	17	15	14
600	23	19	17	15
800	27	23	21	19
1,000	31	27	25	23
1,200	36	31	29	27
1,500	44	38	36	35
2,000	59	52	50	49

461 M.P.H.
400 KNOTS

Slant Range in Yards	PROPELLENT TEMPERATURE			
	0° F. −19° C.	40° F. 4° C.	70° F. 21° C.	100° F. 38° C.
500	19	16	14	13
600	22	18	16	15
800	26	22	20	18
1,000	30	26	24	22
1,200	35	30	28	26
1,500	42	37	35	33
2,000	57	50	48	47

484 M.P.H.
420 KNOTS

Slant Range in Yards	PROPELLENT TEMPERATURE			
	0° F. −19° C.	40° F. 4° C.	70° F. 21° C.	100° F. 38° C.
500	18	15	14	12
600	21	17	16	14
800	25	21	19	17
1,000	29	25	23	21
1,200	33	29	27	25
1,500	41	36	34	32
2,000	55	48	46	45

507 M.P.H.
440 KNOTS

Slant Range in Yards	PROPELLENT TEMPERATURE			
	0° F. −19° C.	40° F. 4° C.	70° F. 21° C.	100° F. 38° C.
500	18	15	13	12
600	20	17	15	14
800	24	20	18	17
1,000	28	24	22	20
1,200	32	28	26	24
1,500	39	34	32	31
2,000	52	47	45	44

Gravity Drop Angles for the 2.25 Inch Aircraft Rocket, in Mils Dive Angle 20°

Digitized by Google

DIVE ANGLE = 30°

253 M.P.H.
220 KNOTS

Slant Range in Yards	PROPELLENT TEMPERATURE			
	0° F. −19° C.	40° F. 4° C.	70° F. 21° C.	100° F. 38° C.
500	29	23	20	18
600	33	26	23	20
800	37	30	27	25
1,000	43	35	32	30
1,200	49	41	38	36
1,500	58	49	46	44
2,000	74	65	62	60

276 M.P.H.
240 KNOTS

Slant Range in Yards	PROPELLENT TEMPERATURE			
	0° F. −19° C.	40° F. 4° C.	70° F. 21° C.	100° F. 38° C.
500	27	22	19	17
600	30	24	21	19
800	35	29	26	23
1,000	40	34	31	28
1,200	46	39	36	34
1,500	55	47	44	42
2,000	71	62	60	58

300 M.P.H.
260 KNOTS

Slant Range in Yards	PROPELLENT TEMPERATURE			
	0° F. −19° C.	40° F. 4° C.	70° F. 21° C.	100° F. 38° C.
500	26	21	18	16
600	28	23	21	19
800	33	27	25	23
1,000	38	32	29	27
1,200	44	37	34	32
1,500	53	45	42	40
2,000	68	60	58	56

323 M.P.H.
280 KNOTS

Slant Range in Yards	PROPELLENT TEMPERATURE			
	0° F. −19° C.	40° F. 4° C.	70° F. 21° C.	100° F. 38° C.
500	24	20	17	15
600	27	22	20	18
800	32	26	24	22
1,000	37	30	28	26
1,200	42	35	33	31
1,500	50	43	41	39
2,000	65	57	55	53

348 M.P.H.
300 KNOTS

Slant Range in Yards	PROPELLENT TEMPERATURE			
	0° F. −19° C.	40° F. 4° C.	70° F. 21° C.	100° F. 38° C.
500	23	19	17	15
600	25	21	19	17
800	30	25	23	21
1,000	35	29	27	25
1,200	40	34	32	30
1,500	48	41	39	37
2,000	63	55	53	51

369 M.P.H.
320 KNOTS

Slant Range in Yards	PROPELLENT TEMPERATURE			
	0° F. −19° C.	40° F. 4° C.	70° F. 21° C.	100° F. 38° C.
500	22	18	16	14
600	24	20	18	16
800	28	24	22	20
1,000	33	28	26	24
1,200	38	32	30	28
1,500	46	39	37	35
2,000	60	53	51	49

392 M.P.H.
340 KNOTS

Slant Range in Yards	PROPELLENT TEMPERATURE			
	0° F. −19° C.	40° F. 4° C.	70° F. 21° C.	100° F. 38° C.
500	21	17	15	13
600	23	19	17	15
800	27	23	21	19
1,000	31	27	25	23
1,200	36	31	29	27
1,500	44	38	36	34
2,000	58	51	49	47

415 M.P.H.
360 KNOTS

Slant Range in Yards	PROPELLENT TEMPERATURE			
	0° F. −19° C.	40° F. 4° C.	70° F. 21° C.	100° F. 38° C.
500	20	16	14	13
600	22	18	16	15
800	26	22	20	18
1,000	30	26	24	22
1,200	35	30	28	26
1,500	42	36	34	33
2,000	56	49	47	46

438 M.P.H.
380 KNOTS

Slant Range in Yards	PROPELLENT TEMPERATURE			
	0° F. −19° C.	40° F. 4° C.	70° F. 21° C.	100° F. 38° C.
500	19	16	14	12
600	21	17	15	14
800	25	21	19	17
1,000	29	25	23	21
1,200	33	29	27	25
1,500	40	35	33	32
2,000	53	47	45	44

461 M.P.H.
400 KNOTS

Slant Range in Yards	PROPELLENT TEMPERATURE			
	0° F. −19° C.	40° F. 4° C.	70° F. 21° C.	100° F. 38° C.
500	18	15	13	12
600	20	17	15	14
800	23	20	18	17
1,000	27	23	22	20
1,200	32	27	26	24
1,500	39	34	32	30
2,000	52	46	44	42

484 M.P.H.
420 KNOTS

Slant Range in Yards	PROPELLENT TEMPERATURE			
	0° F. −19° C.	40° F. 4° C.	70° F. 21° C.	100° F. 38° C.
500	17	14	13	11
600	19	16	14	13
800	23	19	17	16
1,000	27	23	21	19
1,200	31	27	25	23
1,500	37	32	30	29
2,000	50	44	42	41

507 M.P.H.
440 KNOTS

Slant Range in Yards	PROPELLENT TEMPERATURE			
	0° F. −19° C.	40° F. 4° C.	70° F. 21° C.	100 F. 38° C.
500	16	14	12	11
600	18	15	14	12
800	21	18	17	15
1,000	25	21	20	19
1,200	29	25	24	22
1,500	37	31	29	28
2,000	48	42	41	40

Gravity Drop Angles for the 2.25 Inch Aircraft Rocket, in Mils Dive Angle 30°

Digitized by Google

DIVE ANGLE = 40°

253 M.P.H.
220 KNOTS

Slant Range in Yards	PROPELLENT TEMPERATURE			
	0° F. −19° C.	40° F. 4° C.	70° F. 21° C.	100° F. 38° C.
500	25	20	18	16
600	28	22	20	18
800	32	26	24	22
1,000	37	31	28	26
1,200	42	36	33	31
1,500	50	43	41	39
2,000	64	56	54	52

276 M.P.H.
240 KNOTS

Slant Range in Yards	PROPELLENT TEMPERATURE			
	0° F. −19° C.	40° F. 4° C.	70° F. 21° C.	100° F. 38° C.
500	24	19	17	15
600	26	21	19	17
800	30	25	23	21
1,000	35	29	27	25
1,200	40	34	32	30
1,500	48	41	39	37
2,000	62	54	52	50

300 M.P.H.
260 KNOTS

Slant Range in Yards	PROPELLENT TEMPERATURE			
	0° F. −19° C.	40° F. 4° C.	70° F. 21° C.	100° F. 38° C.
500	23	18	16	14
600	25	20	18	16
800	29	24	22	20
1,000	33	28	26	24
1,200	38	32	30	28
1,500	46	39	37	35
2,000	59	52	50	48

323 M.P.H.
280 KNOTS

Slant Range in Yards	PROPELLENT TEMPERATURE			
	0° F. −19° C.	40° F. 4° C.	70° F. 21° C.	100° F. 38° C.
500	21	17	15	13
600	24	19	17	15
800	28	23	21	19
1,000	32	27	25	23
1,200	36	31	29	27
1,500	44	38	36	34
2,000	57	50	48	46

348 M.P.H.
300 KNOTS

Slant Range in Yards	PROPELLENT TEMPERATURE			
	0° F. −19° C.	40° F. 4° C.	70° F. 21° C.	100° F. 38° C.
500	20	16	15	13
600	22	18	16	14
800	26	22	20	18
1,000	30	26	24	22
1,200	35	30	28	26
1,500	42	36	34	32
2,000	54	48	46	45

369 M.P.H.
320 KNOTS

Slant Range in Yards	PROPELLENT TEMPERATURE			
	0° F. −19° C.	40° F. 4° C.	70° F. 21° C.	100° F. 38° C.
500	19	16	14	12
600	21	18	16	14
800	25	21	19	17
1,000	29	25	23	21
1,200	33	28	27	25
1,500	40	34	33	31
2,000	52	46	44	43

392 M.P.H.
340 KNOTS

Slant Range in Yards	PROPELLENT TEMPERATURE			
	0° F. −19° C.	40° F. 4° C.	70° F. 21° C.	100° F. 38° C.
500	18	15	13	12
600	20	17	15	13
800	24	20	18	16
1,000	28	24	22	20
1,200	32	27	25	24
1,500	38	33	31	30
2,000	50	44	43	41

415 M.P.H.
360 KNOTS

Slant Range in Yards	PROPELLENT TEMPERATURE			
	0° F. −19° C.	40° F. 4° C.	70° F. 21° C.	100° F. 38° C.
500	17	14	13	11
600	19	16	14	13
800	22	19	17	16
1,000	26	22	21	19
1,200	30	26	25	23
1,500	37	32	30	29
2,000	48	42	41	40

438 M.P.H.
380 KNOTS

Slant Range in Yards	PROPELLENT TEMPERATURE			
	0° F. −19° C.	40° F. 4° C.	70° F. 21° C.	100° F. 38° C.
500	16	14	12	11
600	18	15	14	12
800	21	18	17	15
1,000	25	21	20	18
1,200	29	25	23	22
1,500	36	30	29	28
2,000	47	41	40	38

461 M.P.H.
400 KNOTS

Slant Range in Yards	PROPELLENT TEMPERATURE			
	0° F. −19° C.	40° F. 4° C.	70° F. 21° C.	100° F. 38° C.
500	16	13	12	10
600	18	15	13	12
800	21	18	16	15
1,000	24	21	19	18
1,200	28	24	22	21
1,500	34	29	28	27
2,000	45	39	38	37

484 M.P.H.
420 KNOTS

Slant Range in Yards	PROPELLENT TEMPERATURE			
	0° F. −19° C.	40° F. 4° C.	70° F. 21° C.	100° F. 38° C.
500	15	13	11	10
600	17	14	12	11
800	20	17	15	14
1,000	23	20	18	17
1,200	26	23	21	20
1,500	32	28	27	26
2,000	43	38	37	36

507 M.P.H.
440 KNOTS

Slant Range in Yards	PROPELLENT TEMPERATURE			
	0° F. −19° C.	40° F. 4° C.	70° F. 21° C.	100° F. 38° C.
500	14	12	11	10
600	16	13	12	11
800	19	16	15	13
1,000	22	19	18	16
1,200	25	22	21	20
1,500	31	27	26	25
2,000	41	37	36	34

Gravity Drop Angles for the 2.25 Inch Aircraft Rocket, in Mils Dive Angle 40°

Digitized by Google

DIVE ANGLE = 60°

253 M.P.H.
220 KNOTS

Slant Range in Yards	PROPELLENT TEMPERATURE 0° F. −19° C.	40° F. 4° C.	70° F. 21° C.	100° F. 38° C.
500	16	13	12	10
600	18	14	13	12
800	21	17	15	14
1,000	24	20	18	17
1,200	27	23	21	20
1,500	32	28	26	24
2,000	40	35	34	33

276 M.P.H.
240 KNOTS

Slant Range in Yards	PROPELLENT TEMPERATURE 0° F. −19° C.	40° F. 4° C.	70° F. 21° C.	100° F. 38° C.
500	15	13	11	10
600	17	14	12	11
800	20	17	15	14
1,000	23	20	18	16
1,200	26	23	21	19
1,500	30	26	25	24
2,000	39	34	33	32

300 M.P. H.
260 KNOTS

Slant Range in Yards	PROPELLENT TEMPERATURE 0° F. −19° C.	40° F. 4° C.	70° F. 21° C.	100° F. 38° C.
500	14	12	11	9
600	16	13	12	11
800	19	15	14	13
1,000	22	18	17	15
1,200	25	21	20	18
1,500	29	25	24	22
2,000	37	33	32	30

323 M.P.H.
280 KNOTS

Slant Range in Yards	PROPELLENT TEMPERATURE 0° F. −19° C.	40° F. 4° C.	70° F. 21° C.	100 F. 38° C.
500	14	11	10	9
600	15	12	11	10
800	18	14	13	12
1,000	21	17	16	15
1,200	24	20	19	18
1,500	28	24	23	22
2,000	36	32	31	29

348 M.P.H.
300 KNOTS

Slant Range in Yards	PROPELLENT TEMPERATURE 0° F. −19° C.	40° F. 4° C.	70° F. 21° C.	100° F. 38° C.
500	13	11	9	8
600	14	12	11	10
800	17	14	13	12
1,000	20	16	15	14
1,200	23	19	18	17
1,500	27	23	22	21
2,000	34	30	29	28

369 M.P.H.
320 KNOTS

Slant Range in Yards	PROPELLENT TEMPERATURE 0° F. −19° C.	40° F. 4° C.	70° F. 21° C.	100° F. 38° C.
500	12	10	9	8
600	14	11	10	9
800	16	13	12	11
1,000	19	15	14	13
1,200	22	18	17	16
1,500	26	22	21	20
2,000	33	29	28	27

392 M.P.H.
340 KNOTS

Slant Range in Yards	PROPELLENT TEMPERATURE 0° F. −19° C.	40° F. 4° C.	70° F. 21° C.	100° F. 38° C.
500	12	10	9	8
600	13	11	10	9
800	15	13	12	11
1,000	18	15	14	13
1,200	21	17	16	15
1,500	25	21	20	19
2,000	32	28	27	26

415 M.P.H.
360 KNOTS

Slant Range in Yards	PROPELLENT TEMPERATURE 0° F. −19° C.	40° F. 4° C.	70° F. 21° C.	100° F. 38° C.
500	11	9	8	7
600	12	10	9	8
800	14	12	11	10
1,000	17	14	13	12
1,200	20	17	16	15
1,500	23	20	19	18
2,000	31	27	26	25

438 M.P.H.
380 KNOTS

Slant Range in Yards	PROPELLENT TEMPERATURE 0° F. −19° C.	40° F. 4° C.	70° F. 21° C.	100° F. 38° C.
500	11	9	8	7
600	12	10	9	8
800	14	12	11	10
1,000	16	14	13	12
1,200	19	16	15	14
1,500	23	20	19	18
2,000	30	26	25	24

461 M.P.H.
400 KNOTS

Slant Range in Yards	PROPELLENT TEMPERATURE 0° F. −19° C.	40° F. 4° C.	70° F. 21° C.	100° F. 38° C.
500	10	9	8	7
600	11	10	9	8
800	13	11	10	9
1,000	15	13	12	11
1,200	18	15	14	13
1,500	22	19	18	17
2,000	28	25	24	23

484 M.P.H.
420 KNOTS

Slant Range in Yards	PROPELLENT TEMPERATURE 0° F. −19° C.	40° F. 4° C.	70° F. 21° C.	100° F. 38° C.
500	9	8	7	6
600	11	9	8	7
800	12	11	10	9
1,000	15	13	12	11
1,200	17	15	14	13
1,500	21	18	17	16
2,000	27	24	23	23

507 M.P.H.
440 KNOTS

Slant Range in Yards	PROPELLENT TEMPERATURE 0° F. −19° C.	40° F. 4° C.	70° F. 21° C.	100° F. 38° C.
500	9	8	7	6
600	10	9	8	7
800	12	10	10	9
1,000	14	12	12	11
1,200	16	14	14	13
1,500	20	18	17	16
2,000	26	23	22	22

NOTE: All gravity drop angles in this table are negative when used in the calculations for the rocketfire depression angle.

Gravity Drop Angles for 2.25 Inch Aircraft Rocket, in Mils Dive Angle 60°

Digitized by Google

DIVE ANGLE = 20°

253 M.P.H.
220 KNOTS

Slant Range in Yards	PROPELLENT TEMPERATURE			
	0° F. −19° C.	40° F. 4° C.	70° F. 21° C.	100° F. 38° C.
500	1.5	1.3	1.3	1.2
600	1.7	1.5	1.5	1.5
800	2.2	2.0	2.0	1.9
1,000	2.7	2.5	2.5	2.5
1,200	3.3	3.1	3.0	3.0
1,500	4.1	3.9	3.9	3.8
2,000	5.7	5.4	5.3	5.3

276 M.P.H.
240 KNOTS

Slant Range in Yards	PROPELLENT TEMPERATURE			
	0° F. −19° C.	40° F. 4° C.	70° F. 21° C.	100° F. 38° C.
500	1.4	1.3	1.2	1.2
600	1.6	1.5	1.5	1.4
800	2.1	2.0	1.9	1.9
1,000	2.7	2.5	2.4	2.4
1,200	3.2	3.0	3.0	2.9
1,500	4.1	3.8	3.8	3.8
2,000	5.6	5.3	5.2	5.2

300 M.P.H.
260 KNOTS

Slant Range in Yards	PROPELLENT TEMPERATURE			
	0° F. −19° C.	40° F. 4° C.	70° F. 21° C.	100° F. 38° C.
500	1.4	1.2	1.2	1.2
600	1.6	1.5	1.4	1.4
800	2.1	1.9	1.9	1.9
1,000	2.6	2.4	2.4	2.4
1,200	3.1	2.9	2.9	2.9
1,500	4.0	3.8	3.7	3.7
2,000	5.5	5.2	5.2	5.1

323 M.P.H.
280 KNOTS

Slant Range in Yards	PROPELLENT TEMPERATURE			
	0° F. −19° C.	40° F. 4° C.	70° F. 21° C.	100° F. 38° C.
500	1.3	1.2	1.2	1.1
600	1.6	1.4	1.4	1.4
800	2.0	1.9	1.9	1.8
1,000	2.5	2.4	2.3	2.3
1,200	3.1	2.9	2.8	2.8
1,500	3.9	3.7	3.7	3.6
2,000	5.4	5.1	5.1	5.1

348 M.P.H.
300 KNOTS

Slant Range in Yards	PROPELLENT TEMPERATURE			
	0° F. −19° C.	40° F. 4° C.	70° F. 21° C.	100° F. 38° C.
500	1.3	1.2	1.2	1.1
600	1.5	1.4	1.4	1.3
800	2.0	1.8	1.8	1.8
1,000	2.5	2.3	2.3	2.3
1,200	3.0	2.8	2.8	2.8
1,500	3.8	3.6	3.6	3.6
2,000	5.3	5.0	5.0	5.0

369 M.P.H.
320 KNOTS

Slant Range in Yards	PROPELLENT TEMPERATURE			
	0° F. −19° C.	40° F. 4° C.	70° F. 21° C.	100° F. 38° C.
500	1.3	1.2	1.1	1.1
600	1.5	1.4	1.3	1.3
800	2.0	1.8	1.8	1.7
1,000	2.4	2.3	2.2	2.2
1,200	3.0	2.8	2.7	2.7
1,500	3.8	3.6	3.5	3.5
2,000	5.2	4.9	4.9	4.9

392 M.P.H.
340 KNOTS

Slant Range in Yards	PROPELLENT TEMPERATURE			
	0° F. −19° C.	40° F. 4° C.	70° F. 21° C.	100° F. 38° C.
500	1.3	1.1	1.1	1.1
600	1.5	1.4	1.3	1.3
800	1.9	1.8	1.7	1.7
1,000	2.4	2.2	2.2	2.2
1,200	2.9	2.7	2.7	2.6
1,500	3.7	3.5	3.4	3.4
2,000	5.1	4.9	4.8	4.8

415 M.P.H.
360 KNOTS

Slant Range in Yards	PROPELLENT TEMPERATURE			
	0° F. −19° C.	40° F. 4° C.	70° F. 21° C.	100° F. 38° C.
500	1.2	1.1	1.1	1.0
600	1.4	1.3	1.3	1.2
800	1.9	1.7	1.7	1.7
1,000	2.3	2.2	2.1	2.1
1,200	2.8	2.7	2.6	2.6
1,500	3.6	3.4	3.4	3.4
2,000	5.0	4.8	4.7	4.7

438 M.P.H.
380 KNOTS

Slant Range in Yards	PROPELLENT TEMPERATURE			
	0° F. −19° C.	40° F. 4° C.	70° F. 21° C.	100° F. 38° C.
500	1.2	1.1	1.1	1.0
600	1.4	1.3	1.3	1.2
800	1.8	1.7	1.7	1.6
1,000	2.3	2.1	2.1	2.1
1,200	2.8	2.6	2.6	2.5
1,500	3.5	3.3	3.3	3.3
2,000	4.9	4.7	4.7	4.6

461 M.P.H.
400 KNOTS

Slant Range in Yards	PROPELLENT TEMPERATURE			
	0° F. −19° C.	40° F. 4° C.	70° F. 21° C.	100° F. 38° C.
500	1.2	1.1	1.0	1.0
600	1.4	1.3	1.2	1.2
800	1.8	1.7	1.6	1.6
1,000	2.3	2.1	2.1	2.0
1,200	2.7	2.6	2.5	2.5
1,500	3.5	3.3	3.2	3.2
2,000	4.9	4.6	4.6	4.6

484 M.P.H.
420 KNOTS

Slant Range in Yards	PROPELLENT TEMPERATURE			
	0° F. −19° C.	40° F. 4° C.	70° F. 21° C.	100° F. 38° C.
500	1.2	1.1	1.0	1.0
600	1.4	1.2	1.2	1.2
800	1.8	1.6	1.6	1.6
1,000	2.2	2.1	2.0	2.0
1,200	2.7	2.5	2.5	2.4
1,500	3.4	3.2	3.2	3.2
2,000	4.8	4.5	4.5	4.5

507 M.P.H.
440 KNOTS

Slant Range in Yards	PROPELLENT TEMPERATURE			
	0° F. −19° C.	40° F. 4° C.	70° F. 21° C.	100° F. 38° C.
500	1.1	1.0	1.0	1.0
600	1.3	1.2	1.2	1.1
800	1.7	1.6	1.6	1.5
1,000	2.1	2.0	2.0	2.0
1,200	2.6	2.5	2.4	2.4
1,500	3.4	3.2	3.1	3.1
2,000	4.7	4.5	4.4	4.4

Time of Flight for the 2.25 Inch Aircraft Rocket in Seconds

Digitized by Google

SLANT RANGE IN YARDS	TRUE AIRSPEED 200–400 KNOTS 230–460 M.P.H.
500	0.111
600	0.134
800	0.183
1,000	0.233
1,200	0.285
1,500	0.367
2,000	0.515

Altitude Factor for the 2.25 Inch Aircraft Rocket

AIMING ALLOWANCE IN MILS FOR ALL RANGES AND AIRSPEEDS			
DIVE ANGLE	DIRECTION OF WIND OR MOTION		
	CROSS	OBLIQUE	RANGE
0°	16	1	1
20°	16	7	5
30°	16	10	8
40°	16	12	10
50°	16	13	12
60°	16	14	13
70°	16	15	14
	(For Use with the K-14A, K-14B, and K-18 Sights)		
For wind, apply the aiming allowance upwind. For target motion, apply the aiming allowance ahead of the target, in line with the target motion.			

Aiming Allowance in Mils for Each 10 Knots of Wind or Target Motion for the 2.25 Inch Aircraft Rocket

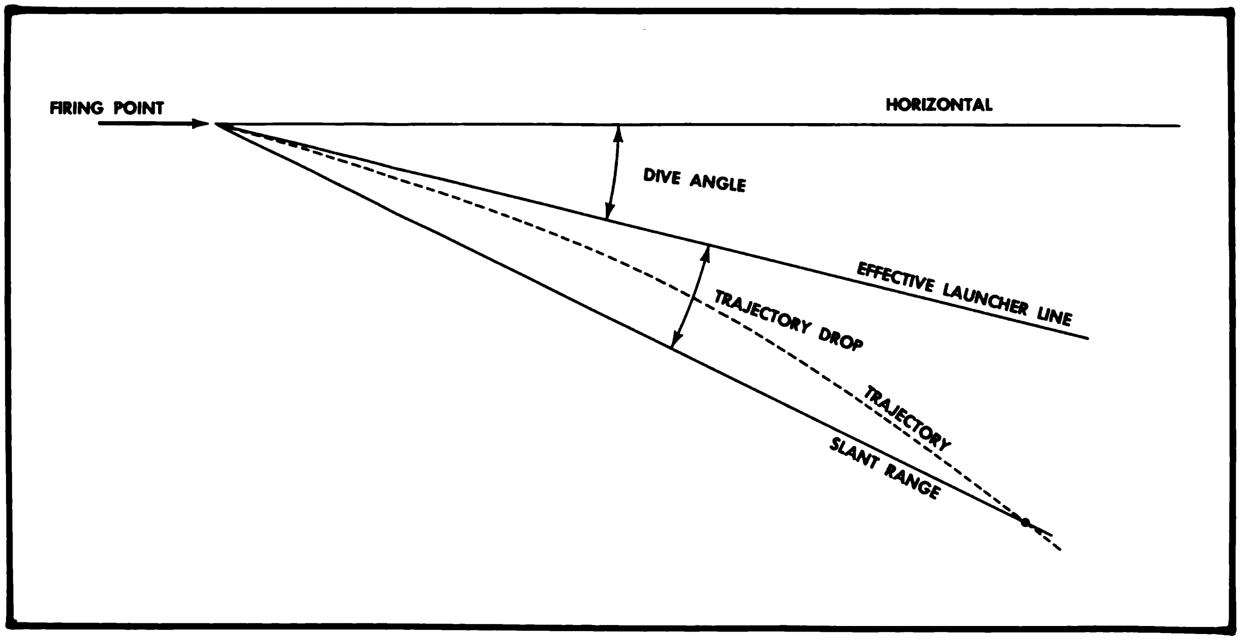

Elements of Rocket Ballistic Tables

2.75-INCH AIRCRAFT ROCKET

The tables which follow are applicable to the 2.75-inch aircraft rocket assembled with 2.75-inch rocket motor Mk. 1 Mods 1, 2, 3 and 4 and 2.75-inch rocket head Mk. 1 and Mods. The trajectories were computed at the Naval Proving Ground, Dahlgren, Virginia on the basis of ballistic information obtained from firing tests conducted at the Naval Ordnance Test Station, Inyokern, California. The following data and assumed standard conditions were used in the computation of these trajectories.

(a) The rocket was considered to have been fired forward into undisturbed air with longitudinal axis of launching tube parallel to the aircraft flight line.

(b) Weight of complete rocket was 18.04 lb.

Elements of Rocket Ballistic Tables

The elements of the tables are defined in the following paragraphs and illustrated in the two pairs of diagrams and charts below.

Slant range, the distance between the position of the rocket at the instant of firing and its position when it intercepts the target, measured along the sight line for rocket fire.

Launcher line, the direction of the longitudinal axis of the rocket when the rocket is mounted in the launching tube.

Effective launching line, the initial direction of flight of the rocket immediately after launching. As shown in the diagram below, this line lies between the launcher line and the flight path, the exact position being governed by the velocity jump.

Aircraft flight line, the path traced by the center of gravity of the launching aircraft.

Dive angle or climb angle, the angle between the effective launching line and the horizontal.

Trajectory drop, the angle between the effective launching line and the slant range line. Trajectory drop is tabulated in milliradians.

Time of flight, the time required for the

[redacted]	[redacted]	[redacted]	[redacted]	[redacted]
0	382	526	671	816
5	473	653	832	1012
10	418	576	734	893
15	365	503	642	780
20	354	488	622	756
25	350	483	616	749
30	350	483	616	749
35	355	490	624	759
40	368	507	647	786
45	386	533	679	826
50	422	582	743	903
55	459	633	807	981
60	497	686	874	1063
65	531	733	934	1136
70	564	778	991	1205
75	570	786	1003	1219
80	557	768	979	1190
85	452	623	795	966
90	268	370	471	573
95	128	176	224	273
100	0	0	0	0

*Burning is assumed to begin 0.03 second after the firing circuit is energized. (This is approximately the mean ignition delay observed in firing tests.)

Thrust in Pounds

Digitized by Google

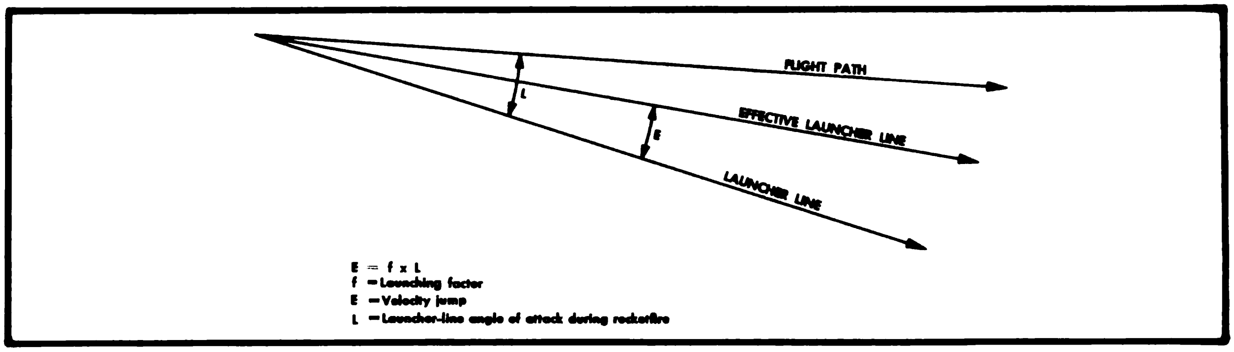

Illustration for Launching Factor Formula

rocket to attain a given slant range from the firing point.

True airspeed, the speed, relative to the air, at which the aircraft is moving along the flight line.

Propellent temperature, the temperature of the rocket propellent at the time of firing.

Launching Factor (labeled f in diagram below).

The launching factor represents the amount the rocket will turn from the direction of launching toward the direction of the aircraft flight line when the launcher line and aircraft flight line are not parallel. It is used in the formula, $E = f \times L$ (see diagram above), to obtain the direction of the effective launching line due to local air disturbances near the launcher are being investigated.

Launcher length, the distance the rocket must travel to clear the launching tube.

Armament datum line, a longitudinal reference line fixed relative to the aircraft by boresight fittings provided for that purpose. This line is used as a reference in boresighting.

Angle of attack of armament datum line, the angle between the armament datum line and the flight line. This angle may be positive or negative depending on the attitude of the aircraft relative to the flight line. It is negative when the armament datum line is below the flight line, *i.e.*, when the aircraft flies nose down in respect to the flight line. The angle of attack varies with airspeed, weight, and dive angle. Also it is affected by accelerations in flight which are not considered here since, for the purposes of this appendix, the sight angle is intended for use only under constant airspeed conditions.

Launcher angle, the angle between the launcher line and the armament datum line.

Zero sight line, the sight line through the pipper of a fixed sight or through the pipper of an adjustable sight set at 0. Gunsights are usually boresighted so that the zero sight line is parallel to the armament datum line.

Line-of-Sight, the line from the eye to the impact point. For a zero sight angle (or with an adjustable sight set to the sight angle) this line will be through the pipper of the sight; otherwise, it will be through a point in the reticle below (or above) the pipper by the amount of the sight angle.

Sight angle, the angle between the zero sight line and the line sight to the impact point at the instant of firing. The sight angle is positive when the zero sight line is above (beyond) the impact point and negative when it is below (short of) the impact point.

Altitude, the height of the aircraft *above the impact point* at the instant of firing.

Allowance for parallax, a correction to sight angle to compensate for the distance that the sight is above the rocket launcher.

Application of Tables

Sight angles are obtained by combining the trajectory data with other factors which depend on the specific aircraft, sight, and launcher. At the instant of rocket firing the aircraft is moving along a straight line at constant airspeed with no roll or yaw.

Air-to-Ground Rocketry

SIGHT ANGLE AND ALTITUDE. The angles which combine to determine the sight angle

Digitized by Google

2.75-INCH AIRCRAFT ROCKET									
LAUNCHING FACTOR									
TRUE AIRSPEED		PROPELLENT TEMPERATURE IN °F.							
KNOTS	M.P.H.	—50	10	70	130	—50	10	70	130
		LAUNCHER LENGTH · 48 INCHES RELATIVE AIR DENSITY							
		.25				.75			
200	230	.710	.657	.618	.585	.776	.727	.690	.657
400	460	.874	.845	.820	.800	.896	.873	.852	.833
600	691	.921	.906	.888	.877	.931	.917	.904	.893
900	1,038	.947	.938	.928	.924	.956	.946	.936	.932
		.50				1.00			
200	230	.752	.702	.663	.632	.791	.746	.707	.677
400	460	.886	.863	.842	.822	.903	.879	.860	.843
600	691	.927	.914	.901	.888	.936	.920	.910	.898
900	1,038	.953	.943	.934	.925	.961	.949	.939	.933

Launching Factor

for firing at surface targets are illustrated in the diagram below. Since the sight is usually some distance above the rocket launcher an allowance for sight parallax, P, (not shown below) must be included to determine the sight angle.

$$P = 1{,}000\frac{U}{R}$$

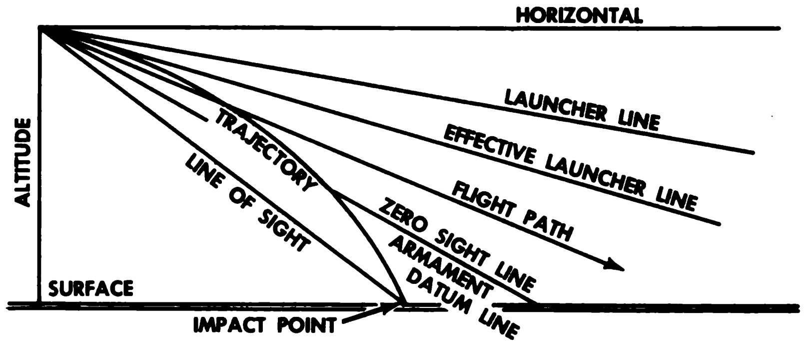

θ . . . The angle between the aircraft flight line and the horizontal.

A . . . Angle of attack of armament datum line. A is negative when the armament datum line is below the flight line.

D . . . Trajectory drop. (Drop of the rocket due to gravity.) D is defined as positive.

L . . . Launcher angle. L is positive when the launcher line is above the armament datum line.

E . . . Sighting allowance for angle of attack of launcher line. $E = f(A+L)$ where f is the launching factor.

S . . . Sight angle $(D+E-L)$. S is positive when the zero sight line is above the line-of-sight.

θ_0 . . Dive angle. $\theta_0 = \theta\ (1-f)\ (A+L)$

R . . . Slant range.

Sight Angle for Rocket Firing
(Zero Sight line Parallel to Armament Datum Line. No Sight Parallax Shown)

Digitized by Google

where U is the average distance in yards that the sight is above the rocket launcher and R is the slant range in yards. P will usually be negligible at the longer ranges.

To obtain the sight angle, S, the angles are combined in this manner.

$$S = D + E - L + P$$

If the zero sight line is not boresighted parallel to the armament datum line the angle introduced must be added to the sight angle. The sign of this angle will be positive when the zero sight line is above the armament datum line.

The formula below yields the altitude of the firing point above the impact point.

$$\text{Altitude} = R \text{ sine } \theta_1$$

$$\theta_1 = \theta_0 + D$$

AIMING ALLOWANCE FOR WIND OR TARGET MOTION Wind is the motion of the air relative to the earth. In computing the aiming allowance for wind the air is assumed to move with the same speed and direction at all altitudes. The effect of wind on aiming is easily visualized by considering the air as a stationary mass and the earth as moving with the velocity of the wind. Thus it is seen that the wind causes the impact point on the earth to move a distance equal to the produce of the wind velocity and the time of flight. Similarly, the target will move a distance equal to its speed times the time of flight.

The aiming allowance for a given wind or target motion expressed as a distance along the surface is constant regardless of the direction of the wind or target motion. The angular aiming allowance in mils, however, depends on the direction of the wind or target motion and on the dive angle. It may be obtained from the following formula.

$$\text{Aiming allowance in mils} = 563Vt \times (1 - \text{cosine}^2\theta_1 \times \text{cosine}^2\theta_2 \times 2) \times \frac{1/2}{R}$$

where V is the speed of the wind or target in knots,

t is the time of flight of the rocket,

θ_2 is the angle in the horizontal plane between the direction of motion of the aircraft and the direction of the wind or target motion,

R is the slant range in yards.

The aiming allowance for wind is always applied *up-wind* and that for target motion is applied *in the direction of target motion.*

EXAMPLE. To illustrate use of the tables, suppose sighting data are desired for attacking a surface target under the following conditions.

Slant range, R	2000 yards
Dive angle, θ_0	30°
True airspeed	400 knots (460 m.p.h.)
Propellent temperature	70° F.
Altitude of target above sea level	2,000 feet
Angle-of-attack, A	−20 mils
Launcher angle, L	30 mils
Launcher length	48 inches
Sight parallax, U	2 yards
Target motion: Speed, V	30 knots (35 m.p.h.)
Direction, θ_2	30°
Wind: Speed, V	20 knots (22 m.p.h.)
Direction, θ_2	60°

SOLUTION.

a. From the table of launching factors, the launching factor, f, is found to be 86

b. From the trajectory tables for 30° dive angle, at relative density 1.00
Trajectory drop . . . . .29 mils
Time of flight . . . . .2.92 seconds

c. Compute E (using formula on page 298), .86 (−20+30) . . . .9 mils

d. Compute P (using formula on page 299), 1,000×2/2,000 . . .1 mil

e. The sight angle, S, =
$D + E - L + P$
$29 + 9 - 30 + 1$ . . . . 9 mils

f. Compute θ_1 (1 mil = .057°)
30° + .057° × 29 . . . . 31.65°
and the altitude of the firing point above the target is found to be
3×2,000 sine 31.65° =
6,000×.5247 . . . . 3,148 feet

Digitized by Google

g. The aiming allowances are:

For target motion,

$$\frac{563\times30\times2.92\ (1-\cos^2 31.65^\circ\times\cos^2 30^\circ)\ ½}{2{,}000}$$

$$=24.15\ (1-0.725\times0.75)\ ½=16 \text{ mils}$$

for wind,

$$\frac{563\times20\times2.86\ (1-\cos^2 31.65^\circ\times\cos^2 60^\circ)\ ½}{2{,}000}$$

$$=16.10\ (1-0.725\times0.25)\ ½=15 \text{ mils}$$

Under the given conditions, then, the sight angle is +9 mils and the aiming point is 16 mils ahead of the target and 15 mils upwind.

Air-to-Air Rocketry

SIGHT ANGLE AND AIMING ALLOWANCE FOR TARGET MOTION. The sight angle for firing at aircraft targets is obtained in the same manner as that for surface targets. However, in this case the present slant range, as shown in the diagram below, may differ appreciably from the slant range to impact with which the trajectory tables must be entered.

The aiming allowance required for target motion is illustration below. Aiming for aircraft targets is not affected by wind as long as the air mass moves with the same speed and direction at all points within the region involved.

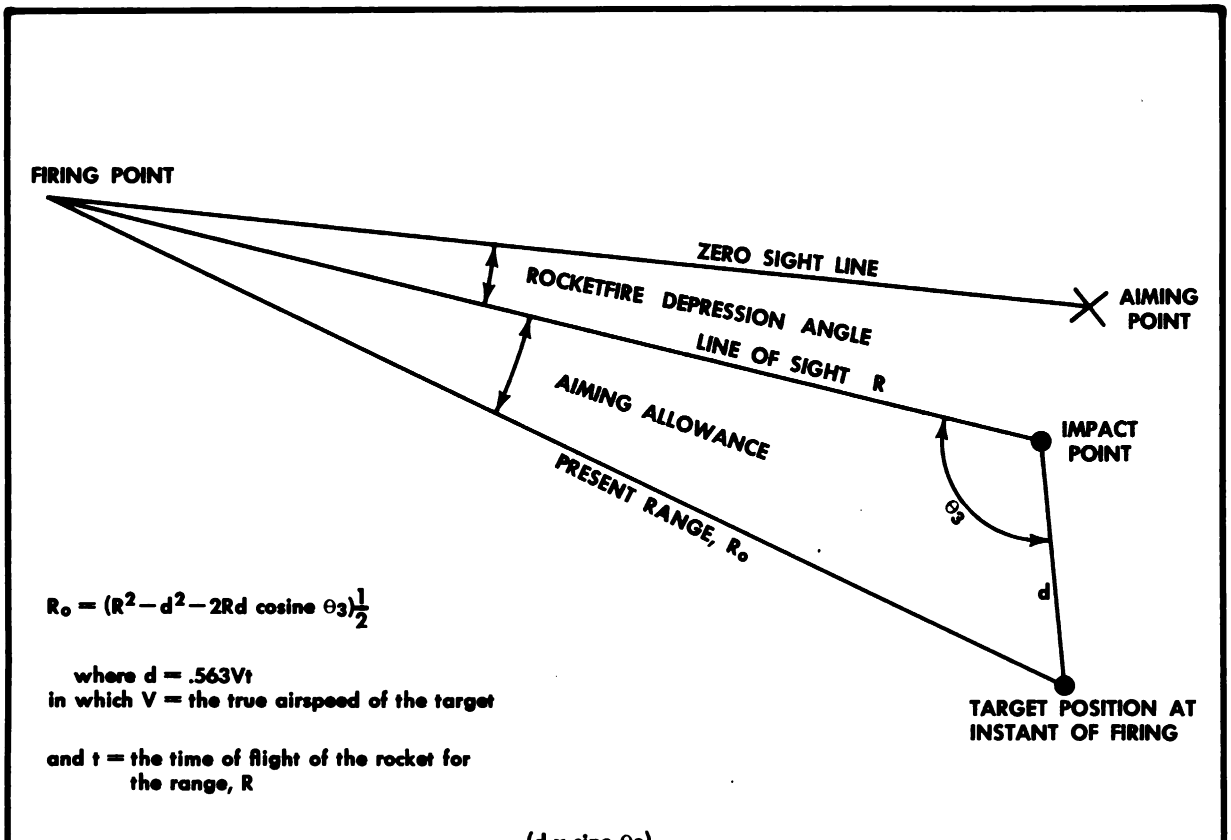

$R_o = (R^2 - d^2 - 2Rd \text{ cosine } \theta_3)^{\frac{1}{2}}$

where $d = .563Vt$

in which V = the true airspeed of the target

and t = the time of flight of the rocket for the range, R

The aiming allowance in mils $= 1{,}000 \times \text{sine}^{-1}\dfrac{(d \times \text{sine } \theta_3)}{R_o}$

Range and Aiming Allowance in Air to Air Rocketry
(Assuming the roll and yaw angles to be zero at firing and the target to move along a straight line at constant speed.)

Digitized by Google

2.75-INCH AIRCRAFT ROCKET

DIVE ANGLE = 0°

RELATIVE AIR DENSITY = 1.0

SLANT RANGE IN YARDS	TIME OF FLIGHT IN SECONDS								TRAJECTORY DROP IN MILS						
	TRUE AIRSPEED														
	0	230 m.p.h. 200 knots	288 m.p.h. 250 knots	346 m.p.h. 300 knots	403 m.p.h. 350 knots	461 m.p.h. 400 knots	518 m.p.h. 450 knots	576 m.p.h. 500 knots	230 m.p.h. 200 knots	288 m.p.h. 250 knots	346 m.p.h. 300 knots	403 m.p.h. 350 knots	461 m.p.h. 400 knots	518 m.p.h. 450 knots	576 m.p.h. 500 knots
	PROPELLENT TEMPERATURE 10° F.														
200	1.115	.833	.777	.726	.680	.638	.601	.567	26	21	18	14	12	10	9
400	1.543	1.276	1.215	1.158	1.104	1.054	1.007	.962	35	30	26	22	19	17	15
600	1.849	1.602	1.544	1.489	1.435	1.384	1.335	1.287	41	36	31	27	24	21	19
800	2.116	1.864	1.809	1.756	1.704	1.654	1.606	1.559	45	39	35	30	27	24	22
1,000	2.391	2.105	2.046	1.990	1.937	1.886	1.838	1.791	48	42	38	33	30	27	25
1,200	2.686	2.353	2.285	2.221	2.162	2.106	2.054	2.004	50	44	40	35	32	29	27
1,400	2.999	2.618	2.539	2.466	2.398	2.334	2.274	2.218	53	47	42	38	34	31	29
1,600	3.333	2.898	2.809	2.725	2.648	2.575	2.507	2.444	55	49	44	40	36	33	30
1,800	3.690	3.196	3.095	3.001	2.913	2.831	2.754	2.682	57	51	46	42	38	35	32
2,000	4.072	3.514	3.400	3.294	3.195	3.102	3.015	2.934	60	54	49	44	40	37	34
2,200	4.481	3.853	3.725	3.606	3.494	3.390	3.293	3.201	62	56	51	46	42	39	36
2,400	4.918	4.216	4.072	3.938	3.813	3.696	3.587	3.485	65	59	53	48	44	41	38
2,600	5.385	4.604	4.443	4.293	4.154	4.023	3.901	3.787	67	61	55	50	46	42	39
2,800	5.881	5.019	4.840	4.673	4.518	4.372	4.236	4.109	70	63	57	52	48	44	41
3,000	6.405	5.460	5.763	5.079	4.907	4.746	4.595	4.453	73	66	60	54	50	46	43
3,200	6.953	5.973	5.710	5.510	5.322	5.145	4.978	4.821	77	70	63	58	53	49	45
3,400	7.522	6.416	6.188	5.971	5.767	5.573	5.390	5.216	81	73	67	61	56	52	48
3,600	8.110	6.938	6.694	6.462	6.241	6.030	5.829	5.639	85	77	70	64	59	54	50
3,800	8.714	7.485	7.229	6.982	6.745	6.517	6.299	6.090	89	81	74	67	62	57	53
4,000	9.335	8.054	7.787	7.528	7.277	7.033	6.798	6.571	94	86	78	72	66	61	56

Time of Flight and Trajectory Drop for 2.75-Inch Aircraft Rocket at Propellent Temperature of 10°F-Dive Angle 0°

Digitized by Google

2.75-INCH AIRCRAFT ROCKET

DIVE ANGLE = 0° **RELATIVE AIR DENSITY = 1.0**

SLANT RANGE IN YARDS	TIME OF FLIGHT IN SECONDS								TRAJECTORY DROP IN MILS						
	TRUE AIRSPEED														
	0	230 m.p.h. 200 knots	288 m.p.h. 250 knots	346 m.p.h. 300 knots	403 m.p.h. 350 knots	461 m.p.h. 400 knots	518 m.p.h. 450 knots	576 m.p.h. 500 knots	230 m.p.h. 200 knots	288 m.p.h. 250 knots	346 m.p.h. 300 knots	403 m.p.h. 350 knots	461 m.p.h. 400 knots	518 m.p.h. 450 knots	576 m.p.h. 500 knots
	PROPELLENT TEMPERATURE 70° F.														
200	.989	.767	.720	.678	.639	.603	.571	.541	23	19	16	13	11	9	8
400	1.354	1.153	1.106	1.061	1.018	.977	.938	.901	30	26	22	19	17	15	13
600	1.627	1.429	1.385	1.342	1.301	1.261	1.222	1.185	35	31	27	24	21	19	17
800	1.883	1.662	1.616	1.573	1.531	1.491	1.453	1.415	38	33	29	26	23	21	19
1,000	2.161	1.898	1.844	1.793	1.746	1.701	1.659	1.619	40	36	32	29	26	24	21
1,200	2.455	2.150	2.086	2.026	1.970	1.918	1.869	1.823	42	37	33	30	27	25	23
1,400	2.770	2.415	2.342	2.274	2.209	2.149	2.092	2.039	44	39	35	32	29	26	24
1,600	3.105	2.698	2.614	2.535	2.461	2.392	2.327	2.266	46	41	37	34	31	28	26
1,800	3.463	2.998	2.902	2.812	2.728	2.649	2.575	2.505	48	43	39	35	32	29	27
2,000	3.847	3.318	3.209	3.107	3.012	2.922	2.838	2.759	50	45	41	37	34	31	29
2,200	4.257	3.660	3.537	3.422	3.314	3.213	3.118	3.029	53	48	43	39	36	33	31
2,400	4.696	4.025	3.886	3.756	3.635	3.521	3.414	3.314	55	50	45	41	38	35	32
2,600	5.164	4.416	4.261	4.115	3.979	3.851	3.731	3.618	58	53	48	44	40	37	34
2,800	5.662	4.834	4.661	4.498	4.346	4.203	4.069	3.943	61	55	50	46	42	39	36
3,000	6.188	5.281	5.088	4.908	4.738	4.579	4.430	4.290	64	58	53	48	44	41	38
3,200	6.739	5.757	5.545	5.346	5.159	4.982	4.816	4.660	67	61	56	51	47	43	40
3,400	7.311	6.264	6.032	5.814	5.608	5.413	5.230	5.057	71	65	59	54	50	46	43
3,600	7.901	6.798	6.548	6.311	6.087	5.874	5.672	5.482	76	69	63	58	53	49	46
3,800	8.509	7.356	7.090	6.837	6.595	6.364	6.144	5.936	80	73	66	61	56	52	48
4,000	9.134	7.934	7.657	7.389	7.132	6.884	6.647	6.419	85	78	71	65	60	55	52

Time of Flight and Trajectory Drop for 2.75-Inch Aircraft Rocket at Propellent Temperature of 70°F-Dive Angle 0°

Digitized by Google

2.75-INCH AIRCRAFT ROCKET

DIVE ANGLE = 0°

RELATIVE AIR DENSITY = 1.0

SLANT RANGE IN YARDS	TIME OF FLIGHT IN SECONDS								TRAJECTORY DROP IN MILS						
	TRUE AIRSPEED														
	0	230 m.p.h. 200 knots	288 m.p.h. 250 knots	346 m.p.h. 300 knots	403 m.p.h. 350 knots	461 m.p.h. 400 knots	518 m.p.h. 450 knots	576 m.p.h. 500 knots	230 m.p.h. 200 knots	288 m.p.h. 250 knots	346 m.p.h. 300 knots	403 m.p.h. 350 knots	461 m.p.h. 400 knots	518 m.p.h. 450 knots	576 m.p.h. 500 knots
	PROPELLENT TEMPERATURE 130° F														
200	.897	.715	.676	.640	.606	.575	.546	.520	20	17	14	12	10	9	7
400	1.219	1.058	1.020	.983	.948	.914	.882	.850	27	23	20	17	15	13	12
600	1.469	1.301	1.265	1.230	1.197	1.164	1.132	1.101	30	26	23	20	18	16	15
800	1.728	1.525	1.483	1.444	1.406	1.371	1.338	1.306	33	29	26	23	21	19	17
1,000	2.003	1.761	1.710	1.662	1.618	1.576	1.537	1.500	35	31	27	24	22	20	18
1,200	2.295	2.010	1.951	1.895	1.842	1.793	1.747	1.703	36	32	29	26	24	22	20
1,400	2.606	2.274	2.204	2.139	2.078	2.021	1.967	1.917	38	34	31	28	26	24	22
1,600	2.938	2.554	2.475	2.400	2.330	2.264	2.202	2.143	40	36	33	30	27	25	23
1,800	3.293	2.853	2.761	2.675	2.595	2.519	2.448	2.381	42	38	35	32	29	27	24
2,000	3.672	3.170	3.066	2.968	2.876	2.790	2.709	2.633	44	40	36	33	30	28	26
2,200	4.077	3.510	3.391	3.280	3.176	3.078	2.986	2.901	46	42	38	35	32	30	27
2,400	4.511	3.872	3.738	3.613	3.496	3.385	3.281	3.184	49	45	41	37	34	31	29
2,600	4.975	4.260	4.109	3.968	3.836	3.712	3.596	3.487	51	47	43	39	36	33	31
2,800	5.468	4.674	4.506	4.348	4.200	4.061	3.931	3.808	54	49	45	41	38	35	33
3,000	5.991	5.118	4.930	4.754	4.589	4.434	4.289	4.152	57	52	47	43	40	37	34
3,200	6.538	5.591	5.384	5.189	5.006	4.834	4.672	4.520	61	56	51	47	43	40	37
3,400	7.106	6.094	5.868	5.654	5.453	5.262	5.083	4.914	65	59	54	49	45	42	39
3,600	7.694	6.625	6.380	6.147	5.927	5.718	5.521	5.334	69	63	57	52	48	44	41
3,800	8.300	7.180	6.919	6.669	6.432	6.205	5.989	5.785	73	67	61	56	52	48	45
4,000	8.923	7.757	7.483	7.219	6.966	6.722	6.489	6.265	78	71	65	60	55	51	48

Time of Flight and Trajectory Drop for 2.75-Inch Aircraft Rocket at Propellent Temperature of 130°F-Dive Angle 0°

Digitized by Google

2.75-INCH AIRCRAFT ROCKET

DIVE ANGLE = 10° **RELATIVE AIR DENSITY = 1.0**

SLANT RANGE IN YARDS	TIME OF FLIGHT IN SECONDS								TRAJECTORY DROP IN MILS						
	TRUE AIRSPEED														
	0	230 m.p.h. 200 knots	288 m.p.h. 250 knots	346 m.p.h. 300 knots	403 m.p.h. 350 knots	461 m.p.h. 400 knots	518 m.p.h. 450 knots	576 m.p.h. 500 knots	230 m.p.h. 200 knots	288 m.p.h. 250 knots	346 m.p.h. 300 knots	403 m.p.h. 350 knots	461 m.p.h. 400 knots	518 m.p.h. 450 knots	576 m.p.h. 500 knots
	PROPELLENT TEMPERATURE 10° F.														
200	.831	.776	.725	.679	.637	6.00	.566	.536	25	21	18	14	12	10	9
400	1.273	1.213	1.156	1.102	1.052	1.005	.961	.920	34	29	25	22	19	16	14
600	1.599	1.541	1.486	1.433	1.382	1.333	1.285	1.240	40	35	30	26	23	21	19
800	1.861	1.806	1.753	1.702	1.652	1.604	1.557	1.511	44	38	34	29	26	24	22
1,000	2.101	2.043	1.987	1.934	1.884	1.836	1.789	1.744	47	41	37	32	29	26	24
1,200	2.349	2.281	2.218	2.159	2.103	2.051	2.001	1.955	49	43	39	34	31	28	26
1,400	2.613	2.534	2.462	2.394	2.330	2.271	2.215	2.163	52	36	41	37	33	30	28
1,600	2.893	2.804	2.721	2.644	2.571	2.504	2.441	2.381	53	48	43	39	35	32	29
1,800	3.190	3.090	2.996	2.909	2.827	2.751	2.679	2.612	56	50	45	41	37	34	31
2,000	3.509	3.395	3.290	3.191	3.099	3.012	2.932	2.856	58	52	48	43	39	36	33
2,200	3.848	3.721	3.602	3.491	3.388	3.291	3.200	3.115	60	54	49	45	41	38	35
2,400	4.212	4.069	3.936	3.812	3.695	3.587	3.485	3.389	63	57	51	47	43	40	37
2,600	4.602	4.442	4.293	4.154	4.024	3.902	3.789	3.682	65	60	54	49	45	41	38
2,800	5.019	4.841	4.676	4.521	4.376	4.240	4.114	3.994	68	62	56	51	47	43	40
3,000	5.464	5.268	5.085	4.914	4.754	4.603	4.462	4.329	71	64	59	53	49	45	42
3,200	5.933	5.721	5.521	5.334	5.157	4.991	4.834	4.687	75	68	62	57	52	48	44
3,400	6.432	6.205	5.988	5.785	5.591	5.409	5.235	4.071	79	71	65	59	55	51	47
3,600	6.959	6.716	6.485	6.265	6.055	5.855	5.665	5.484	83	75	68	62	58	53	49
3,800	7.509	7.256	7.010	6.776	6.549	6.333	6.125	5.926	87	79	72	65	61	56	52
4,000	8.081	7.817	7.561	7.313	7.072	6.839	6.614	6.398	92	84	76	70	64	60	55

Time of Flight and Trajectory Drop for 2.75-Inch Aircraft Rocket at Propellent Temperature of 10°F-Dive Angle 10°

Digitized by Google

2.75-INCH AIRCRAFT ROCKET

DIVE ANGLE = 10°

RELATIVE AIR DENSITY = 1.0

SLANT RANGE IN YARDS	TIME OF FLIGHT IN SECONDS								TRAJECTORY DROP IN MILS						
	TRUE AIRSPEED														
	0	230 m.p.h. 200 knots	288 m.p.h. 250 knots	346 m.p.h. 300 knots	403 m.p.h. 350 knots	461 m.p.h. 400 knots	518 m.p.h. 450 knots	576 m.p.h. 500 knots	230 m.p.h. 200 knots	288 m.p.h. 250 knots	346 m.p.h. 300 knots	403 m.p.h. 350 knots	461 m.p.h. 400 knots	518 m.p.h. 450 knots	576 m.p.h. 500 knots
	PROPELLENT TEMPERATURE 70° F.														
200		.766	.719	.677	.638	.603	.571	.541	22	19	16	13	11	9	8
400		1.151	1.104	1.060	1.017	.976	.937	.900	29	25	22	19	16	14	13
600		1.427	1.383	1.341	1.300	1.260	1.221	1.184	34	30	26	23	21	19	17
800		1.660	1.614	1.571	1.529	1.489	1.451	1.414	37	32	28	25	23	21	19
1,000		1.895	1.841	1.791	1.744	1.699	1.657	1.617	39	35	31	28	25	23	21
1,200		2.146	2.083	2.023	1.968	1.916	1.867	1.821	41	36	32	29	26	24	22
1,400		2.411	2.338	2.271	2.207	2.147	2.090	2.037	43	38	34	31	28	26	24
1,600		2.694	2.610	2.532	2.458	2.389	2.325	2.264	45	40	36	33	30	27	25
1,800		2.994	2.898	2.809	2.726	2.647	2.573	2.504	47	42	38	35	31	29	26
2,000		3.314	3.206	3.104	3.010	2.920	2.837	2.758	49	44	40	36	33	31	29
2,200		3.657	3.535	3.421	3.313	3.212	3.118	3.029	52	47	42	38	35	33	30
2,400		4.024	3.886	3.756	3.636	3.522	3.415	3.316	54	49	44	40	37	34	31
2,600		4.416	4.262	4.117	3.982	3.854	3.734	3.622	57	51	47	43	39	36	33
2,800		4.837	4.665	4.503	4.352	4.210	4.076	3.950	59	54	49	45	41	38	35
3,000		5.287	5.096	4.917	4.748	4.590	4.441	4.301	62	57	52	47	43	40	37
3,200		5.767	5.557	5.360	5.174	4.998	4.832	4.676	65	60	55	50	46	42	39
3,400		6.277	6.049	5.833	5.629	5.435	5.253	5.080	69	63	58	53	49	45	42
3,600		6.814	6.569	6.336	6.114	5.903	5.702	5.513	74	67	61	57	52	48	45
3,800		7.373	7.114	6.866	6.628	6.400	6.183	5.975	78	71	65	60	55	51	47
4,000		7.952	7.683	7.422	7.171	6.927	6.693	6.468	83	76	69	63	59	54	51

Time of Flight and Trajectory Drop for 2.75-Inch Aircraft Rocket at Propellent Temperature of 70°F-Dive Angle 10°

Digitized by Google

2.75-INCH AIRCRAFT ROCKET

DIVE ANGLE = 10° **RELATIVE AIR DENSITY = 1.0**

	TIME OF FLIGHT IN SECONDS								TRAJECTORY DROP IN MILS						
SLANT RANGE IN YARDS	TRUE AIRSPEED														
	0	230 m.p.h. 200 knots	288 m.p.h. 250 knots	346 m.p.h. 300 knots	403 m.p.h. 350 knots	461 m.p.h. 400 knots	518 m.p.h. 450 knots	576 m.p.h. 500 knots	230 m.p.h. 200 knots	288 m.p.h. 250 knots	346 m.p.h. 300 knots	403 m.p.h. 350 knots	461 m.p.h. 400 knots	518 m.p.h. 450 knots	576 m.p.h. 500 knots
	PROPELLENT TEMPERATURE 130° F.														
200		.714	.675	.639	.605	.574	.546	.519	20	17	14	12	10	9	7
400		1.057	1.019	.982	.947	.913	.881	.850	26	23	20	17	15	13	12
600		1.300	1.264	1.229	1.196	1.163	1.131	1.100	30	26	23	20	18	16	15
800		1.523	1.481	1.442	1.405	1.370	1.337	1.305	32	28	25	23	21	19	17
1,000		1.759	1.708	1.660	1.616	1.574	1.535	1.498	34	30	26	24	22	20	18
1,200		2.007	1.948	1.893	1.840	1.791	1.745	1.701	35	31	28	25	23	21	20
1,400		2.271	2.202	2.137	2.076	2.019	1.966	1.916	37	34	30	27	25	23	22
1,600		2.551	2.472	2.397	2.327	2.262	2.200	2.141	39	35	32	29	28	26	23
1,800		2.850	2.758	2.673	2.593	2.518	2.447	2.380	41	37	34	31	28	26	23
2,000		3.167	3.064	2.967	2.875	2.789	2.709	2.633	43	39	35	32	29	27	25
2,200		3.508	3.390	3.280	2.176	3.079	2.987	2.902	45	41	37	34	31	29	26
2,400		3.872	3.739	3.615	3.498	3.388	3.284	3.187	48	44	40	36	33	30	29
2,600		4.262	4.112	3.972	3.841	3.717	3.601	3.492	50	46	42	38	35	33	30
2,800		4.679	4.513	4.355	4.208	4.070	3.939	3.817	53	48	44	40	37	34	32
3,000		5.126	4.940	4.766	4.602	4.447	4.302	4.165	56	51	46	42	39	36	33
3,200		5.604	5.399	5.206	5.024	4.853	4.691	4.538	60	55	50	46	42	39	36
3,400		6.111	5.888	5.676	5.477	5.287	5.108	4.939	63	58	53	48	44	41	38
3,600		6.645	6.405	6.175	5.958	5.751	5.554	5.368	68	62	56	51	47	44	40
3,800		7.202	6.948	6.703	6.469	6.245	6.031	5.827	71	65	60	55	51	47	44
4,000		7.779	7.514	7.257	7.009	6.769	6.539	6.317	76	69	63	59	54	50	47

Time of Flight and Trajectory Drop for 2.75-Inch Aircraft Rocket at Propellent Temperature of 130°F-Dive Angle 10°

Digitized by Google

2.75-INCH AIRCRAFT ROCKET

DIVE ANGLE = 20°

RELATIVE AIR DENSITY = 1.0

SLANT RANGE IN YARDS	TIME OF FLIGHT IN SECONDS								TRAJECTORY DROP IN MILS						
	TRUE AIRSPEED														
	0	230 m.p.h. 200 knots	288 m.p.h. 250 knots	346 m.p.h. 300 knots	403 m.p.h. 350 knots	461 m.p.h. 400 knots	518 m.p.h. 450 knots	576 m.p.h. 500 knots	230 m.p.h. 200 knots	288 m.p.h. 250 knots	346 m.p.h. 300 knots	403 m.p.h. 350 knots	461 m.p.h. 400 knots	518 m.p.h. 450 knots	576 m.p.h. 500 knots
	PROPELLENT TEMPERATURE 10° F.														
200		.830	.774	.724	.678	.637	.600	.566	24	20	17	14	12	10	9
400		1.271	1.211	1.154	1.101	1.051	1.004	.959	33	28	24	21	17	15	13
600		1.596	1.538	1.484	1.430	1.379	1.330	1.284	38	33	29	25	22	20	17
800		1.858	1.803	1.751	1.699	1.649	1.601	1.555	41	36	32	28	25	23	21
1,000		2.098	2.040	1.985	1.932	1.881	1.833	1.787	45	39	34	30	27	25	23
1,200		2.345	2.277	2.215	2.156	2.100	2.048	1.999	46	40	36	33	29	27	25
1,400		2.608	2.530	2.458	2.390	2.327	2.268	2.212	49	44	39	35	32	28	26
1,600		2.888	2.799	2.717	2.640	2.568	2.501	2.438	50	46	41	37	34	31	28
1,800		3.185	3.085	2.992	2.905	2.824	2.748	2.677	52	47	43	38	35	32	29
2,000		3.504	3.391	3.286	3.188	3.096	3.009	2.927	55	49	45	41	37	34	32
2,200		3.843	3.717	3.599	3.488	3.385	3.289	3.198	57	51	46	42	38	35	33
2,400		4.208	4.066	3.934	3.810	3.695	3.586	3.485	59	54	48	44	40	37	35
2,600		4.600	4.441	4.293	4.155	4.025	3.904	3.790	62	57	51	47	43	39	36
2,800		5.019	4.843	4.678	4.525	4.380	4.245	4.119	64	59	53	49	45	41	38
3,000		5.467	5.273	5.091	4.921	4.761	4.611	4.470	68	61	56	51	47	43	40
3,200		5.944	5.732	5.533	5.346	5.170	5.003	4.847	71	64	59	54	49	46	42
3,400		6.450	6.222	6.006	5.802	5.609	5.426	5.254	74	67	61	56	51	48	45
3,600		6.982	6.739	6.509	6.288	6.079	5.879	5.690	79	71	64	59	55	50	47
3,800		7.537	7.283	7.038	6.805	6.579	6.364	6.158	82	74	69	62	58	53	50
4,000		8.110	7.847	7.593	7.346	7.107	6.877	6.654	87	80	72	67	61	57	53

Time of Flight and Trajectory Drop for 2.75-Inch Aircraft Rocket at Propellent Temperature of 10°F-Dive Angle 20°

Digitized by Google

2.75-INCH AIRCRAFT ROCKET

DIVE ANGLE = 20°

RELATIVE AIR DENSITY = 1.0

SLANT RANGE IN YARDS	TIME OF FLIGHT IN SECONDS								TRAJECTORY DROP IN MILS						
	TRUE AIRSPEED														
	0	230 m.p.h. 200 knots	288 m.p.h. 250 knots	346 m.p.h. 300 knots	403 m.p.h. 350 knots	461 m.p.h. 400 knots	518 m.p.h. 450 knots	576 m.p.h. 500 knots	230 m.p.h. 200 knots	288 m.p.h. 250 knots	346 m.p.h. 300 knots	403 m.p.h. 350 knots	461 m.p.h. 400 knots	518 m.p.h. 450 knots	576 m.p.h. 500 knots
	PROPELLENT TEMPERATURE 70° F.														
200		.764	.718	.677	.638	.602	.570	.540	21	18	15	13	11	9	8
400		1.150	1.103	1.058	1.016	.975	.936	.900	27	23	21	17	15	13	12
600		1.425	1.382	1.339	1.298	1.258	1.220	1.182	32	29	25	22	20	18	16
800		1.658	1.613	1.569	1.528	1.488	1.450	1.412	35	31	27	24	22	20	17
1,000		1.892	1.838	1.788	1.741	1.697	1.655	1.616	37	33	29	26	24	22	19
1,200		2.143	2.080	2.071	1.966	1.914	1.865	1.820	39	35	31	27	25	23	21
1,400		2.407	2.335	2.268	2.704	2.144	2.088	2.035	40	35	33	29	27	25	23
1,600		2.690	2.606	2.528	2.455	2.387	2.322	2.261	43	38	35	32	28	26	24
1,800		2.990	2.895	2.806	2.723	2.645	2.572	2.502	43	40	37	33	30	28	25
2,000		3.311	3.203	3.102	3.008	2.918	2.835	2.757	47	42	38	35	32	29	27
2,200		3.654	3.533	3.419	3.312	3.212	3.117	3.028	49	45	40	37	34	31	28
2,400		4.022	3.885	3.757	3.636	3.523	3.417	3.317	51	46	41	38	35	32	29
2,600		4.417	4.263	4.119	3.984	3.857	3.738	3.625	54	48	44	41	37	35	32
2,800		4.840	4.669	4.509	4.358	4.216	4.083	3.957	56	51	47	43	39	36	34
3,000		5.293	5.104	4.926	4.758	4.600	4.452	4.312	59	53	49	45	41	38	36
3,200		5.777	5.569	5.373	5.188	5.013	4.848	4.692	62	57	51	47	44	40	37
3,400		6.290	6.065	5.851	5.649	5.456	5.275	5.102	66	60	55	50	46	43	39
3,600		6.829	6.588	6.359	6.139	5.930	5.731	5.542	70	63	58	54	49	46	43
3,800		7.389	7.136	6.894	6.660	6.435	6.219	6.013	74	68	52	57	52	48	45
4,000		7.967	7.705	7.451	7.206	6.966	6.736	6.514	79	72	66	60	56	51	48

Time of Flight and Trajectory Drop for 2.75-Inch Aircraft Rocket at Propellent Temperature of 70°F-Dive Angle 20°

Digitized by Google

2.75-INCH AIRCRAFT ROCKET

DIVE ANGLE = 20° RELATIVE AIR DENSITY = 1.0

SLANT RANGE IN YARDS	TIME OF FLIGHT IN SECONDS								TRAJECTORY DROP IN MILS						
	TRUE AIRSPEED														
	0	230 m.p.h. 200 knots	288 m.p.h. 250 knots	346 m.p.h. 300 knots	403 m.p.h. 350 knots	461 m.p.h. 400 knots	518 m.p.h. 450 knots	576 m.p.h. 500 knots	230 m.p.h. 200 knots	288 m.p.h. 250 knots	346 m.p.h. 300 knots	403 m.p.h. 350 knots	461 m.p.h. 400 knots	518 m.p.h. 450 knots	576 m.p.h. 500 knots
	PROPELLENT TEMPERATURE 130° F.														
200		.714	.675	.638	.605	.574	.545	.519	18	16	13	12	10	9	7
400		1.055	1.018	.981	.947	.913	.881	.849	25	22	19	16	14	12	11
600		1.298	1.263	1.228	1.195	1.162	1.130	1.099	28	25	22	19	17	15	14
800		1.521	1.480	1.441	1.403	1.368	1.335	1.303	30	26	24	22	20	17	16
1,000		1.756	1.706	1.659	1.614	1.573	1.534	1.497	32	28	25	23	21	18	17
1,200		2.004	1.946	1.890	1.838	1.789	1.734	1.700	34	29	27	24	22	20	18
1,400		2.268	2.199	2.135	2.075	2.018	1.964	1.914	36	32	29	26	24	22	21
1,600		2.548	2.469	2.395	2.325	2.259	2.198	2.140	37	34	31	27	25	23	22
1,800		2.847	2.756	2.670	2.591	2.516	2.445	2.379	39	35	32	29	26	24	22
2,000		3.165	3.062	2.965	2.873	2.788	2.708	2.632	41	37	34	31	28	26	24
2,200		3.506	3.389	3.280	3.176	3.079	2.988	2.902	43	38	35	32	29	27	25
2,400		3.872	3.739	3.616	3.499	3.389	3.286	3.190	46	42	38	35	32	29	27
2,600		4.264	4.115	3.976	3.845	3.721	3.605	3.497	48	44	40	37	34	31	28
2,800		4.684	4.519	4.362	4.215	4.077	3.947	3.825	50	46	42	38	35	33	31
3,000		5.134	4.950	4.776	4.613	4.459	4.314	4.178	53	48	43	40	37	35	32
3,200		5.616	5.413	5.221	5.040	4.870	4.708	4.556	57	52	48	44	40	37	35
3,400		6.126	5.906	5.696	5.498	5.309	5.132	4.962	60	55	50	46	42	39	37
3,600		6.663	6.427	6.201	5.987	5.781	5.586	5.400	64	59	53	49	45	42	39
3,800		7.221	6.973	6.733	6.503	6.282	6.070	5.867	68	62	57	53	49	45	42
4,000		7.798	7.540	7.290	7.047	6.812	6.584	6.584	73	66	60	56	52	47	44

Time of Flight and Trajectory Drop for 2.75-Inch Aircraft Rocket at Propellent Temperature of 130°F-Dive Angle 20°

Digitized by Google

2.75-INCH AIRCRAFT ROCKET

DIVE ANGLE = 30° **RELATIVE AIR DENSITY = 1.0**

SLANT RANGE IN YARDS	TIME OF FLIGHT IN SECONDS								TRAJECTORY DROP IN MILS						
	TRUE AIRSPEED														
	0	230 m.p.h. 200 knots	288 m.p.h. 250 knots	346 m.p.h. 300 knots	403 m.p.h. 350 knots	461 m.p.h. 400 knots	518 m.p.h. 450 knots	576 m.p.h. 500 knots	230 m.p.h. 200 knots	288 m.p.h. 250 knots	346 m.p.h. 300 knots	403 m.p.h. 350 knots	461 m.p.h. 400 knots	518 m.p.h. 450 knots	576 m.p.h. 500 knots
	PROPELLENT TEMPERATURE 10° F.														
200		.828	.773	.723	.677	.636	.599	.565	22	19	16	13	11	9	8
400		1.269	1.209	1.152	1.099	1.049	1.002	.958	30	26	22	19	16	14	12
600		1.593	1.536	1.481	1.428	1.377	1.328	1.282	35	30	26	23	20	18	16
800		1.855	1.800	1.748	1.697	1.647	1.599	1.553	38	33	29	26	23	21	19
1,000		2.095	2.037	1.982	1.929	1.879	1.831	1.785	41	36	31	28	25	23	21
1,200		2.341	2.274	2.212	2.153	2.098	2.046	1.997	42	37	33	30	27	25	23
1,400		2.604	2.526	2.454	2.387	2.324	2.265	2.210	45	40	36	32	29	26	24
1,600		2.883	2.795	2.713	2.637	2.564	2.498	2.435	46	42	38	34	31	28	26
1,800		3.180	3.081	2.988	2.902	2.821	2.745	2.674	48	43	39	35	32	29	27
2,000		3.499	3.387	3.282	3.185	3.093	3.007	2.927	50	45	41	37	34	31	29
2,200		3.839	3.713	3.596	3.486	3.383	3.287	3.197	52	47	42	38	35	32	30
2,400		4.205	4.064	3.937	3.809	3.694	3.586	3.485	54	40	44	40	37	34	32
2,600		4.598	4.440	4.293	4.155	4.026	3.905	3.792	57	52	47	43	39	36	33
2,800		5.019	4.844	4.681	4.528	4.384	4.249	4.123	59	54	49	45	41	38	35
3,000		5.471	5.278	5.097	4.928	4.768	4.618	4.478	62	56	51	47	43	40	37
3,200		5.954	5.743	5.544	5.357	5.181	5.015	4.859	65	59	54	49	45	42	39
3,400		6.467	6.238	6.022	5.818	5.625	5.443	5.271	68	61	56	51	47	44	41
3,600		7.004	6.761	6.530	6.310	6.101	5.902	5.713	72	65	59	54	50	46	43
3,800		7.567	7.308	7.064	6.831	6.607	6.393	6.188	75	68	63	57	53	49	46
4,000		8.138	7.875	7.621	7.376	7.139	6.911	6.691	80	73	66	61	56	52	49

Time of Flight and Trajectory Drop for 2.75-Inch Aircraft Rocket at Propellent Temperature of 10°F-Dive Angle 30°

Digitized by Google

2.75-INCH AIRCRAFT ROCKET

DIVE ANGLE = 30°

RELATIVE AIR DENSITY = 1.0

SLANT RANGE IN YARDS	TIME OF FLIGHT IN SECONDS								TRAJECTORY DROP IN MILS						
	TRUE AIRSPEED														
	0	230 m.p.h. 200 knots	288 m.p.h. 250 knots	346 m.p.h. 300 knots	403 m.p.h. 350 knots	461 m.p.h. 400 knots	518 m.p.h. 450 knots	576 m.p.h. 500 knots	230 m.p.h. 200 knots	288 m.p.h. 250 knots	346 m.p.h. 300 knots	403 m.p.h. 350 knots	461 m.p.h. 400 knots	518 m.p.h. 450 knots	576 m.p.h. 500 knots
	PROPELLENT TEMPERATURE 70° F.														
200		.763	.717	.676	.637	.602	.570	.540	19	16	14	12	10	9	8
400		1.148	1.101	1.057	1.015	.974	.935	.899	25	21	19	16	14	12	11
600		1.423	1.380	1.338	1.297	1.257	1.219	1.181	29	26	23	20	18	16	15
800		1.656	1.611	1.567	1.526	1.486	1.448	1.411	32	28	25	22	20	18	16
1,000		1.890	1.836	1.786	1.739	1.695	1.653	1.614	34	30	27	24	22	20	18
1,200		2.140	2.077	2.019	1.964	1.912	1.863	1.818	36	32	28	25	23	21	19
1,400		2.404	2.332	2.265	2.202	2.142	2.086	2.033	37	33	30	27	25	23	21
1,600		2.686	2.603	2.525	2.457	2.384	2.320	2.259	39	35	32	29	26	24	22
1,800		2.986	2.892	2.804	2.721	2.643	2.570	2.501	41	37	34	31	28	26	23
2,000		3.308	3.201	3.100	3.006	2.917	2.834	2.756	43	39	35	32	29	27	25
2,200		3.652	3.531	3.418	3.311	3.211	3.117	3.028	45	41	37	34	31	29	26
2,400		4.021	3.885	3.757	3.637	3.524	3.418	3.319	47	42	38	35	32	29	27
2,600		4.417	4.264	4.121	3.987	3.860	3.741	3.629	49	44	40	37	34	32	29
2,800		4.843	4.673	4.514	4.364	4.222	4.089	3.963	51	47	43	39	36	33	31
3,000		5.299	5.111	4.934	4.768	4.610	4.462	4.322	54	49	45	41	39	35	33
3,200		5.786	5.580	5.385	5.201	5.027	4.863	4.707	57	52	47	43	40	37	34
3,400		6.301	6.079	5.808	5.667	5.476	5.296	5.123	60	55	50	46	42	39	36
3,600		6.842	6.606	6.380	6.163	5.956	5.758	5.570	64	58	53	49	45	42	39
3,800		7.238	6.995	6.760	6.533	6.466	6.253	6.048	68	62	57	52	48	44	41
4,000		7.980	7.725	7.477	7.237	7.002	6.775	6.556	72	66	60	55	51	47	44

Time of Flight and Trajectory Drop for 2.75-Inch Aircraft Rocket at Propellent Temperature of 70° F-Dive Angle 30°

Digitized by Google

2.75-INCH AIRCRAFT ROCKET

DIVE ANGLE = 30°

RELATIVE AIR DENSITY = 1.0

SLANT RANGE IN YARDS	TIME OF FLIGHT IN SECONDS								TRAJECTORY DROP IN MILS						
	TRUE AIRSPEED														
	0	230 m.p.h. 200 knots	288 m.p.h. 250 knots	346 m.p.h. 300 knots	403 m.p.h. 350 knots	461 m.p.h. 400 knots	518 m.p.h. 450 knots	576 m.p.h. 500 knots	230 m.p.h. 200 knots	288 m.p.h. 250 knots	346 m.p.h. 300 knots	403 m.p.h. 350 knots	461 m.p.h. 400 knots	518 m.p.h. 450 knots	576 m.p.h. 500 knots
	PROPELLENT TEMPERATURE 130° F.														
200		.713	.674	.637	.604	.573	.545	.518	17	15	12	11	9	8	7
400		1.054	1.017	.980	.946	.912	.880	.849	23	20	17	15	13	11	10
600		1.297	1.262	1.227	1.194	1.161	1.129	1.098	26	23	20	18	16	14	13
800		1.519	1.478	1.439	1.402	1.367	1.334	1.302	27	24	22	20	18	16	15
1,000		1.754	1.704	1.657	1.612	1.571	1.532	1.495	29	26	23	21	19	17	16
1,200		2.002	1.943	1.888	1.836	1.787	1.741	1.698	31	27	25	22	20	18	17
1,400		2.265	2.197	2.133	2.073	2.016	1.963	1.913	33	30	27	24	22	20	19
1,600		2.545	2.466	2.392	2.322	2.257	2.196	2.138	34	31	28	25	23	21	20
1,800		2.844	2.753	2.668	2.589	2.514	2.444	2.378	36	32	29	26	24	22	20
2,000		3.163	3.060	2.963	2.872	2.787	2.707	2.632	38	34	31	28	26	24	22
2,200		3.505	3.388	3.279	3.176	3.079	2.988	2.902	39	35	32	29	27	25	23
2,400		3.872	3.740	3.617	3.500	3.391	3.288	3.192	42	38	35	32	29	27	25
2,600		4.266	4.118	3.979	3.848	3.725	3.609	3.501	44	40	37	34	31	29	26
2,800		4.689	4.524	4.368	4.222	4.084	3.954	3.832	46	42	38	35	32	30	28
3,000		5.142	4.959	4.786	4.624	4.470	4.325	4.189	49	44	40	37	34	32	29
3,200		5.627	5.426	5.235	5.055	4.885	4.724	4.572	52	48	44	40	37	34	32
3,400		6.140	5.922	5.714	5.517	5.330	5.153	4.984	55	50	46	42	39	36	34
3,600		6.679	6.447	6.224	6.012	5.808	5.614	5.429	59	54	49	45	42	39	36
3,800		7.238	6.995	6.760	6.533	6.315	6.105	5.904	62	57	53	49	45	42	39
4,000		7.814	7.563	7.318	7.080	6.849	6.625	6.409	67	61	56	52	48	44	41

Time of Flight and Trajectory Drop for 2.75-Inch Aircraft Rocket at Propellent Temperature of 130°F-Dive Angle 30°

Digitized by Google

2.75-INCH AIRCRAFT ROCKET

DIVE ANGLE=60°

RELATIVE AIR DENSITY=1.0

SLANT RANGE IN YARDS	TIME OF FLIGHT IN SECONDS								TRAJECTORY DROP IN MILS						
	TRUE AIRSPEED														
	0	230 m.p.h. 200 knots	288 m.p.h. 250 knots	346 m.p.h. 300 knots	403 m.p.h. 350 knots	461 m.p.h. 400 knots	518 m.p.h. 450 knots	576 m.p.h. 500 knots	230 m.p.h. 200 knots	288 m.p.h. 250 knots	346 m.p.h. 300 knots	403 m.p.h. 350 knots	461 m.p.h. 400 knots	518 m.p.h. 450 knots	576 m.p.h. 500 knots
	PROPELLENT TEMPERATURE 10° F.														
200		.825	.770	.720	.675	.634	.597	.564	12	10	8	7	6	5	5
400		1.264	1.204	1.148	1.096	1.046	1.000	.956	17	14	12	10	9	8	7
600		1.588	1.531	1.476	1.424	1.373	1.325	1.278	19	17	14	13	11	10	9
800		1.849	1.795	1.742	1.691	1.642	1.594	1.548	22	19	17	15	13	12	11
1,000		2.087	2.029	1.975	1.923	1.873	1.825	1.780	24	21	19	17	15	13	12
1,200		2.333	2.267	2.205	2.147	2.092	2.041	1.992	24	22	20	18	16	15	13
1,400		2.594	2.517	2.446	2.379	2.317	2.259	2.205	25	22	20	18	16	15	14
1,600		2.872	2.786	2.705	2.629	2.558	2.492	2.429	26	23	21	19	17	15	14
1,800		3.169	3.071	2.980	2.894	2.814	2.739	2.668	27	24	22	20	18	16	15
2,000		3.488	3.378	3.274	3.178	3.087	3.002	2.922	29	26	23	21	19	17	16
2,200		3.830	3.705	3.589	3.480	3.378	3.283	3.193	30	27	24	22	20	18	17
2,400		4.197	4.058	3.928	2.806	3.692	3.585	3.484	31	28	25	23	21	19	18
2,600		4.593	4.438	4.293	4.157	4.029	3.909	3.797	32	29	26	24	22	20	19
2,800		5.019	4.847	4.658	4.534	4.392	4.259	4.133	34	31	28	25	23	21	20
3,000		5.473	5.287	5.109	4.942	4.784	4.636	4.496	35	32	29	26	24	22	21
3,200		5.965	5.759	5.564	5.381	5.207	5.043	4.888	37	34	31	28	26	24	22
3,400		6.487	6.261	6.050	5.851	5.667	5.483	5.312	39	35	32	29	27	25	24
3,600		7.021	6.788	6.566	5.353	5.149	5.954	5.768	41	37	34	31	29	27	25
3,800		7.597	7.337	7.105	6.880	6.664	6.456	6.256	43	39	36	33	30	28	26
4,000		8.152	7.903	7.662	7.429	7.203	6.984	6.772	45	41	38	35	32	30	28

Time of Flight and Trajectory Drop for 2.75-Inch Aircraft Rocket at Propellent Temperature of 10°F-Dive Angle 60°

2.75-INCH AIRCRAFT ROCKET

DIVE ANGLE = 60° **RELATIVE AIR DENSITY = 1.0**

SLANT RANGE IN YARDS	TIME OF FLIGHT IN SECONDS								TRAJECTORY DROP IN MILS						
	TRUE AIRSPEED														
	0	230 m.p.h. 200 knots	288 m.p.h. 250 knots	346 m.p.h. 300 knots	403 m.p.h. 350 knots	461 m.p.h. 400 knots	518 m.p.h. 450 knots	576 m.p.h. 500 knots	230 m.p.h. 200 knots	288 m.p.h. 250 knots	346 m.p.h. 300 knots	403 m.p.h. 350 knots	461 m.p.h. 400 knots	518 m.p.h. 450 knots	576 m.p.h. 500 knots
	PROPELLENT TEMPERATURE 70° F.														
200		.761	.715	.673	.635	.600	.568	.539	10	8	7	6	5	5	4
400		1.144	1.098	1.053	1.011	.971	.933	.896	14	12	11	9	8	7	6
600		1.419	1.376	1.334	1.293	1.254	1.216	1.179	17	15	13	11	10	9	8
800		1.651	1.606	1.563	1.522	1.482	1.444	1.408	19	16	14	12	11	10	9
1,000		1.884	1.831	1.781	1.735	1.691	1.650	1.611	17	17	16	14	13	12	11
1,200		2.133	2.071	2.013	1.958	1.907	1.859	1.814	20	18	16	14	13	12	11
1,400		2.397	2.325	2.258	2.195	2.136	2.080	2.028	21	19	17	15	14	13	12
1,600		2.678	2.596	2.519	2.447	2.379	2.315	2.256	22	20	18	16	15	14	13
1,800		2.978	2.885	2.798	2.715	2.638	2.565	2.497	23	21	19	18	16	15	13
2,000		3.300	3.194	3.095	3.002	2.914	2.831	2.954	24	21	19	18	16	15	14
2,200		3.646	3.526	3.414	3.308	3.209	3.116	3.028	25	22	20	19	17	16	15
2,400		4.018	3.883	3.757	3.638	3.526	3.421	3.322	27	24	22	20	18	17	16
2,600		4.418	4.268	4.126	3.993	3.868	3.749	3.637	28	25	23	21	19	18	17
2,800		4.849	4.682	4.524	4.375	4.235	4.103	3.978	29	26	24	22	20	18	17
3,000		5.311	5.127	4.953	4.788	4.632	4.485	4.345	31	28	26	24	22	20	19
3,200		5.804	5.604	5.413	5.323	5.060	4.897	4.742	32	29	27	25	23	21	20
3,400		6.324	6.109	5.907	5.070	5.520	5.341	5.170	34	31	28	26	24	22	21
3,600		6.866	6.641	6.424	6.214	6.012	5.818	5.631	36	33	30	28	26	24	23
3,800		7.426	7.193	6.966	6.745	6.531	6.324	6.124	39	36	33	30	28	26	24
4,000		8.007	7.762	7.527	7.297	7.073	6.855	6.643	41	38	35	32	30	28	26

Time of Flight and Trajectory Drop for 2.75-Inch Aircraft Rocket at Propellent Temperature of 70°F-Dive Angle 60°

Digitized by Google

2.75-INCH AIRCRAFT ROCKET

DIVE ANGLE = 60° **RELATIVE AIR DENSITY = 1.0**

SLANT RANGE IN YARDS	TIME OF FLIGHT IN SECONDS								TRAJECTORY DROP IN MILS						
	TRUE AIRSPEED														
	0	230 m.p.h. 200 knots	288 m.p.h. 250 knots	346 m.p.h. 300 knots	403 m.p.h. 350 knots	461 m.p.h. 400 knots	518 m.p.h. 450 knots	576 m.p.h. 500 knots	230 m.p.h. 200 knots	288 m.p.h. 250 knots	346 m.p.h. 300 knots	403 m.p.h. 350 knots	461 m.p.h. 400 knots	518 m.p.h. 450 knots	576 m.p.h. 500 knots
	PROPELLENT TEMPERATURE 130° F.														
200		.711	.672	.636	.603	.572	.544	.517	10	8	7	6	5	4	4
400		1.051	1.014	.978	.944	.910	.878	.847	12	10	9	8	7	6	6
600		1.294	1.258	1.224	1.191	1.158	1.126	1.096	15	13	12	10	9	8	7
800		1.516	1.475	1.435	1.399	1.364	1.331	1.300	16	15	13	12	11	10	9
1,000		1.749	1.699	1.653	1.609	1.568	1.529	1.493	17	15	14	12	11	10	9
1,200		1.997	1.939	1.884	1.837	1.784	1.739	1.696	18	16	15	13	12	11	10
1,400		2.259	2.191	2.128	2.068	2.012	1.959	1.909	18	16	15	13	12	11	10
1,600		2.539	2.461	2.388	2.319	2.254	2.193	2.135	19	17	16	14	13	14	11
1,800		2.838	2.748	2.664	2.585	2.511	2.441	2.375	20	18	16	15	14	13	12
2,000		3.159	3.057	2.961	2.871	2.786	2.706	2.631	21	19	18	16	15	14	13
2,200		3.503	3.387	3.279	3.176	3.080	2.989	2.904	22	20	19	17	16	15	14
2,400		3.873	3.743	3.620	3.505	3.396	3.294	2.197	24	22	20	19	17	16	14
2,600		4.271	4.125	3.987	3.857	3.735	3.620	3.512	25	22	20	19	17	16	15
2,800		4.699	4.536	4.383	4.238	4.101	3.972	3.850	26	24	22	21	19	18	16
3,000		5.159	4.979	4.809	4.649	4.496	4.352	4.216	28	26	24	22	20	19	17
3,200		5.650	5.453	5.267	5.089	4.921	4.761	4.610	29	27	25	23	21	20	18
3,400		6.169	5.958	5.756	5.563	5.379	5.204	5.036	31	28	26	24	22	20	19
3,600		6.710	6.488	6.274	6.068	5.869	5.678	5.495	33	30	28	26	24	22	21
3,800		7.269	7.039	6.815	6.598	6.387	6.183	5.986	36	33	30	28	26	24	23
4,000		7.844	7.607	7.375	7.149	6.928	6.713	6.505	38	35	33	30	28	26	24

Time of Flight and Trajectory Drop for 2.75-Inch Aircraft Rocket at Propellent Temperature of 130°F-Dive Angle 60°

Digitized by Google

appendix IV

CONVERSION CHARTS AND GENERAL MATHEMATICS

The major portion of this appendix consists of conversion tables useful in fighter weapons operation. Introductory material is given concerning the definition of a mil, a unit of angular measurement frequently used in calculations involving fighter weapons.

DEFINITION OF A MIL

The mil is a unit of angular measure, defined precisely as 1/1000 of a radian. By this definition, there are $2\pi \times 1{,}000$ mils in a complete circle. Also from this definition, an angle of 1 mil is the angle that is subtended by an arc equal to

$2\pi \times \frac{1}{1{,}000}$ of the circumference of the circle.

For practical reasons, the precise definition is not followed, but either of two approximate definitions is used.

a. The figure $2\pi \times 1{,}000$, which is equal to 6,280, is rounded to 6,400, in which case the equivalence between mils and degrees is

$$\text{mils} = \text{degrees} \times \frac{6{,}400}{360}$$

b. The angle in mils is defined in terms of the chord that subtends the angle at 1,000 units distance. This definition is illustrated in the figure below. For the small angles encountered in harmonization, the definition is sufficiently exact and enables an angle to be easily converted to linear distance on the boresight target. The conversion equation is

$$\begin{array}{c}\text{Linear distance on the}\\ \text{boresight target}\end{array} = \frac{\text{Angle in mils}}{1{,}000} \times \text{Range}$$

where linear distance on the boresight target and the range are expressed in the same units.

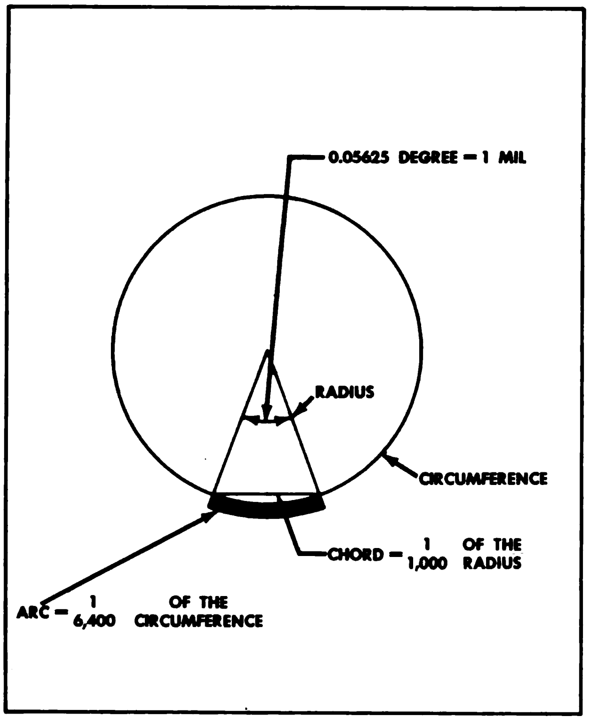

The Angle in Mils is Defined in Terms of the Chord That Subtends the Angle at 1000 Units Distance

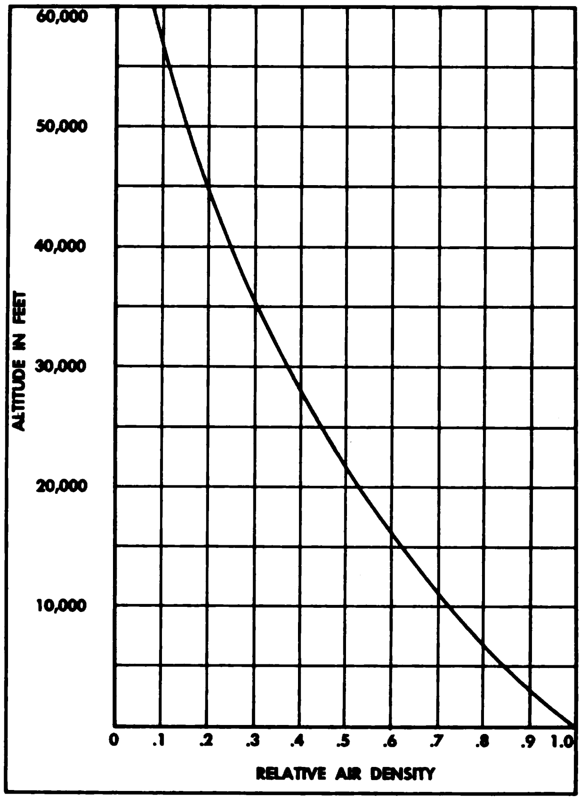

Conversion Chart — Altitude/Air Density

Digitized by Google

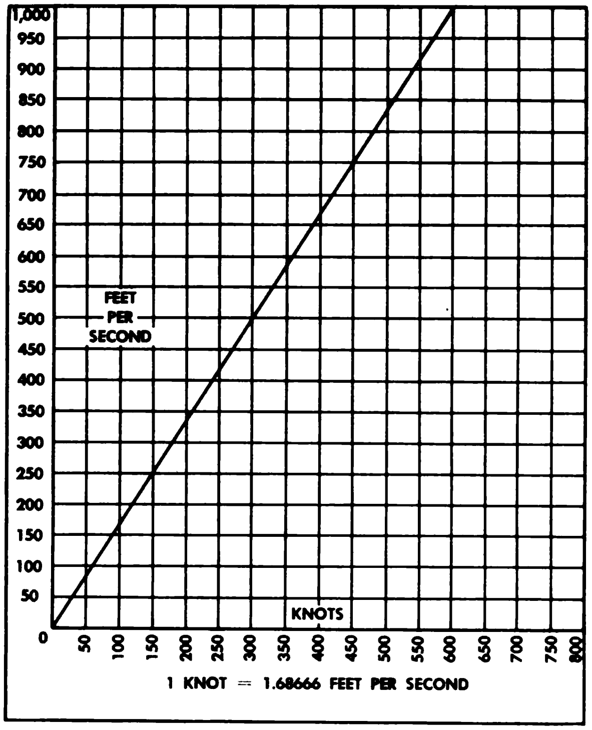

1 KNOT = 1.68666 FEET PER SECOND

Conversion Chart: Knots/Feet per Second

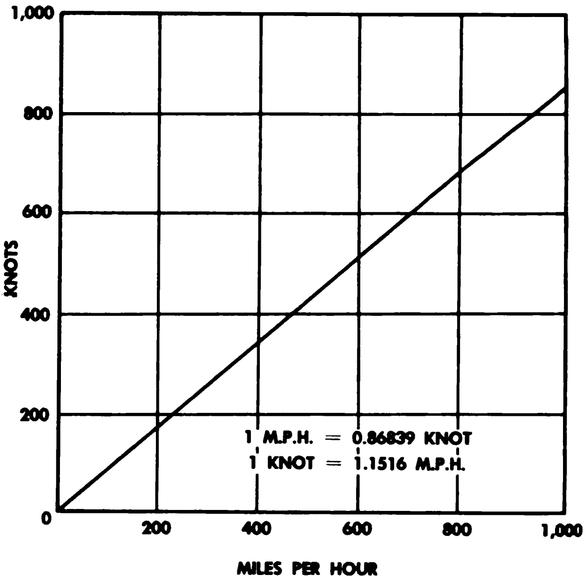

1 M.P.H. = 0.86839 KNOT
1 KNOT = 1.1516 M.P.H.

Conversion Chart: Knots/Miles per Hour

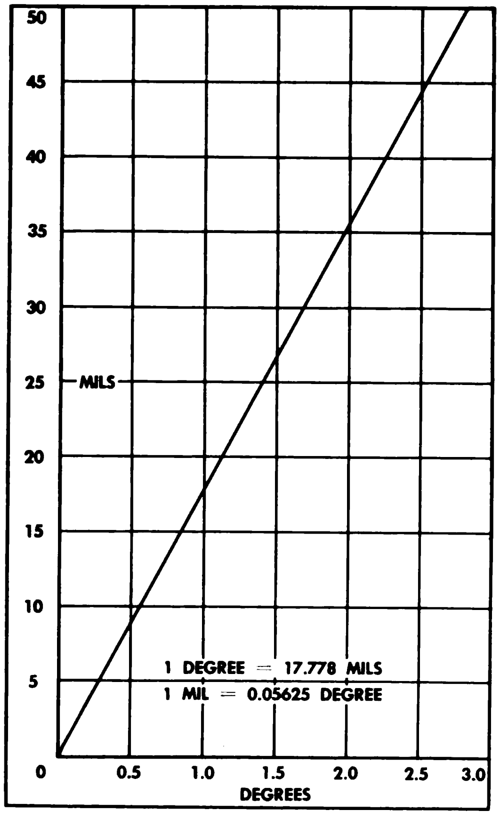

1 DEGREE = 17.778 MILS
1 MIL = 0.05625 DEGREE

Conversion Chart: Mils/Degrees

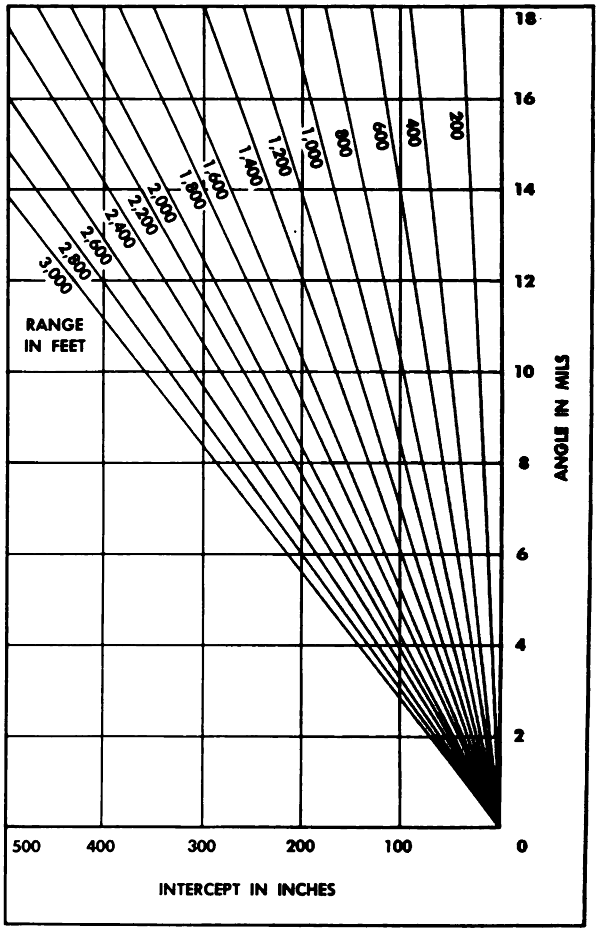

Conversion Chart: Mils/Inches

Digitized by Google

Radians	Degrees	Sines	Tangents	Cotangents	Cosines		
.0000	0° 00′	.0000	.0000	———	1.0000	90° 00′	1.5708
029	10	029	029	343.8	000	89° 50′	679
058	20	058	058	171.9	000	40	650
.0087	30	.0087	.0087	114.6	1.0000	30	1.5621
116	40	116	116	85.94	.9999	20	592
145	50	145	145	68.75	999	10	563
.0175	1° 00′	.0175	.0175	57.29	.9998	89° 00′	1.5533
204	10	204	204	49.10	998	88° 50′	504
233	20	233	233	42.96	997	40	475
.0262	30	.0262	.0262	38.19	.9997	30	1.5446
291	40	291	291	34.37	996	20	417
320	50	320	320	31.24	995	10	388
.0349	2° 00′	.0349	.0349	28.64	.9994	88° 00′	1.5359
378	10	378	378	26.43	993	87° 50′	330
407	20	407	407	24.54	992	40	301
.0436	30	.0436	.0437	22.90	.9990	30	1.5272
465	40	465	466	21.47	989	20	243
495	50	494	495	20.21	988	10	213
.0524	3° 00′	.0523	.0524	19.08	.9986	87° 00′	1.5184
553	10	552	553	18.07	985	86° 50′	155
582	20	581	582	17.17	983	40	126
.0611	30	.0610	.0612	16.35	.9981	30	1.5097
640	40	640	641	15.60	980	20	068
669	50	669	670	14.92	978	10	039
.0698	4° 00′	.0698	.0699	14.30	.9976	86° 00′	1.5010
727	10	727	729	13.73	974	85° 50′	981
756	20	756	758	13.20	971	40	952
.0785	30	.0785	.0787	12.71	.9969	30	1.4923
814	40	814	816	12.25	967	20	893
844	50	843	846	11.83	964	10	864
.0873	5° 00′	.0872	.0875	11.43	.9962	85° 00′	1.4835
902	10	901	904	11.06	959	84° 50′	806
931	20	929	934	10.71	957	40	777
.0960	30	.0958	.0963	10.39	.9954	30	1.4748
989	40	987	992	10.08	951	20	719
.1018	50	.1016	.1022	9.788	948	10	690
.1047	6° 00′	.1045	.1051	9.514	.9945	84° 00′	1.4661
076	10	074	080	9.255	942	83° 50′	632
105	20	103	110	9.010	939	40	603
.1134	30	.1132	.1139	8.777	.9936	30	1.4573
164	40	161	169	8.556	932	20	544
193	50	190	198	8.345	929	10	515
.1222	7° 00′	.1219	.1228	8.144	.9925	83° 00′	1.4486
251	10	248	257	7.953	922	82° 50′	457
280	20	276	287	7.770	918	40	428
.1309	30	.1305	.1317	7.596	.9914	30	1.4399
338	40	334	346	7.429	911	20	370
367	50	363	376	7.269	907	10	341
.1396	8° 00′	.1392	.1405	7.115	.9903	82° 00′	1.4312
425	10	421	435	6.968	899	81° 50′	283
454	20	449	465	6.827	894	40	254
.1484	30	.1478	.1495	6.691	.9890	30	1.4224
513	40	507	524	6.561	886	20	195
542	50	536	554	6.435	881	19	166
.1571	9° 00′	.1564	.1584	6.314	.9877	81° 00′	1.4137
		Cosines	Cotangents	Tangents	Sines	Degrees	Radians

Radians, Degrees, Sines, Tangents, Cotangents, and Cosines

Radians	Degrees	Sines	Tangents	Cotangents	Cosines		
.1571	9° 00′	.1564	.1584	6.314	.9877	81° 00′	1.4137
600	10	593	614	197	872	80° 50	108
629	20	622	644	084	868	40	079
.1658	30	.1650	.1673	5.976	.9863	30	1.4050
687	40	679	703	871	858	20	1.4021
716	50	708	733	769	853	10	992
.1745	10° 00′	.1736	.1763	5.671	.9848	80° 00′	1.3963
774	10	765	793	576	843	79° 50′	934
804	20	794	823	485	838	40	904
.1833	30	.1822	.1853	5.396	.9833	30	1.3875
862	40	851	883	309	827	20	846
891	50	880	914	226	822	10	817
.1920	11° 00′	.1908	.1944	5.145	9.816	79° 00′	1.3788
949	10	937	974	066	811	78° 50′	759
978	20	965	.2004	4.989	805	40	730
.2007	30	.1994	.2035	4.915	.9799	30	1.3701
036	40	.2022	065	843	793	20	672
065	50	051	095	773	787	10	643
.2094	12° 00′	.2079	.2126	4.705	.9781	78° 00′	1.3614
123	10	108	156	638	775	77° 50′	584
153	20	136	186	574	769	40	555
.2182	30	.2164	.2217	4.511	.9763	30	1.3526
211	40	193	247	449	757	20	497
240	50	221	278	390	750	10	468
.2269	13° 00′	.2250	.2309	4.331	.9744	77° 00′	1.3439
298	10	278	339	275	737	76° 50′	410
327	20	306	370	219	730	40	381
.2356	30	.2334	.2401	4.165	.9724	30	1.3352
385	40	363	432	113	717	20	323
414	50	391	462	061	710	10	294
.2443	14° 00′	.2419	.2493	4.011	.9703	76° 00′	1.3265
473	10	447	524	3.962	696	75° 50′	235
502	20	476	555	914	689	40	206
.2531	30	.2504	.2586	3.867	.9681	30	1.3177
560	40	532	617	821	674	20	148
589	50	560	648	776	667	10	119
.2618	15° 00′	.2588	.2679	3.732	.9659	75° 00′	1.3090
647	10	616	711	689	652	74° 50′	061
676	20	644	742	647	644	40	032
.2705	30	.2672	.2773	3.606	.9636	30	1.3003
734	40	700	805	566	628	20	974
763	50	728	836	526	621	10	945
.2793	16° 00′	.2756	.2867	3.487	.9613	74° 00′	1.2915
822	10	784	899	450	605	73° 50′	886
851	20	812	931	412	596	40	857
.2880	30	.2840	.2962	3.376	.9588	30	1.2828
909	40	868	994	340	580	20	799
938	50	896	.3026	305	572	10	770
.2967	17° 00′	.2924	.3057	3.271	.9563	73° 00′	1.2741
996	10	952	089	237	555	72° 50′	712
.3025	20	979	121	204	546	40	683
.3054	30	.3007	.3153	3.172	.9537	30	1.2654
083	40	035	185	140	528	20	625
113	50	062	217	108	520	10	595
.3142	18° 00′	.3090	.3249	3.078	.9511	72° 00′	1.2566
		Cosines	Cotangents	Tangents	Sines	Degrees	Radians

Radians, Degrees, Sines, Tangents, Cotangents, and Cosines

Digitized by Google

Radians	Degrees	Sines	Tangents	Cotangents	Cosines		
.3142	18° 00′	.3090	.3249	3.078	.9511	72° 00′	1.2566
171	10	118	281	047	502	71° 50′	537
200	20	145	314	018	492	40	508
.3229	30	.3173	.3346	2.989	.9483	30	1.2479
258	40	201	378	960	474	20	450
287	50	228	411	932	465	10	421
.3316	19° 00′	.3256	.3443	2.904	.9455	71° 00′	1.2392
345	10	283	476	877	446	70° 50′	363
374	20	311	508	850	436	40	334
.3403	30	.3338	.3541	2.824	.9426	30	1.2305
432	40	365	574	798	417	20	275
462	50	393	607	773	407	10	246
.3491	20° 00′	.3420	.3640	2.747	.9397	70° 00′	1.2217
520	10	448	673	723	387	69° 50′	188
549	20	475	706	699	377	40	159
.3578	30	.3502	.3739	2.675	.9367	30	1.2130
607	40	529	772	651	356	20	101
636	50	557	805	628	346	10	072
.3665	21° 00′	.3584	.3839	2.605	.9336	69° 00′	1.2043
694	10	611	872	583	325	68° 50′	1.2014
723	20	638	906	560	315	40	985
.3752	30	.3665	.3939	2.539	.9304	30	1.1956
782	40	692	973	517	293	20	926
811	50	719	.4006	496	283	10	897
.3840	22° 00′	.3746	.4040	2.475	.9272	68° 00′	1.1868
869	10	773	074	455	261	67° 50′	839
898	20	800	108	434	250	40	810
.3927	30	.3827	.4142	2.414	.9239	30	1.1781
956	40	854	176	394	228	20	752
985	50	881	210	375	216	10	723
.4014	23° 00′	.3907	.4245	2.356	.9205	67° 00′	1.1694
043	10	934	279	337	194	66° 50′	665
072	20	961	314	318	182	40	636
.4102	30	.3987	.4348	2.300	.9171	30	1.1606
131	40	.4014	383	282	159	20	577
160	50	041	417	264	147	10	548
.4189	24° 00′	.4067	.4452	2.246	.9135	66° 00′	1.1519
218	10	094	487	229	124	65° 50′	490
247	20	120	522	211	112	40	461
.4276	30	.4147	.4557	2.194	.9100	30	1.1432
305	40	173	592	177	088	20	403
334	50	200	628	161	075	10	374
.4363	25° 00′	.4226	.4663	2.145	.9063	65° 00′	1.1345
392	10	253	699	128	051	64° 50′	316
422	20	279	734	112	038	40	286
.4451	30	.4305	.4770	2.097	.9026	30	1.1257
480	40	331	806	081	013	20	228
509	50	358	841	066	001	10	199
.4538	26° 00′	.4384	.4877	2.050	.8988	64° 00′	1.1170
567	10	410	913	035	975	63° 50′	141
596	20	436	950	020	962	40	112
.4625	30	.4462	.4986	2.006	.8949	30	1.1083
654	40	488	.5022	1.991	936	20	054
683	50	514	059	977	923	10	1.1025
.4712	27° 00′	.4540	.5095	1.963	.8910	63° 00′	1.0996
		Cosines	Cotangents	Tangents	Sines	Degrees	Radians

Radians, Degrees, Sines, Tangents, Cotangents, and Cosines

Digitized by Google

Radians	Degrees	Sines	Tangents	Cotangents	Cosines		
.4712	27° 00′	.4540	.5095	1.963	.8910	63° 00′	1.0996
741	10	566	132	949	897	62° 50′	966
771	20	592	169	935	884	40	937
.4800	30	.4617	.5206	1.921	.8870	30	1.0908
829	40	643	243	907	857	20	879
858	50	669	280	894	843	10	850
.4887	28° 00′	.4695	.5317	1.881	.8829	62° 00′	1.0821
916	10	720	354	868	816	61° 50′	792
945	20	746	392	855	802	40	763
.4974	30	.4772	.5430	1.842	.8788	30	1.0734
.5003	40	797	467	829	774	20	705
032	50	823	505	816	760	10	676
.5061	29° 00′	.4848	.5543	1.804	.8746	61° 00′	1.0647
091	10	874	581	792	732	60° 50′	617
120	20	899	619	780	718	40	588
.5149	30	.4924	.5658	1.767	.8704	30	1.0559
178	40	950	696	756	689	20	530
207	50	975	735	744	675	10	501
.5236	30° 00′	.5000	.5774	1.732	.8660	60° 00′	1.0472
265	10	025	812	720	646	59° 50′	443
294	20	050	851	709	631	40	414
.5323	30	.5075	.5890	1.698	.8616	30	1.0385
352	40	100	930	686	601	20	356
381	50	125	969	675	587	10	327
.5411	31° 00′	.5150	.6009	1.664	.8572	59° 00′	1.0297
440	10	175	048	653	557	58° 50′	268
469	20	200	088	643	542	40	239
.5498	30	.5225	.6128	1.632	.8526	30	1.0210
527	40	250	168	621	511	20	181
556	50	275	208	611	496	10	152
.5585	32° 00′	.5299	.6249	1.600	.8480	58° 00′	1.0123
614	10	324	289	590	465	57° 50′	094
643	20	348	330	580	450	40	065
.5672	30	.5373	.6371	1.570	.8434	30	1.0036
701	40	398	412	560	418	20	1.0007
730	50	422	453	550	403	10	977
.5760	33° 00′	.5446	.6494	1.540	.8387	57° 00′	.9948
789	10	471	536	530	371	56° 50′	919
818	20	495	577	520	355	40	890
.5847	30	.5519	.6619	1.511	.8339	30	.9861
876	40	544	661	501	323	20	832
905	50	568	703	1.492	307	10	803
.5934	34° 00′	.5592	.6745	1.483	.8290	56° 00′	.9774
963	10	616	787	473	274	55° 50′	745
992	20	640	830	464	258	40	716
.6021	30	.5664	.6873	1.455	.8241	30	.9687
050	40	688	916	446	225	20	657
080	50	712	959	437	208	10	628
.6109	35° 00′	.5736	.7002	1.428	.8192	55° 00′	.9599
138	10	760	046	419	175	54° 50′	570
167	20	783	089	411	158	40	541
.6196	30	.5807	.7133	1.402	.8141	30	.9512
225	40	831	177	393	124	20	483
254	50	854	221	385	107	10	454
.6283	36° 00′	.5878	.7265	1.376	.8090	54° 00′	.9425
		Cosines	Cotangents	Tangents	Sines	Degrees	Radians

Radians, Degrees, Sines, Tangents, Cotangents, and Cosines

Digitized by Google

Radians	Degrees	Sines	Tangents	Cotangents	Cosines		
.6283	36° 00′	.5878	.7265	1.376	.8090	54° 00′	.9425
312	10	901	310	368	073	53° 50′	396
341	20	925	355	360	056	40	367
.6370	30	.5948	.7400	1.351	.8039	30	.9338
400	40	972	445	343	021	20	308
429	50	995	490	335	004	10	279
.6458	37° 00′	.6018	.7536	1.327	.7986	53° 00′	.9250
487	10	041	581	319	969	52° 50′	221
516	20	065	627	311	951	40	192
.6545	30	.6088	.7673	1.303	.7934	30	.9163
574	40	111	720	295	916	20	134
603	50	134	766	288	898	10	105
.6632	38° 00′	.6157	.7813	1.280	.7880	52° 00′	.9076
661	10	180	860	272	862	51° 50′	047
690	20	202	907	265	844	40	.9018
.6720	30	.6225	.7954	1.257	.7826	30	.8988
749	40	248	.8002	250	808	20	959
778	50	271	050	242	790	10	930
.6807	39° 00′	.6293	.8098	1.235	.7771	51° 00′	.8901
836	10	316	146	228	753	50° 50′	872
865	20	338	195	220	735	40	843
.6894	30	.6361	.8243	1.213	.7716	30	.8814
923	40	383	292	206	698	20	785
952	50	406	342	199	679	10	756
.6981	40° 00′	.6428	.8391	1.192	.7660	50° 00′	.8727
.7010	10	450	441	185	642	49° 50′	698
039	20	472	491	178	623	40	668
.7069	30	.6494	.8541	1.171	.7604	30	.8639
098	40	517	591	164	585	20	610
127	50	539	642	157	566	10	581
.7156	41° 00′	.6561	.8693	1.150	.7547	49° 00′	.8552
185	10	583	744	144	528	48° 50′	523
214	20	604	796	137	509	40	494
.7243	30	.6626	.8847	1.130	.7490	30	.8465
272	40	648	899	124	470	20	436
301	50	670	952	117	451	10	407
.7330	42° 00′	.6691	.9004	1.111	.7431	48° 00′	.8378
359	10	713	057	104	412	47° 50′	348
389	20	734	110	098	392	40	319
.7418	30	.6756	.9163	1.091	.7373	30	.8290
447	40	777	217	085	353	20	261
476	50	799	271	079	333	10	232
.7505	43° 00′	.6820	.9325	1.072	.7314	47° 00′	.8203
534	10	841	380	066	294	46° 50′	174
563	20	862	435	060	274	40	145
.7592	30	.6884	.9490	1.054	.7254	30	.8116
621	40	905	545	048	234	20	087
650	50	926	601	042	214	10	058
.7679	44° 00′	.6947	.9657	1.036	.7193	46° 00′	.8029
709	10	967	713	030	173	45° 50′	999
738	20	988	770	024	153	40	970
.7767	30	.7009	.9827	1.018	.7133	30	.7941
796	40	030	884	012	112	20	912
825	50	050	942	006	092	10	883
.7854	45° 00′	.7071	1.000	1.000	.7071	45° 00′	.7854
		Cosines	Cotangents	Tangents	Sines	Degrees	Radians

Radians, Degrees, Sines, Tangents, Cotangents, and Cosines

Digitized by Google

appendix V

FIRE CONTROL PROBLEM CALCULATIONS

This appendix explains the calculations necessary in three types of fighter-weapons operation, air-to-air firing, low-level or skip bombing, and dive bombing. For each type of operation, terms and symbols peculiar to the sighting problem involved are listed and explained. Formulas used in the computation of the mil lead or required sight depression are given and then the derivations of these formulas are explained, step by step. Finally, in each case, a sample problem is worked in order to demonstrate the practical application of these formulas.

AIR-TO-AIR FIRE CONTROL CALCULATIONS

This section contains formulas required for determining mil lead in air-to-air fighter weapons operation, and explains how these formulas were derived. The following data are needed before the solution of actual problems in air-to-air firing is attempted.

Range
Angle-off
Altitude
Target speed
Fighter speed
Type of ammunition
Angle of attack for various *g* conditions
Relationship of fixed bore to fuselage reference line

Terms and Symbols used in air-to-air fire-control calculations

Many of the terms and symbols used in air-to-air firing calculations are common to the vocabulary of gunnery.

l, mil lead for target motion.
V_f, fighter velocity in feet per second.
V_t, target velocity in feet per second.
V_p, projectile velocity in feet per second.
θ, present angle off.
ϕ, future angle off (collision angle of the projectile).
r, present range.
R, future range (distance over which projectile will travel to target).
A, radial acceleration.
g, acceleration due to gravity (32.2 feet per second per second).
G, total *g* forces on the aircraft.
B, angle of bank.
E, trajectory shift in mils.
AGF, angle between fixed bore and flight path.
V_m, muzzle velocity in feet per second.
E_l, lateral component of trajectory shift.
E_v, vertical component of trajectory shift.
l_g, gravity drop in mils for future range.
L, total lateral lead.
L_v, total vertical lead.

Computation of required lead

1. Find mill lead for target motion.

$$l = \frac{V_t \text{ (sine } \theta) \text{ } 1{,}000}{V_p}$$

2. Find trajectory shift in mils.
   a. Find future angle-off.

$$\phi = \theta - l$$

   b. Find future range.

$$R = \frac{r \text{ (sine } \theta)}{\text{sine } \phi}$$

   c. Find radial acceleration.

$$A = \frac{(V_t)\ (V_f)\ (\text{sine } \phi)}{g\ (R)}$$

   d. Find angle of bank.

Tangent B = A

   e. Find total *g* forces on aircraft

$$G = \frac{1}{\text{cosine B}}$$

   f. Find angle of attack for G and solve for trajectory shift.

$$E = \frac{(\text{AGF})\ (V_f)}{V_f + V_m}$$

Digitized by Google

g. Convert E into E_l and E_v.

$$E_l = (E)\ (\text{sine } B)$$
$$E_v = (E)\ (\text{cosine } B)$$

3. Find vertical lead for gravity drop.

$$l_g = \frac{(\text{gravity drop for } R)\ 1{,}000}{R}$$

4. Find total lateral lead and total vertical lead.

$$L = l + E_l$$
$$L_v = l_g + E_v$$

In the previous method of computing the required lead for a given set of conditions, two assumptions were made concerning the attitude of the attacking aircraft and the velocity of the projectile. The aircraft is assumed to be in a level turn. It is also assumed that the projectile velocity would be the same for future range as for present range. Actually, the making of these assumptions in a theoretical illustration does not invalidate the procedure for practical application, since variation from the assumed conditions will, in either case, only slightly affect the end result. The main thing to keep in mind is that this method is a ground reference or a static solution to a problem that is actually a dynamic or airborne one.

A sample problem is worked out at the end of this section. However before going into the actual calculations, a brief study of the derivations of the steps will clarify the problem.

Derivation of Steps in the Air-to-Air Problem

In solving the problem, use can be made of the conversion table, given in appendix IV, for converting angles of 3° or less into mils. Another means for converting angles of 8° or less into mils is to multiply the angle by 17.778 to give the mil value, or to multiply the sine of the angle by 1,000. When it is necessary to multiply, the latter method is most frequently used.

1. Find mil lead for target motion.

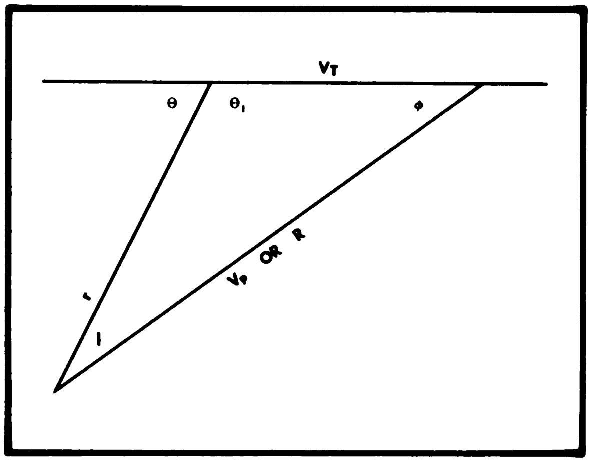

Calculation of Mil Lead for Target Motion

The condition illustrated above exists at one particular instant on any curve of pursuit. In trigonometry, it is learned that functions of supplementary angles are equal in value. That is, the sine of 60° is equal to the sine of 120°. Therefore, in solving the triangle for l or mil lead, the sine of the present angle-off can be used. V_t or target velocity is in feet per second, as is V_p, projectile velocity. In finding V_p, present range is divided by the time of flight. Thus,

$$V_p = \frac{\text{Present range}}{\text{Time of flight}}$$

The use of the present range to find the velocity of the projectile may result in a slight error in the quotient, since the projectile would not travel at the same velocity over future range as it would over present range. Present and future range are usually within 100 feet of one another, so actually this error is negligible.

To solve the triangle, the law of sines is utilized.

$$\frac{\text{sine } l}{V_t} = \frac{\text{sine } \theta}{V_p}$$
$$\text{sine } l = \frac{V_t\ (\text{sine } \theta)}{V_p}$$
$$l = \frac{V_t\ (\text{sine } \theta)\ 1{,}000}{V_p}$$

2. Find trajectory shift in mils.

a. Find future angle-off. Note the following solution of the triangle used in the previous step.

$$\theta + \theta_1 = 180°$$
$$l + \theta_1 + \phi = 180°$$
$$l + \theta_1 + \phi = \theta + \theta_1$$
$$l + \phi = \theta$$
$$\phi = \theta - l$$

Digitized by Google

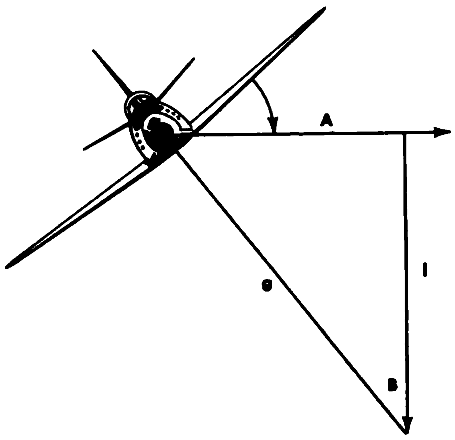

Tangent B $= \frac{A}{I}$

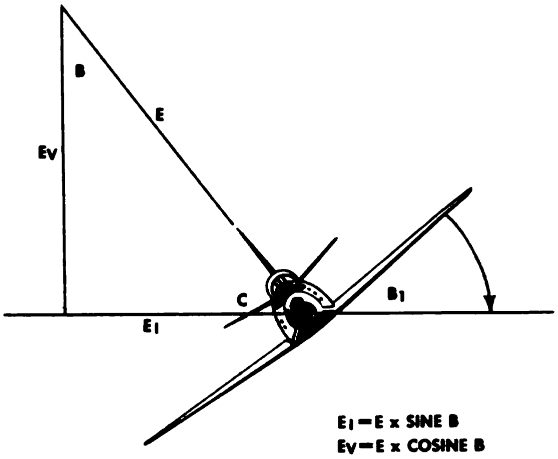

Trajectory Shift Triangle

b. Find future range. Here again the law of sines is used.

$$\frac{R}{\text{sine } \theta} = \frac{r}{\text{sine } \phi}$$

$$R = \frac{r \text{ sine } \theta}{\text{sine } \phi}$$

c. Find radial acceleration. Using the centrifugal force formula, determine A.

$$A = \frac{(V_t)\ (V_f) \text{ sine } \phi}{g R}$$

d. Find angle of bank. Once A has been determined, the angle of bank can be found, using A as the tangent of the angle of bank.

e. Find total *g* forces on aircraft. In solving for G in the triangle shown above, we find that

$$G = \frac{1}{\text{Cosine of B}}$$

f. Find angle of attack for G and solve for trajectory shift. The angle of attack for any specific *g* can be found by consulting the technical order for that particular aircraft. Once that the angle of attack has been determined, the angle between the fixed bore and flight path, or AGE as it is termed, may be substituted into the trajectory shaft formula.

$$E = \frac{(AGF)\ (V_f)}{V_f + V_m}$$

g. Convert E into E_l and E_v. Trajectory shift, E, can be broken down into a lateral (E_l) and a vertical component (E_v).

In the above triangle of trajectory shift, note that angle B is equal to the angle of bank B_1.

$$B_1 + C = 90°$$

$$B + C = 90°$$

$$B_1 = B$$

$$\text{Sine } B = \frac{E_l}{E}$$

$$E_l = E \text{ (sine B)}$$

$$\text{Cosine } B = \frac{E_v}{E}$$

$$E_v = E \text{ (cosine B)}$$

3. Find vertical lead for gravity drop. The overall vertical lead must include a component which is a correction for gravity drop. This can be designated as l_g, and is the gravity drop in mils over future range.

By consulting the dynamic gravity drop charts, the drop in inches over the future range can be found. The amount is converted into feet since range in the formula is in feet. By multiplying this figure by 1,000 (converting it into mils), and dividing by the future range, we obtain the gravity drop in mils over future range.

$$l_g = \frac{\text{Gravity drop for R in feet (1,000)}}{R}$$

Digitized by Google

4. Find total lateral lead and total vertical lead. The sum of l or lead for target motion and E_l (the lateral component of trajectory shift) will give us the total required lateral lead or L.

$$L = l + E_l$$

The sum of l_g (gravity drop correction needed in mils) and E_v (the vertical component of trajectory shift) will give us the total required vertical lead, L_v.

$$L_v = l_g + E_v$$

Sample Air-to-Air Problem

Given:

Target speed, 300 m.p.h. TAS

Fighter speed, 450 m.p.h. TAS

Altitude, 0.6 density

Present range (r), 800 feet

Angle-off 20°

M-8 ammunition

Guns depressed 20 mils below fuselage reference line

g's		*Angle of attack*
1	=	20 mils
2	=	42 mils
3	=	58 mils
4	=	72 mils

1. Find l or mil lead for target motion

$V_t = (300)\ (1.466) = 439.8$ feet per second

$V_f = (450)\ (1.466) = 659.7$ feet per second

$$V_p = \frac{800}{0.23} = 3{,}478 \text{ feet per second}$$

$$l = \frac{V_t(\text{sine } \theta)1{,}000}{V_p} = \frac{(440)(0.342)1{,}000}{3{,}478} = 43.4$$

2. Find trajectory shift in mils

a. Find future angle-off

$\phi = \theta - l = 20° - 2°30' = 17°30'$

b. Find future range

$$R = \frac{r(\text{sine } \theta)}{\text{sine } \phi} = \frac{(800)(.342)}{(.3018)} = 906 \text{ feet}$$

c. Find radial acceleration

$$A = \frac{(V_t)(V_f)(\text{sine } \phi)}{g\,R} = \frac{(440)(660)(.3018)}{(32.2)(906)} = 3.016$$

d. Find angle of bank

Tangent B = A

Tangent B = 3.01

B = 70°40′

e. Find total *g*'s on aircraft

$$G = \frac{1}{\text{cosine B}} = \frac{1}{.3145} = 3.18\ g\text{'s}$$

f. Find angle of attack for *g* and solve for trajectory shift

Angle of attack for 3 *g*'s = 58 mils

Angle of attack for 4 *g*'s = 72 mils

Angle of attack for 3.18 *g*'s = 61 mils

AGF = 61 − 20 = 41 mils (Remember that the guns are depressed 20 mils below fuselage reference line.)

$$E = \frac{\text{AGF }(V_f)}{V_f + V_m} = \frac{(41)(660)}{660 + 2870} = 7.66 \text{ mils}$$

g. Convert E into E_l and E_v.

$E_l = (E)(\text{sine B}) = (7.66)(.9492) = 7.3$ mils

$E_v = (E)(\text{cosine B}) = (7.66)(.3145) = 2.4$ mils

3. Find vertical lead for gravity drop

$$l_g = \frac{(\text{Gravity drop for R})\ 1{,}000}{R}$$

gravity drop for R in inches = 14

$$\frac{14}{12} = 1.17 \text{ feet}$$

$$l_g = \frac{(1.17)\ (1{,}000)}{906} = 1.2 \text{ mils}$$

4. Find total lateral lead and total vertical lead

$L = l + E_l = 43.4 + 7.3 = 50.7$ mils

$L_v = l_g\ E_v = 1.2 + 2.4 = 3.6$ mils

CALCULATION OF THE LOW LEVEL (SKIP) BOMBING SIGHT DEPRESSION

Terms and Symbols Used in Sighting Problem

The special terms and simbols used in low level bombing calculations are illustrated in the diagram on this page and are defined on the following page.

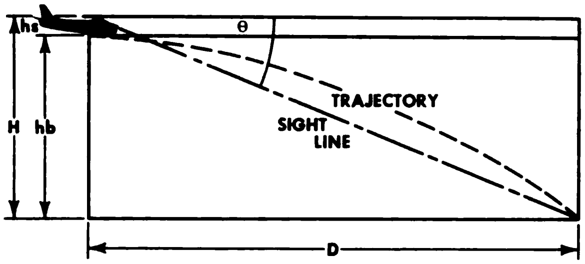

Low Level (Skip) Bombing

V_f, fighter speed in feet per second.

hs, height of sight above the bomb.

hb, height of bomb above the ground.

H, height of sight above the ground. (hs+hb).

D, horizontal distance traveled by bomb after release.

t, time of fall of bomb.

θ, sight depression angle.

g, acceleration due to gravity (32.2 feet per second).

Calculation of the Sight Depression

1. Convert the fighter speed in knots or miles per hour into feet per second.

V_f m.p.h. (TAS) $\times 1.466 = V_f$ feet per second.

V_f knots. (TAS) $\times 1.69 = V_f$ feet per second.

2. Use Newton's formula to find time of fall of the bomb.

$S = \frac{1}{2} a\, t^2$, where

S = distance.

a = acceleration applied to body.

t = time acceleration is applied.

Bombing theory terms may be substituted:

$$S = \tfrac{1}{2} a\, t^2$$
$$\text{or } hb = \tfrac{1}{2} g\, t^2$$
$$\text{or } t = \sqrt{\frac{hb}{\frac{1}{2}g}}$$

The time of fall of the bomb is now known.

3. The horizontal distance traveled by the bomb after release (D) is the product of the time of the fall of the bomb and the horizontal velocity of the bomb. As the *ideal bomb* is being considered, this velocity is that of the aircraft. (See chapter 8 for a definition of the ideal bomb.)

Therefore, $D = t \times V_f$

4. The point of impact of the bomb on the ground is now known, therefore the sight line in the cockpit has only to be depressed through angle θ to intersect this point.

To calculate this angle, tangent $\theta = \frac{H}{D}$

This gives the depression angle in degrees. To correct it to mils it is multiplied by 17.778.

Sample Problem

Calculate the sight depression necessary to hit a target when an aircraft is flying with its bomb 36 feet above the ground at 400 m.p.h. The gunsight is 6 feet above the bomb.

(a) $Vf = 400 \times 1.466$
$= 586.4$ feet per second

(b) $t = \sqrt{\frac{hb}{\frac{1}{2}g}}$
$= \sqrt{\frac{36}{16.1}}$
$= 1.49$ seconds

(c) $D = t \times V_f$
$= 1.49 \times 586.4$
$= 873.736$ ft.

(d) tangent $\theta = \frac{H}{D}$
$= \frac{42}{873.736}$
$= .04806$

Therefore angle $\theta = 2°45'$
or $= 2.75°$

Mil sight depression $= 2.75 \times 17.78$
$= 48.89$ mils

CALCULATION OF THE DIVE BOMBING SIGHT DEPRESSION

Terms and Symbols Used in Sighting Problems

The special terms and symbols used in dive bombing calculations are illustrated on the next page and are defined below.

V_f, fighter speed in feet per second.

V_v, vertical component of fighter speed in feet per second.

V_h, horizontal component of fighter speed in feet per second.

H, height of aircraft above the ground at release point.

V_i, vertical component of impact velocity of bomb in ft. per sec.

t, time of fall of bomb.

g, acceleration due to gravity (32.2 feet per second).

d, horizontal distance traveled by bomb after release.

SR, slant range.

Digitized by Google

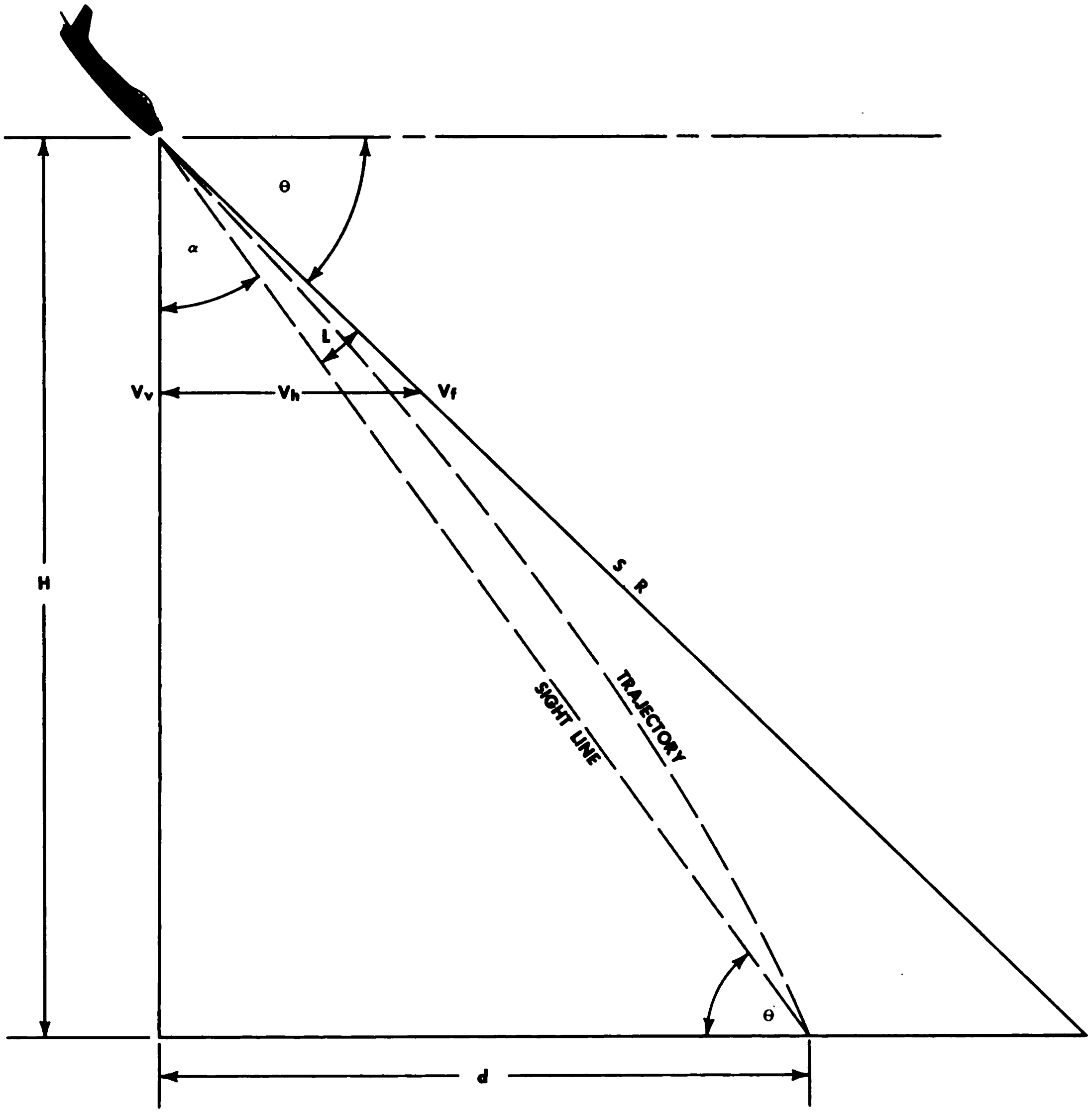

Dive Bombing

θ, dive angle.

α, angle between the sight line and vertical at release.

L, sight depression.

1. Convert fighter speed in knots or m.p.h. into feet per sec.

V_f m.p.h. (TAS) × 1.466 = V_f in feet per second.

V_f knots (TAS) × 1.69 = V_f in feet per second.

2. The aircraft is known to be diving at angle θ at an airspeed of V_f, therefore this velocity can be resolved into vertical and horizontal components.

$$\text{Sine } \theta = \frac{V_v}{V_f}$$

Therefore, $V_v = V_f \text{ sine } \theta$

$$\text{Cosine } \theta = \frac{V_h}{V_f}$$

Therefore, $V_h = V_f \text{ cosine } \theta$

3. The bomb is to be released at a given slant range, therefore the altitude of the aircraft at release point is required.

$$\text{Sine } \theta = \frac{H}{S\,R}$$

Therefore, $H = SR \text{ sine } \theta$

Digitized by Google

4. Use Newton's formula to determine the vertical component of the impact velocity of the bomb.

$V^2 = U^2 + 2aS$, where

V = final velocity of body.

U = initial velocity of body.

a = acceleration applied to body.

S = distance.

Bombing theory terms may be substituted.

$$V^2 = U^2 + 2aS$$

$$\text{or } V_i^2 = V_v^2 + 2_gH$$

$$\text{or } V_i = \sqrt{V_v^2 + 2_gH}$$

The vertical component of the impact velocity of the bomb is now known.

5. To determine the time of fall of the bomb the change of vertical velocity has to be divided by the acceleration applied to the bomb.

$$t = \frac{V_i - V_v}{g}$$

6. Since an *ideal bomb* (defined in chapter 8) is being used there is no loss of speed due to air resistance; therefore, the horizontal speed of the bomb at impact is the same as when it was released, namely V_h. Then the horizontal distance that the bomb tracks after release is the product of the bomb's horizontal velocity and time of fall.

$$d = t \times V_h$$

$$\text{Tangent } \alpha = \frac{d}{H}$$

$$L = 90° - (\alpha + \Theta)$$

This gives the depression angle in degrees. To convert it to mils it is multiplied by 17.778.

Sample Problem

Calculate the sight depression necessary to hit a target when an aircraft is in a 40° dive at 375 knots and releases the bomb at a slant range of 5,000 ft.

$V_f = 375 \times 1.69$

$= 633.75$ feet per second

$V_v = V_f \text{ sine } \Theta$

$= 633.75 \times .6427$

$= 407.31$ feet per second

$V_h = V_f \text{ cosine } \Theta$

$= 633.75 \times .7660$

$= 485.45$ feet per second

$H = SR \text{ sine } \Theta$

$= 5000 \times .6424$

$= 3213.5$ feet

$V_i = \sqrt{V_v^2 + 2_gH}$

$= 407.31^2 + 2 \times 32.2 \times 3213.5$

$= 372850.8$

$= 610.6$ feet per second

$$t = \frac{V_i - V_v}{g}$$

$$= \frac{610.6 - 407.31}{32.2}$$

$= 6.31$ seconds

$d = t \times V_h$

$= 6.31 \times 485.45$

$= 3063.18$ feet

$$\text{Tangent } \alpha = \frac{d}{H}$$

$$= \frac{3063.18}{3213.5}$$

$= .9532$

$\angle \alpha = 43° \; 38'$

$L = 90° - (\alpha + \Theta)$

$= 90° - (43° \; 38' + 40°)$

$= 6° \; 22'$

$= 6.36°$

Therefore, mil depression $= 6.36 \times 17.78$

$= 113.08$ mils

Digitized by Google

appendix VI

DERIVATION OF THE TRAJECTORY SHIFT FORMULA

One formula is generally used for the computation of trajectory shift or velocity jump. This formula is derived in the following manner:

$$E = \frac{V_f\,(AGF)}{V_f + V_m}, \text{ where}$$

E is trajectory shift in mils.

AGF is the difference between fixed bore line and flight path in mils. (This may also be the angle of attack of the aircraft if the fixed bore line is parallel to the fuselage reference line of the aircraft.)

V_f is fighter velocity in feet per second, true airspeed.

V_m is muzzle velocity in feet per second.

The derivation of the E formula is based on the law of sines and the law of cosines, illustrated by the parallelogram below.

The law of sines states that:

$$\frac{\text{sine } E}{V_f} = \frac{\text{sine } AGF}{AB}$$

AGF is used here because two supplementary angles have their functions equal.

$$\text{sine } E = \frac{\text{sine } AGF\ (V_f)}{AB}$$

With an AGF angle of less than 8° the value of E will be in mils.

$$E = \frac{AGF\ (V_f)}{AB}$$

The law of cosines states that:

$$a^2 = b^2 + c^2 - 2bc \times \text{cosine } A$$

Substituting terms we have:

$$AB^2 = V_m^2 + V_f^2 - 2V_mV_f \times \text{cosine } AGF$$

Angle AGF is a very small angle; therefore, the cosine of AGF can be considered to be 1. It will also be of a negative value, because it is in the second quadrant, as can be seen in the graph of the cosine function below.

$$AB^2 = V_m^2 + V_f^2 - (2V_mV_f) \times (-1)$$

$$AB^2 = V_m^2 + V_f^2 + 2V_mV_f$$

$$= (V_m + V_f)^2$$

$$AB = V_m + V_f$$

$$E = \frac{V_f(AGF)}{V_f + V_m}$$

The mathematically correct trajectory shift formula follows.

$$\text{Sine } E = \frac{V_f(\text{sine } AGF)}{(V_m^2 + V_f^2 - 2V_mV_f \times \text{cosine } AGF)^{1/2}}$$

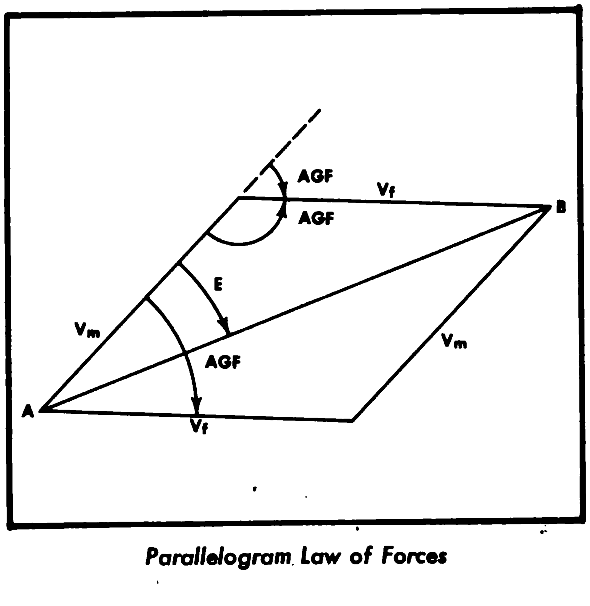

Parallelogram Law of Forces

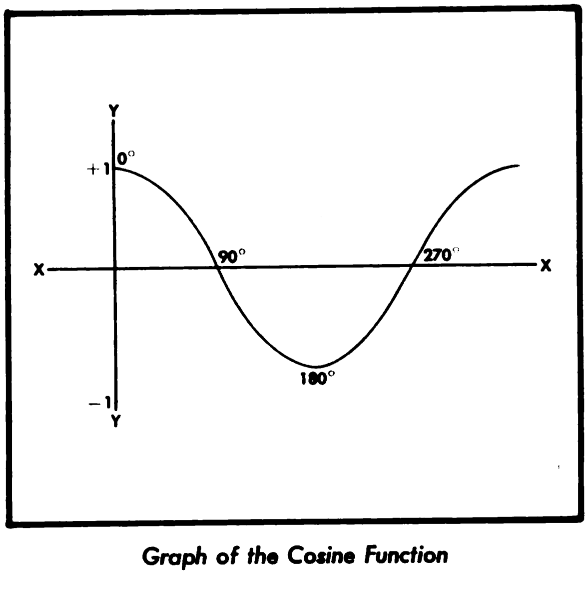

Graph of the Cosine Function

Digitized by Google

appendix VII

ROCKET RAIL ALIGNMENT DATA

Airframe manufactures provide specific values concerning how the launcher rails are orientated to the fuselage reference line (FRL) of the aircraft. A positive value indicates the amount below the FRL and a negative value indicates the amount above the FRL. These values are shown in the table at the right.

Aircraft Type	Alinement Value (Mils)
F-84 D, E, G,	−2.67
F-84 F	+4.35
F-86 A	+17.7
F-86 E	+17.7
F-86 F	+17.7
F-86 H	+17.7

Rocket Rail Alinement Data for Specific Aircraft

appendix VIII

FILM ASSESSING CHART CALCULATIONS

Film assessing charts can be constructed for any target as long as the target dimensions and the angular coverage of the camera lens is known. The two types of lenses that are in use in the Air Force are the 3-inch lens and the 35-mm lens. The angular projection for the 35-mm lens is 214 mils. Thus, one frame of 16-mm projects an angle of 214 mils. The 3-inch lens has a much narrower angle of projection — 98 mils. Because of the greater deflection capabilities of the lens, the 35-mm type is more widely used in fighter gunnery.

The film projectors in most film assessing rooms are placed at a distance from the screen to enable the 214-mil coverage of the lens to cover the linear distance of 21.4 inches from the top of the projected image to the bottom of the image on the screen. This distance between the screen and the projector is 44½ inches. The projector can be placed at any distance from the screen that is desired. As long as a measurement of the projected image is made on the screen and divided into the 214-mil angle of projection of the 35-mm lens to determine the mils per inch on the screen, the film assessing charts can accurately be constructed. The decision to place the projectors at 44½ inches from the screen is a matter of convenience, since at this distance 1 inch on the screen covers 10 mils of projection. This is a matter of simple proportion.

$$\frac{\text{214 mils (angular projection of lens)}}{\text{21.4 inches (actual measurement on screen)}} = \frac{\text{10 mils}}{\text{1 inch}}$$

Thus, the screen coverage of a 35-mm lens under these conditions (44½ inches from the screen) is said to be 10 mils per inch.

The method outlined below is applicable to the construction of film assessing charts for any type of target. Certain precautions which should be observed in this construction are mentioned.

However, the construction of charts on missions flown against target aircraft poses special measurement problems. Sample charts demonstrate measuring techniques with selected aircraft targets.

Digitized by Google

FILM ASSESSING CHART CONSTRUCTION

The following are the recommended steps for constructing any film assessing chart.

1. Draw a sketch of the target. A sketch of the target should be drawn on the worksheet as well as the finished assessing chart, listing the target dimensions. This can be used as a reference and guide both for constructing the chart and for actual film assessing.

2. Draw range line on the assessing chart. The target width is always used to determine range information. In the three illustrations above, 150 feet, 15 feet and 6 feet are the target widths. In air-to-ground gunnery this dimension is called the *major axis*. In air-to-air gunnery, this is also the ***height*** of the target.

   a. Decide on limits of charts and desired ranges. Analyzing the type of firing will indicate the ranges that are most applicable. In normal air-to-air firing, range lines for every 100 feet from the range of 200 feet up to 1,000 feet, and then each 200 feet on up to 2,000 feet will include those ranges within which accurate film assessing can be accomplished. Most air-to-ground charts run from 1,200 feet through 6,000 feet for high angle gunnery. Panel strafing charts normally include ranges of 500 feet and 2,000 feet. The determining factor for air-to-ground charts is the type of weapons used for firing.

   b. Arbitrarily establish a starting point. For air-to-air firing, the normal open fire range should be 1,000 feet. This figure, therefore, is an appropriate starting point for the construction of the range line for the film assessing charts.

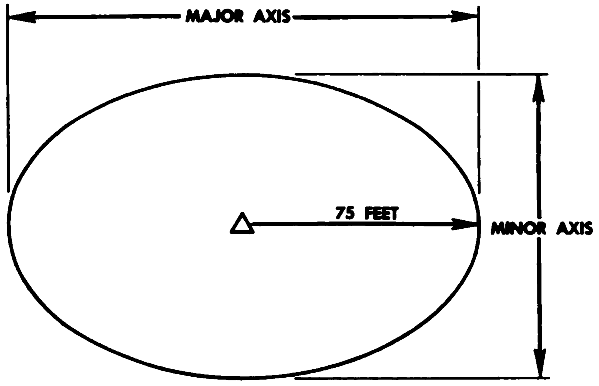

Dive Bombing, High Angle Strafing, and Rocketry Target

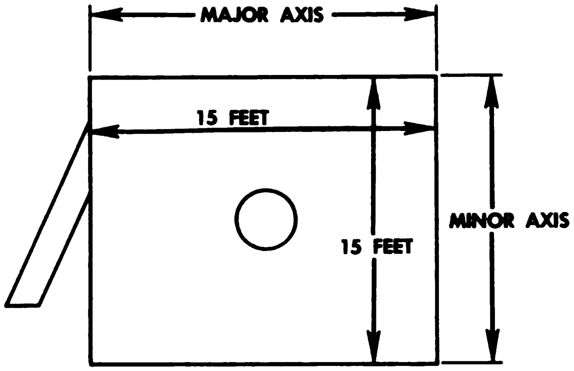

MAJOR AXIS = RANGE
MINOR AXIS = DIVE ANGLE

Long Angle Strafing Target

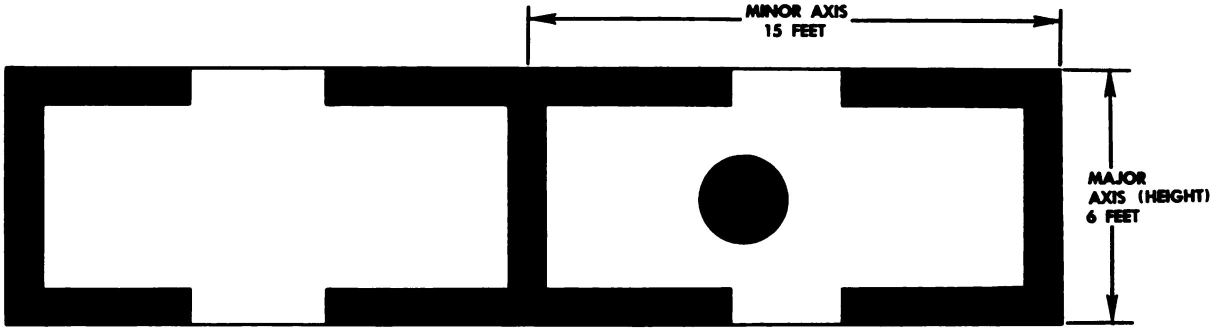

A-6B Polyethelene Target (Ground Measurements)

Digitized by Google

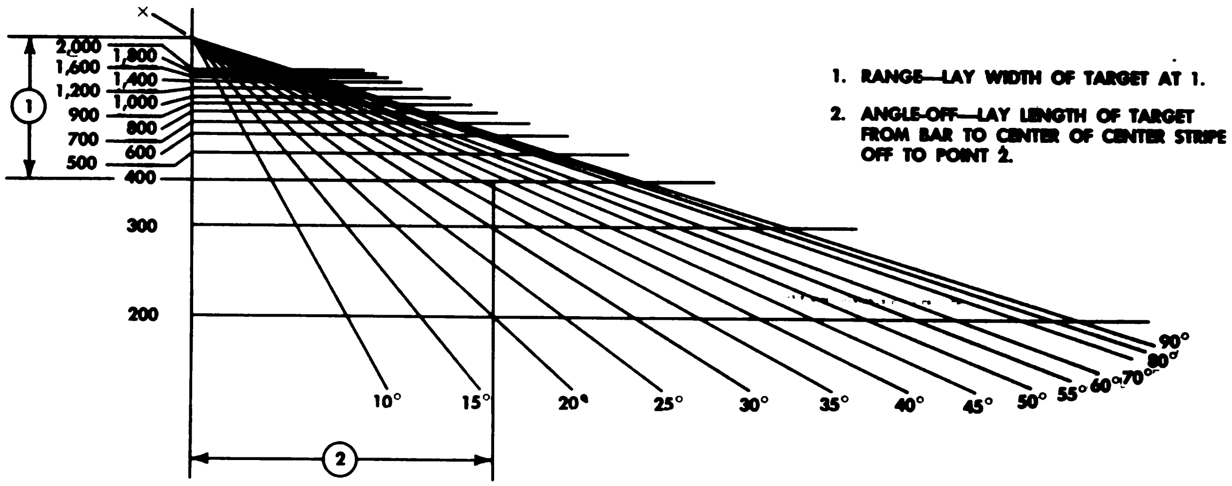

1. RANGE—LAY WIDTH OF TARGET AT 1.

2. ANGLE-OFF—LAY LENGTH OF TARGET FROM BAR TO CENTER OF CENTER STRIPE OFF TO POINT 2.

Air-to-Air Assessing Chart for 35-MM Lens A-6B Target

c. Draw a base line on the chart. The *base line* is the line on which the various ranges will be plotted. This is also referred to as the range line. This line shown in the sample chart above.

d. Determine target size in mils. To determine target size in mils, use this formula.

$$\frac{\text{Target dimension}\times 1{,}000}{\text{Range}}=\text{Target size in mils}$$

EXAMPLE

The width of a banner target is 6 feet.

$$\frac{6\text{ feet}\times 1{,}000}{1{,}000\text{ feet}}=-6\text{ mils}$$

e. Convert target dimension in mils to range line in inches. Previously, it was stated that 1 inch on the screen covered 10 mils. By applying this target size in mils to the screen coverage of 10 mils per inch, the range line in inches for 1,000 feet can be determined. The following formula is used to convert target dimension in mils to range line in inches.

$$\frac{\text{Target size in mils}}{\text{Mils per inch on screen}}=\text{Range line in inches}$$

EXAMPLE

Dimension for 6-foot target at 1,000 feet range is 6 mils.

$$\frac{6}{10}=0.6\text{ inch}=\frac{\text{Range line in inches for 6-foot}}{\text{target at 1,000 feet range}}$$

f. Plot ranges on base line. From the starting point on the base line or range line (the point from which all ranges are to be measured) measure down 0.6 inch and mark this point as the 1,000-foot range point. For ranges other than this original or starting range, range lines in inches can be plotted using inverse proportion to calculate the distance from the starting point. (Keep in mind that at greater ranges the target will produce a smaller image on the screen.) Use the following formula to compute the distances on the range line for ranges other than the original range.

$$\frac{\text{Original range}}{\text{New range}}=\frac{\text{New distance on range line}}{\text{Original distance on range line}}$$

EXAMPLE

Given a 6-foot target (width) at 1,000 feet range with the range line in inches of 0.6 inch. Find length of range line for 500-foot range.

$$\frac{1{,}000}{500}=\frac{X}{0.6}=5X=6.0$$

$$X=1.2\text{ inches}$$

3. Compute angular measurement for each range, angle-off, or dive angle, as the case may be.

a. Target length is used for the angular measurement as shown in sample shown on the previous page. This dimension of the target will be called the minor axis in the

Digitized by Google

air-to-ground high angle gunnery assessing charts.

b. Decide on limits and desired angles. The type of mission will be the guide for this decision. The recommended angles are, each 5° angle up to 60° and then each 10° angle on up to 90°.

c. Use 90° as a starting point for computing angular measurement. At 90° from any target, the target presentation is complete. For any angle other than this, the complete target will not be visible to the viewer.

d. Determine target size in mils. For computing this figure the same formula is used that was used for computing the size for range purposes, except that the length of the target is used as the target dimension.

Example

The length of a banner target is 30 feet.

$$\frac{30 \times 1{,}000}{1{,}000} = 30 \text{ mils}$$

Note: This is a hypothetical example.

Due to the fraying of the end of banner targets, the film assessing charts are based on measurement of target length from the front of the target to the center stripe. Thus, a polyethyelene target length is considered to be 17 feet. This is why the standard air-to-air film assessing procedure is to measure target length from the front of the target to the *center* stripe.

e. Compute angular measurement. This measurement will be plotted at a perpendicular to the range line. For determining the distance over from the range line for any angle, use the formula:

$$\frac{\text{Target size in mils} \times \text{sine of the angle}}{\text{Mils per inch on the screen}}$$

Example

The previously computed dimensions are substituted in the angular measurement formula.

$$90^\circ = \frac{30 \times 1{,}000}{10} = 3 \text{ inches}$$

At the 1,000-foot range line, measure over 3 inches and mark this point as the 90° angle point.

f. Compute other angles as this same range. To determine the distance in inches for each angle at the same range, use this formula:

Original distance × sine of new angle

Example

Using the figure computed on the previous example, determine the distance over from the 1,000-foot range point for the 30° plot.

90° point $= 3$ inches

Sine of $30^\circ = 0.5000$

$3 \times 0.5000 = 1.5$ inches

g. Reverting to the range line formula, compute various ranges at the same angle. This step entails the use of inverse proportion, because at greater ranges the target image will be smaller.

$$\frac{\text{Original range}}{\text{New range}} = \frac{\text{New distance}}{\text{Original distance}}$$

h. Check for accuracy. By connecting the plots of various angles with the range line index or starting point, a straight line should result for each angle. It is recommended that angle measurements be determined for at least three different ranges to preclude the possibility of erroneous computations.

PRECAUTIONS IN CHART CONSTRUCTION

These two precautions should be observed in the construction of a film assessing chart.

Title the Chart

Each type of target has its own film assessing chart. Charts used for assessing gunnery film used in air-to-ground gunnery cannot be used for assessing air-to-air gunnery film. To avoid improper use, therefore, title all charts properly with a description of the target to which they apply.

Use Actual Target Measurement

Actual target measurement must be used. When constructing film assessing charts, remember that the airborne measurement of the target is of prime consideration. Temperature and altitude affect the length and width of the polyethylene target as it is being towed at altitude. In discussion of tow targets this is sometimes referred to as "two-way

Digitized by Google

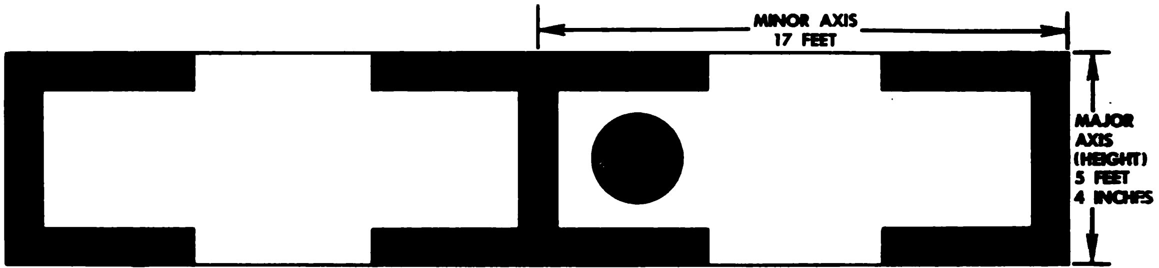

The minor axis is 17 feet when the target is being towed at 30,000 feet because of the stretch of the polyethelene target. This will also cause the major axis (height) to be reduced to 5 feet, 4 inches.

A-6B Polyethelene Target at 30,000 Feet

stretch." The illustration above shows the actual measurements of the polyethyelene target at 30,000 feet are approximately 34 feet by 5 feet 4 inches. As shown in the illustration on the previous page, the measurements on the ground of this same target are 30 feet by 6 feet. For air-to-ground charts the width of the target is used for range information — whether the target is the 150-foot circle used in high angle or the panel target used in low angle strafing. Air-to-air and air-to- ground targets are illustrated on the previous page.

Using actual aircraft as gun-camera targets poses another measurement problem. The solution of this problem is discussed in the following section.

CHARTS FOR FIGHTER-VERSUS-AIRCRAFT MISSIONS

Film assessing charts can be constructed for fighter-versus-fighter and fighter-versus-bomber missions. When constructing such a chart, run the film until the opening frame of the gunnery pass appears. Using calipers as shown in the diagram below, measure the width of the target image at the recommended location on the airframe of the aircraft used as a target. Then lay this distance off down the vertical axis.

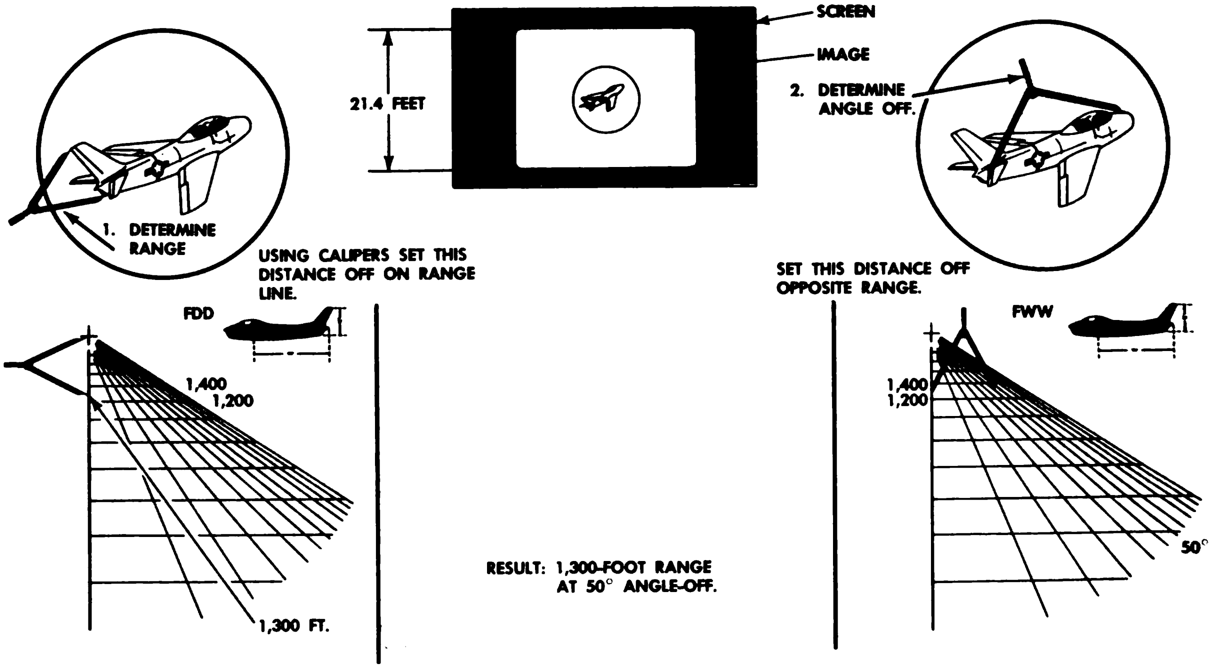

USING CALIPERS SET THIS DISTANCE OFF ON RANGE LINE.

SET THIS DISTANCE OFF OPPOSITE RANGE.

RESULT: 1,300-FOOT RANGE AT 50° ANGLE-OFF.

Film Assessment, Fighter-versus-Aircraft Missions

Digitized by Google

The angular measurement, which determines the vertical component of the chart, is found by measuring a certain portion of fuselage length (depending upon the type of target aircraft).

The locations on the airframe where these measurements should be taken are given below for fighter and bomber aircraft targets. Aside from special techniques in determining dimensions for range and angle-off information, the method of chart construction for fighter-versus aircraft missions in the same as the one outlined previously in this appendix.

Fighter-versus-Fighter Missions

When film assessing charts are constructed from fighter-versus-fighter missions, the vertical stabilizer is used as the target dimension for range information. For angle-off measurement, the dimension of a given portion of fuselage length is the appropriate target length. The size of the portion used as a criterion depends upon the type of fighter being photographed. For instance, the sample chart below gives the appropriate dimensions for use with F-86 aircraft.

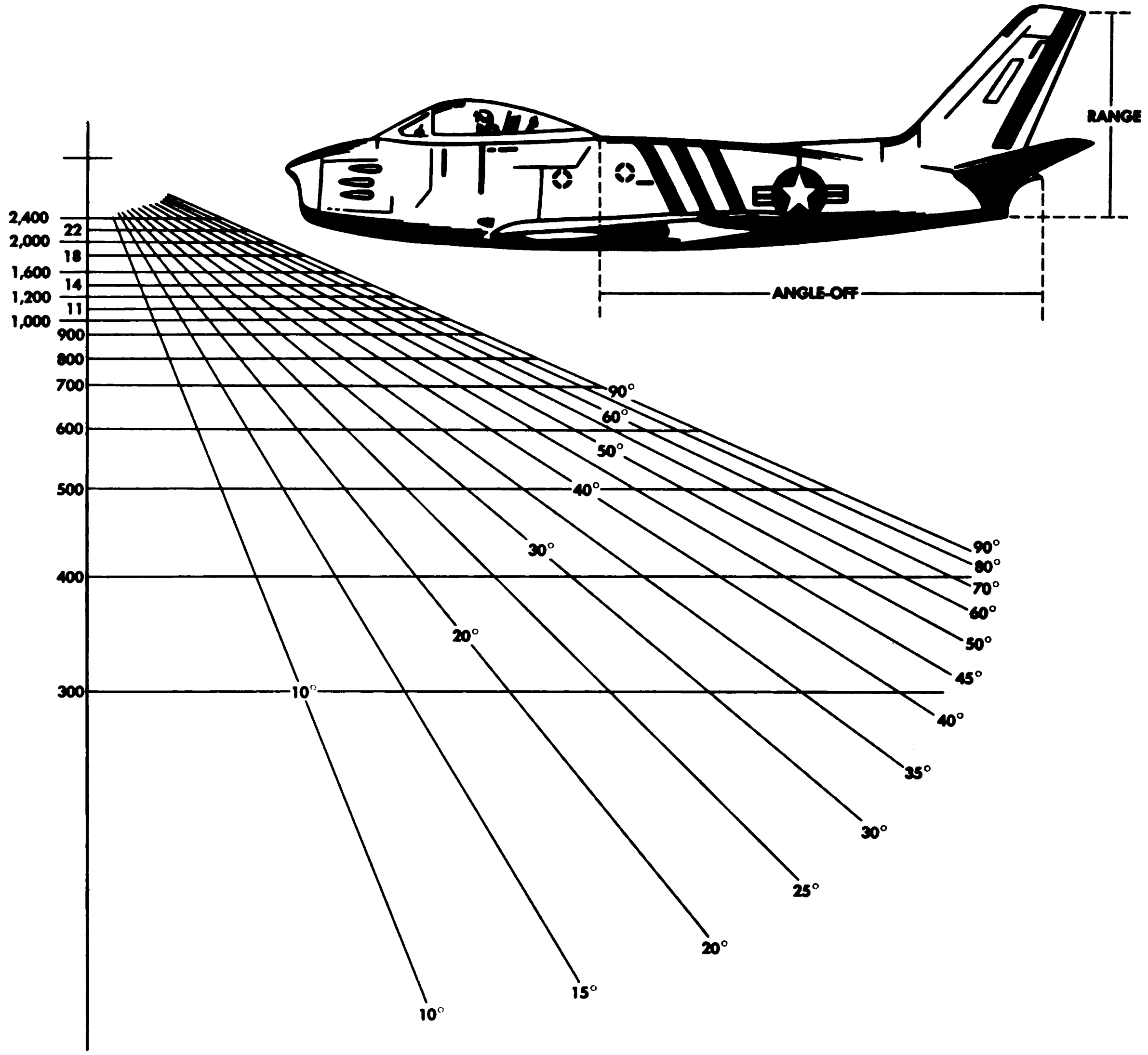

Air-to-Air Estimate Assessing Chart for 35-mm Lens, F-86 Aircraft

Digitized by Google

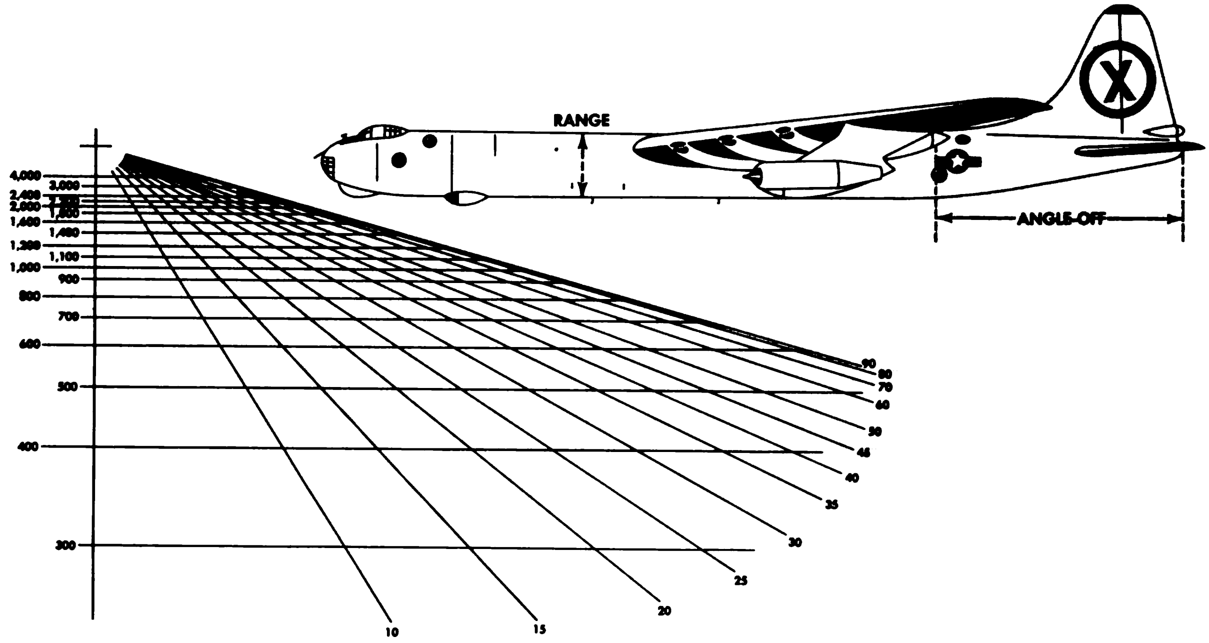

Air-to-Air Estimate Assessing Chart for 35-mm Lens, B-36 Aircraft

Fighter-versus-Bomber Missions

A prescribed portion of fuselage length is also used as a dimension for angular measurement when constructing charts on fighter-versus-bomber missions. However, with bombers, the fuselage diameter is a satisfactory range index.

The two sample charts on this page were drawn up from data on missions flown against B-36 and B-47 aircraft.

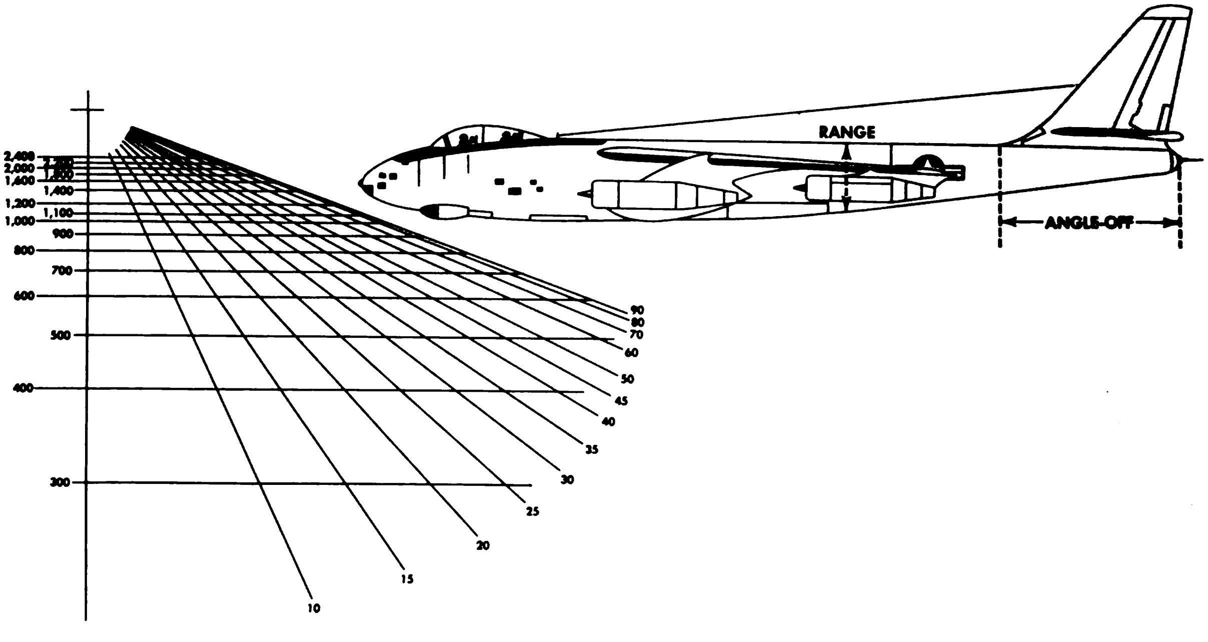

Air-to-Air Estimate Assessing Chart for 35-mm Lens, B-47 Aircraft

Digitized by Google

appendix IX

TARGET TOW LATCH INSTALLATION

This appendix contains pictures, diagrams, and instructions concerning the fabrication of several varieties of target towing apparatus and the installation of this equipment on three general types of tow aircraft: the T-33, the F-84G, and the F-86 series.

Takeoff and flight procedures with most of these aircraft are outlined in AFM 51-8, Tow Target Techniques and Procedures. However, bomb shackle tow with the F-86G is not treated in that manual. Therefore, it is described in the section on tow bar installation for the F-86G.

NOTE: The special tow target terms used in this appendix are defined in the general glossary, appendix XII.

T-33 TOW LATCHES

Information concerning the fabrication, installation, and operation of the two types of tow latches used with T-33's is contained in this section.

Pinecastle Type

FABRICATION. Detailed diagrams for the construction of the Pinecastle tow latch are given on the following pages.

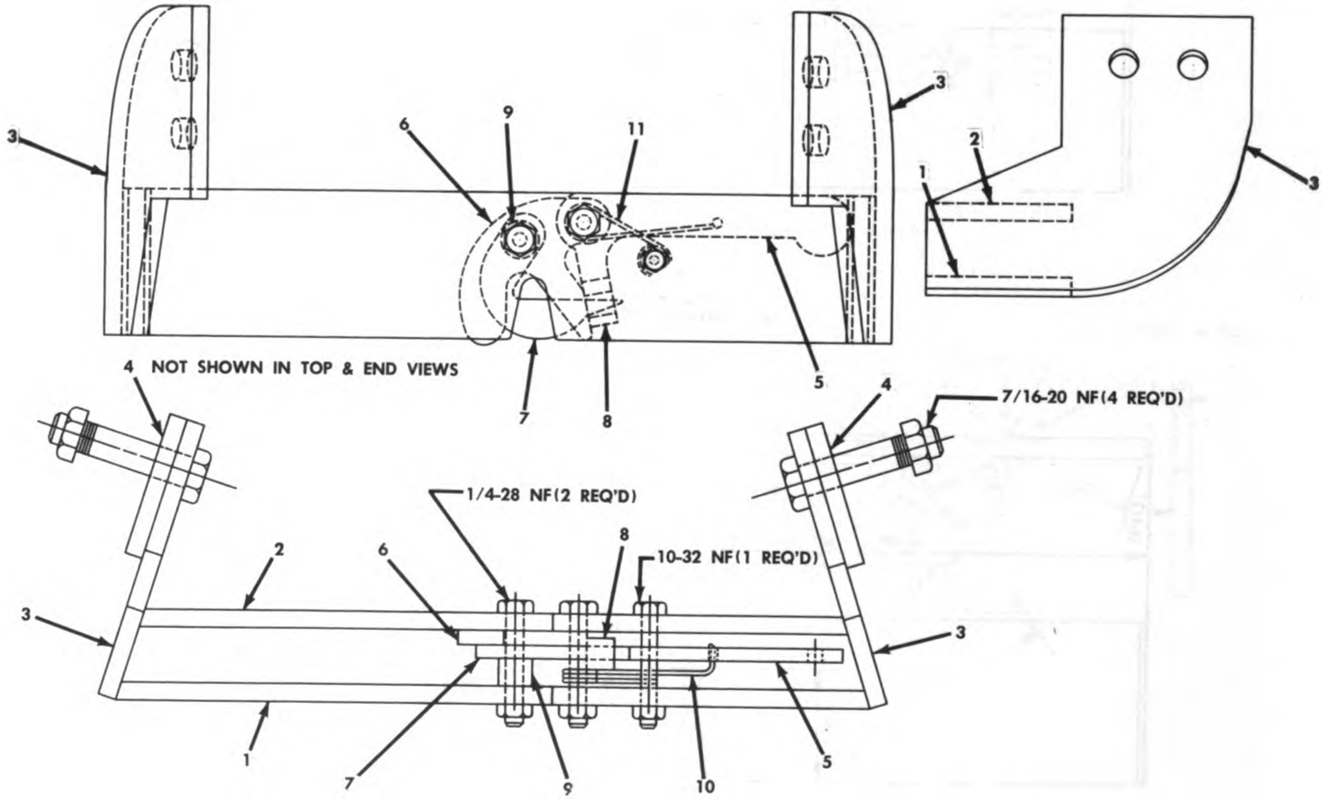

Pinecastle Tow Latch

Digitized by Google

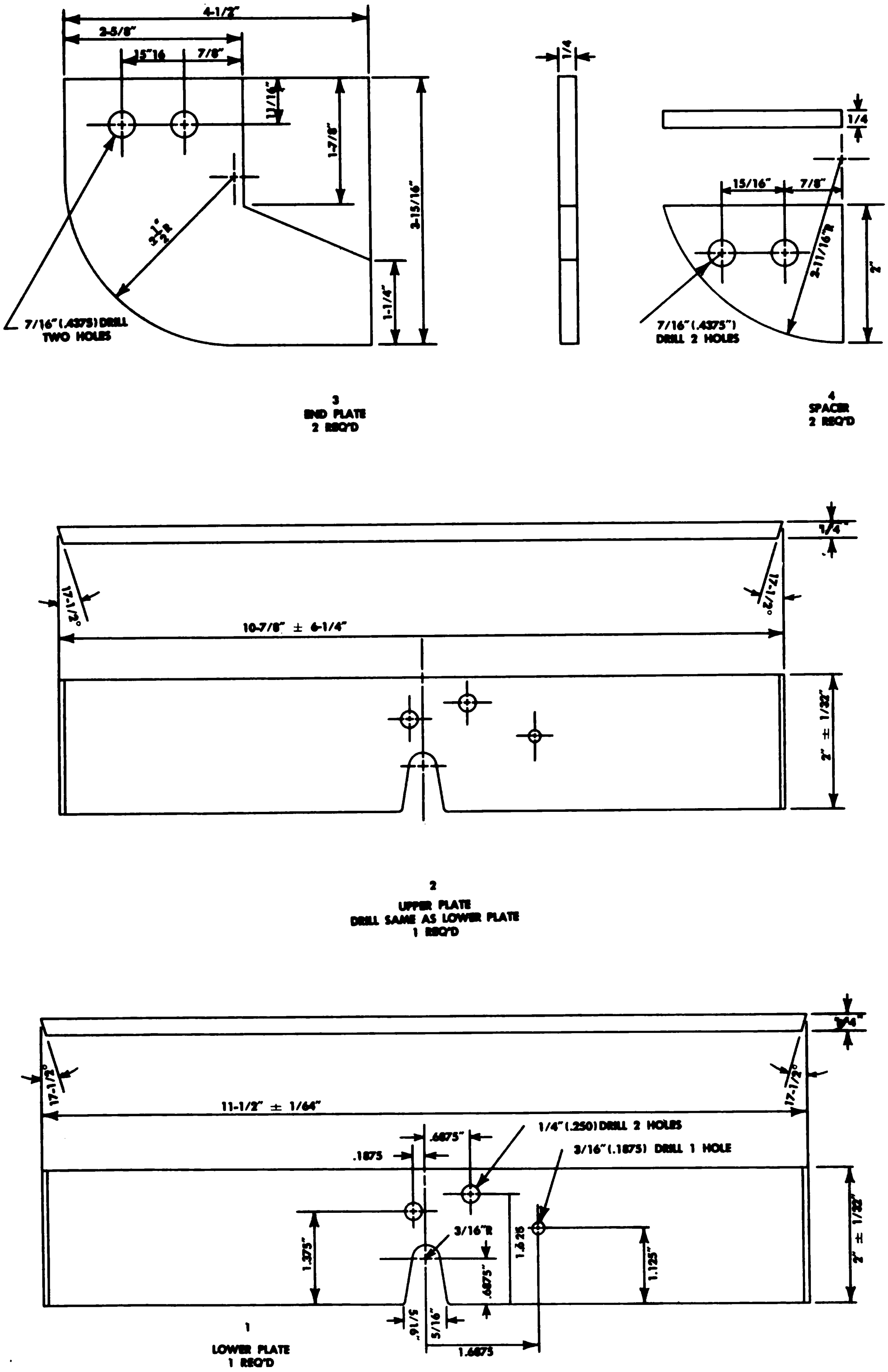

Pinecastle Tow Latch

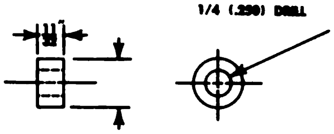

9
SPACER
1 REQ'D

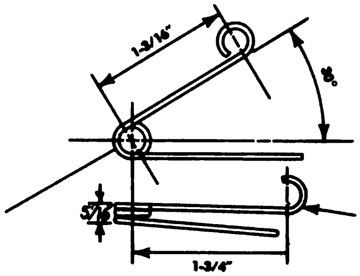

10
SPRING
1 REQ'D

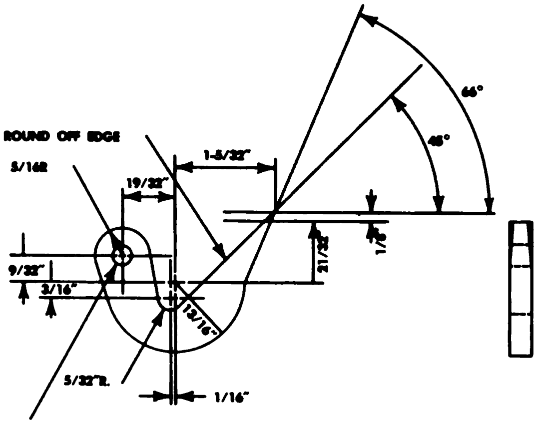

7
LATCH
1 REQ'D

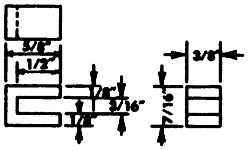

8
1 REQ'D

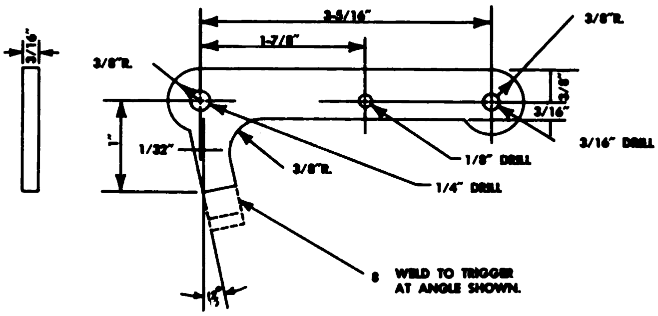

5
TRIGGER
(1 REQ'D)

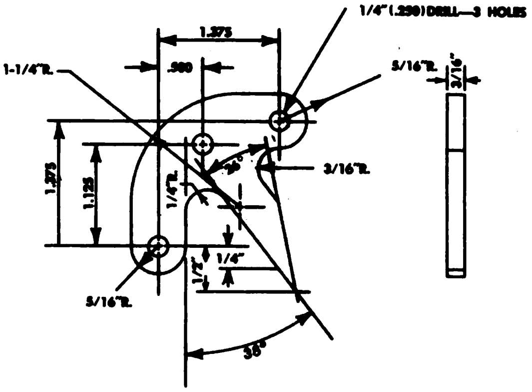

6
STOP
1 REQ'D

Pinecastle Tow Latch Details

INSTALLATION. Install the tow target latch between the two inside JATO hooks by two ⅜-inch bolts on each hook as shown in the two views below. Disconnect the right JATO release cable. Drill a small hole approximately 6 inches from right JATO mount to permit passage of release cable.

The release cable varies from 12 to 15 inches in length. One end of the cable is attached to the disconnected right JATO release and the other end to the tow latch release.

CABLE HOOKUP. Hook the ring on tow cable over trigger and close trigger latch over trigger.

TARGET DROP. Pull the JATO manual release handle.

EMERGENCY PROCEDURES. Pull sharply on the JATO manual release handle. If target will not release, land with target.

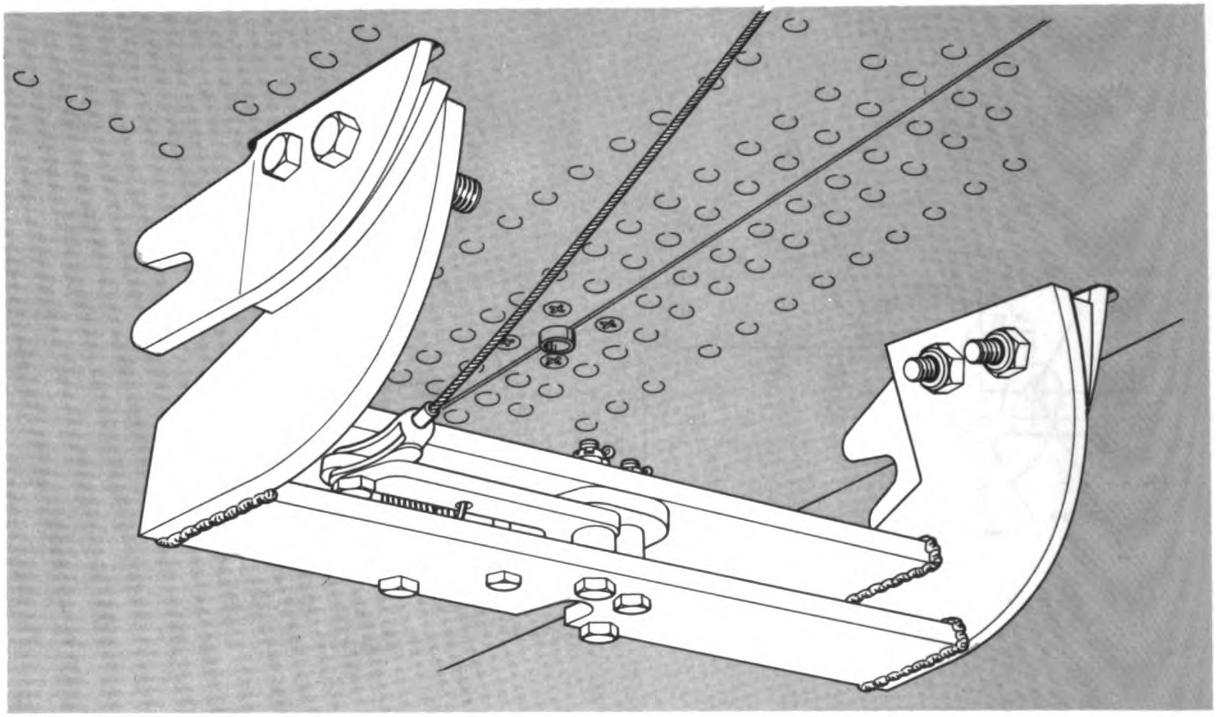

Front View

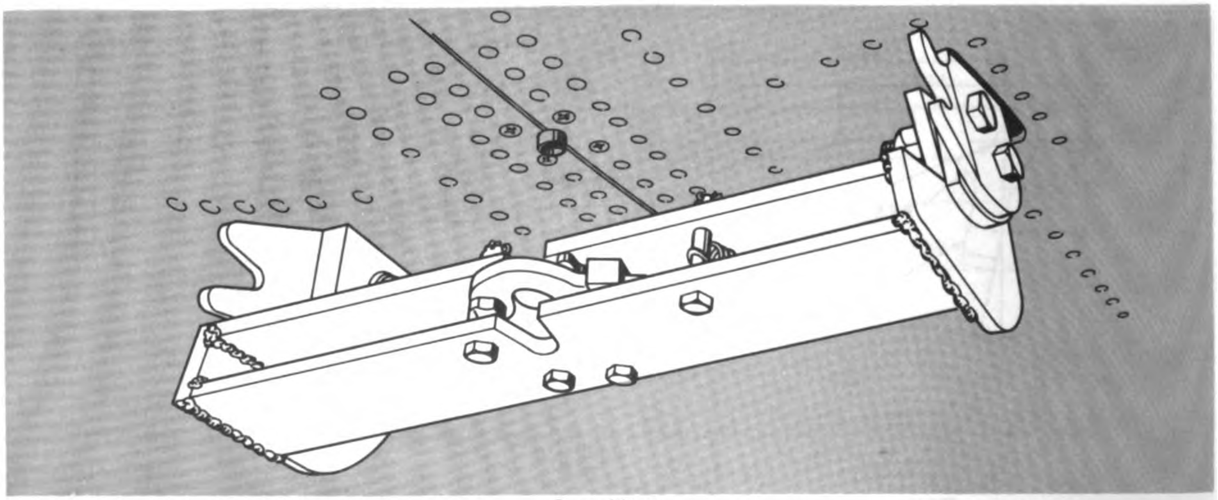

Rear View

Pinecastle Tow Latch Installed

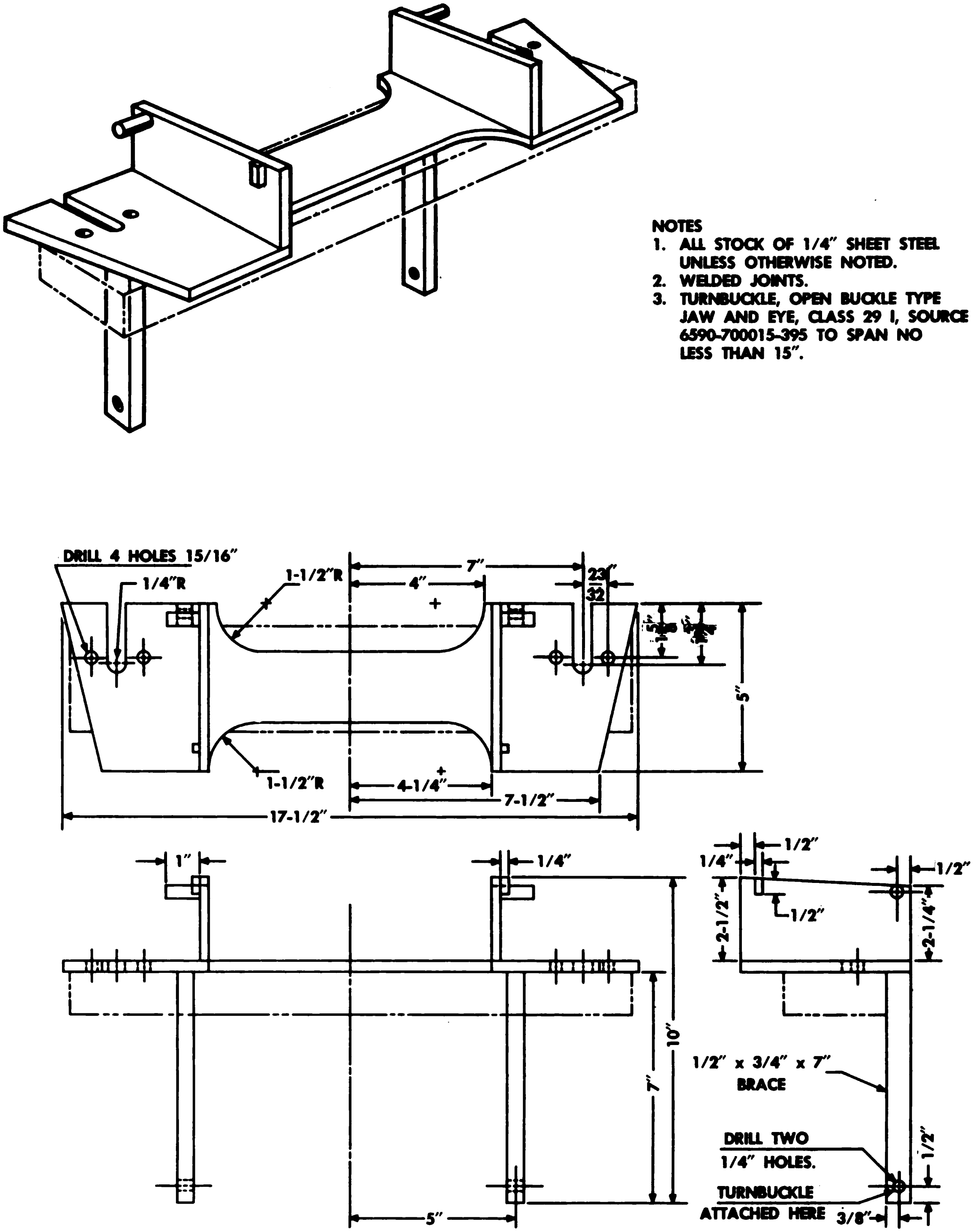

NOTES
1. ALL STOCK OF 1/4" SHEET STEEL UNLESS OTHERWISE NOTED.
2. WELDED JOINTS.
3. TURNBUCKLE, OPEN BUCKLE TYPE JAW AND EYE, CLASS 29 I, SOURCE 6590-700015-395 TO SPAN NO LESS THAN 15".

Yuma Tow Latch — Perspective, Top, Side and End Views

Yuma Type

FABRICATION. Detailed diagrams for the construction of the Yuma tow latch are given above.

INSTALLATION. Place the assembly parallel to ground with shackle hooks to the rear of the aircraft, then insert lugs into slots of rear inside pair of JATO hooks. Pull the turnbuckles forward and insert eyes in the JATO releases and rotate release lugs down thereby locking them. After the lugs are locked, tighten and safety turnbuckles. Finally attach the electrical release circuit of the bomb shackle to either JATO firing connection. The installed tow latch is shown in the two pictures on this page.

Cable hookup. A piece of cable approximately 3 feet long is inserted through the tow ring on the tow cable in the manner shown in

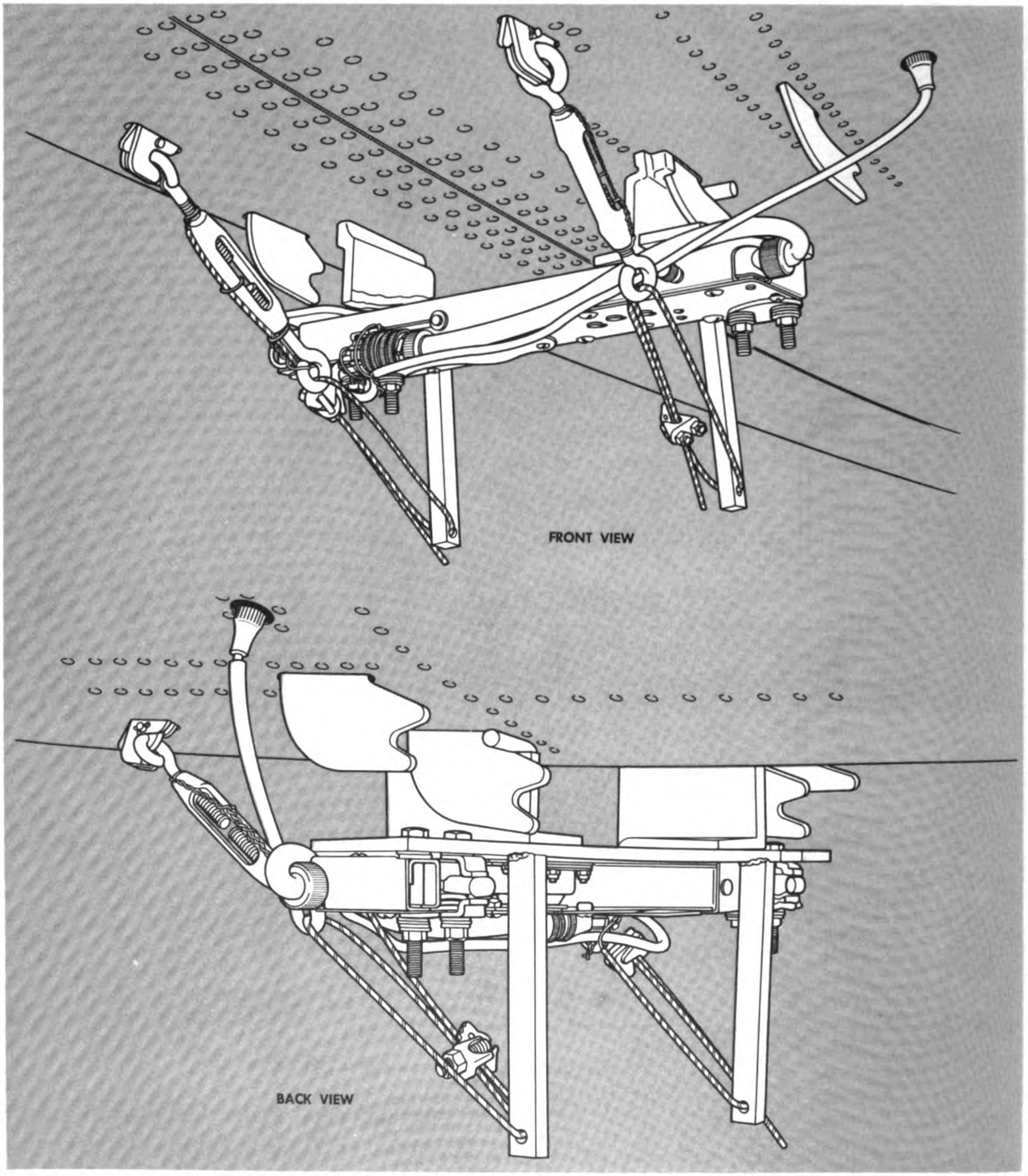

Yuma Tow Latch Installed

Digitized by Google

the illustration below. This short cable, in turn, will have a ring on either end.

For the actual hookup, insert the two rings of the hookup cable in the lugs of the bomb rack, and cock the rack.

Dropping the cable. Depress the JATO firing button, which actuates the release circuit of the bomb shackle.

Emergency procedures. Pull the JATO manual release handle in the event of circuit failure in the bomb shackle or other electrical difficulties. This will release the entire tow latch assembly with the cable.

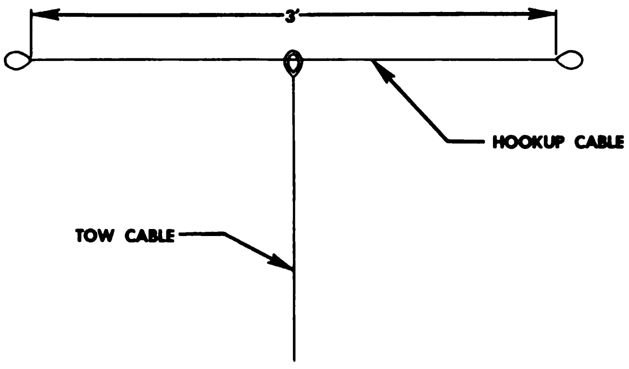

Cable Hook up for T-33 Tow

F-84G TOW BAR INSTALLATION AND FLIGHT PROCEDURES

Fabrication

The tow rig used on the pylon of F-84G aircraft can be manufactured locally. Simple in design, it accomplishes the sole purpose of affording vertical clearance of the target tow cable and the underside of the tow aircraft.

The rig assembly shown in the illustration below is made of ⅞-inch steel pipe, welded together. The four legs by which the tow bar is attached to the pylon are 20 inches in length. The circular base of the rig, through which the cable passes from its point of attachment in the pylon, is 6 inches in diameter. The entire rig weighs approximately 7½ pounds.

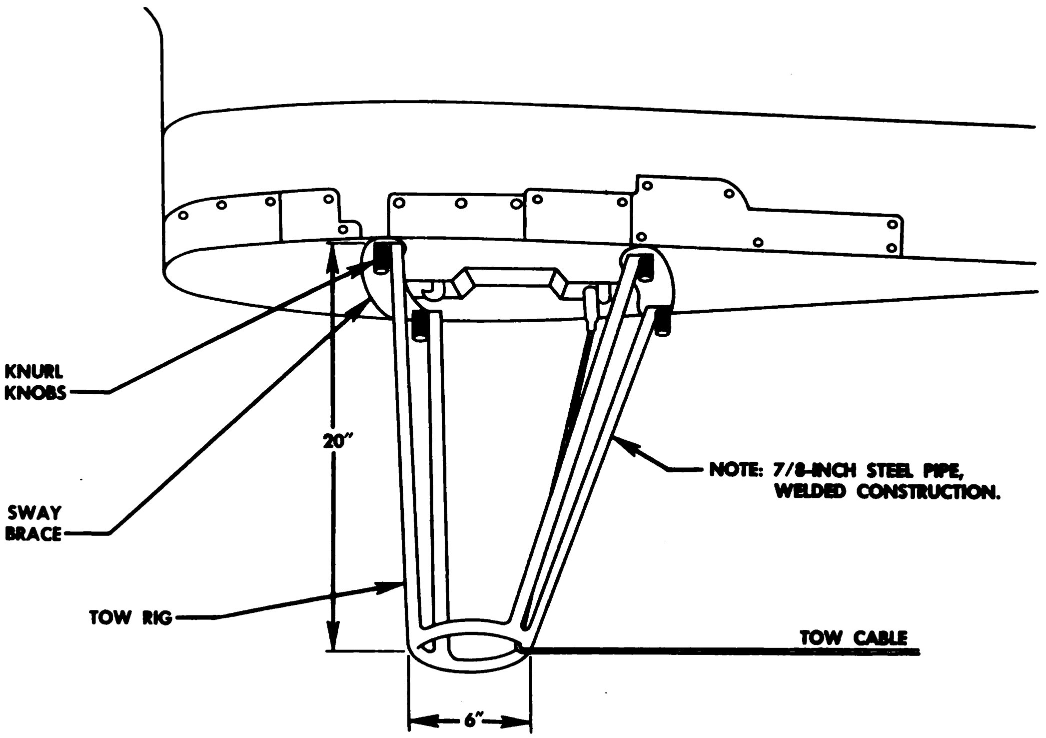

Tow Rack Installation F-84G

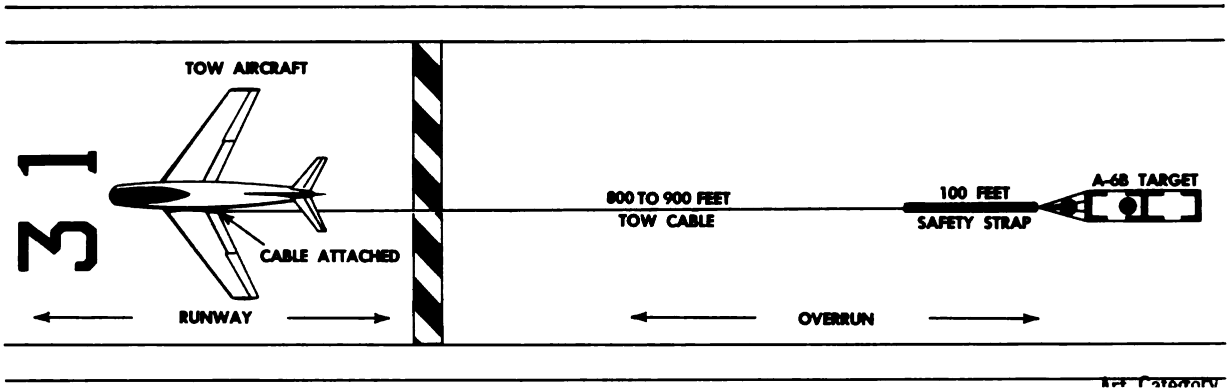

Tow Target Hookup Diagram

Installation

Attach tow bar to the S-2 bomb rack by means of the holes located in the ends of each of the four legs. These legs bolt onto the bomb rack with knurl knobs in the manner pictured above. Normally, the tow bar assembly is hung from the left bomb rack. However, if the aircraft is equipped with a special pylon on the left side, mount the assembly on the right hand bomb rack.

Cable Hookup

Before hookup the tow target and cable are stretched out on the runway overrun, if available. (See tow target hookup diagram above.) If the overrun is not available, use approximately the first 1,000 feet of the runway unless the runway approach terrain is exceptionally smooth and hard and the dropoff at the end of the runway is very slight, thereby preventing the moving target from being snagged. If a cross wind exists, place target and cable approximately 25 feet from the up-wind edge of the runway.

The ring on the end of the tow cable is strung through the circular base of the rig and up to the S-2 bomb rack shackle. There it is attached to the rear hook of the bomb shackle, and the shackle is cocked.

Flight Procedure

TAKEOFF AND CLIMB. Use normal takeoff flap settings of 20° on takeoff. When airborne, hold a slightly steeper than normal rate of climb with 160 m.p.h. indicated airspeed. This will somewhat reduce the distance the target will drag on the runway before becoming airborne. Release switches should be kept on until approximately 4,000 feet of altitude is attained, in the event of an emergency. After an altitude of 4,000 feet is reached, turn off the target release switches to avoid the possibility of the target being inadvertently dropped during flight.

IN FLIGHT. After takeoff has been accomplished and the desired altitude reached, tow the A-6B polyethylene target at no more than 190 m.p.h. Turnaround is always made in the direction to which the tow cable is attached to avoid the possibilities of the cable contacting the fuselage.

Letdown and Release

Upon reaching the letdown point, power is reduced to approximately 70%, speed brakes are extended, and descent is begun. Approximately 2,000 feet per minute rate of descent will result in 190 m.p.h. indicated airspeed, which should not be exceeded to avoid undue strain and possible shearing of the cable. Approach the drop zone at approximately 400 feet of altitude at the indicated tow airspeed. Upon turning onto the approach, position the normal bomb system switches in the following manner.

1. Set auxiliary bomb switch on OFF.
2. Set bomb release selector switch to MANUAL RELEASE.
3. Set DEMO bomb switch to SINGLE.
4. Depressing the bomb release button on the stick will release the target when it has been installed on the left pylon. Two depressions are necessary for release if the cable has been attached to the right pylon.

Digitized by Google

Emergency Procedure

If the target does not release after depressing the bomb release button, recheck the bomb switches and circuit breakers and depress the button several more times. If target still fails to release, put DEMO switch to ALL and then depress bomb switch.

After all attempts to release the target have failed, and a landing with the target attached is inevitable, exercise caution in accomplishing the landing. Make a steeper than normal approach to the runway with the point of touchdown approximately 1,000 feet down if runway length permits. Wind permitting, the landing should be in the direction where the approach is clear.

F-86 SERIES TOW BAR

Two types of tow bars are used for bomb shackle tow with aircraft of the F-86 series. A simple tow bar of steel rod construction is used with the F-86A and F-86E, while the tow rig used with the F-86F is a modified napalm displacing strut.

Takeoff and flight procedures used for bomb-shackle towing with aircraft of this series are outlined in AFM 51-8, Aerial Target Techniques and Procedures.

F-86A and F-86E Tow Bar

Fabrication. This bomb-rack tow bar is constructed of ⅞-inch steel rod in accordance with the accompanying diagram.

Installation. Remove sway braces from type S-2 bomb rack and place tow bar in sway brace holes. Secure tow bar in position by tightening sway brace lock screws. The picture below shows the tow bar installed on the S-2 bomb rack.

Cable hookup. Run tow cable through

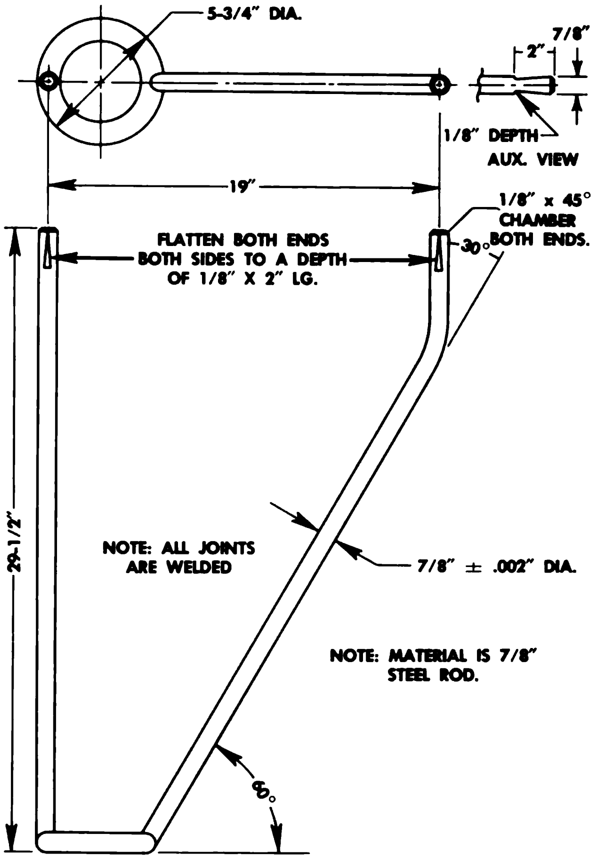

F-86A and F-86E Tow Bar

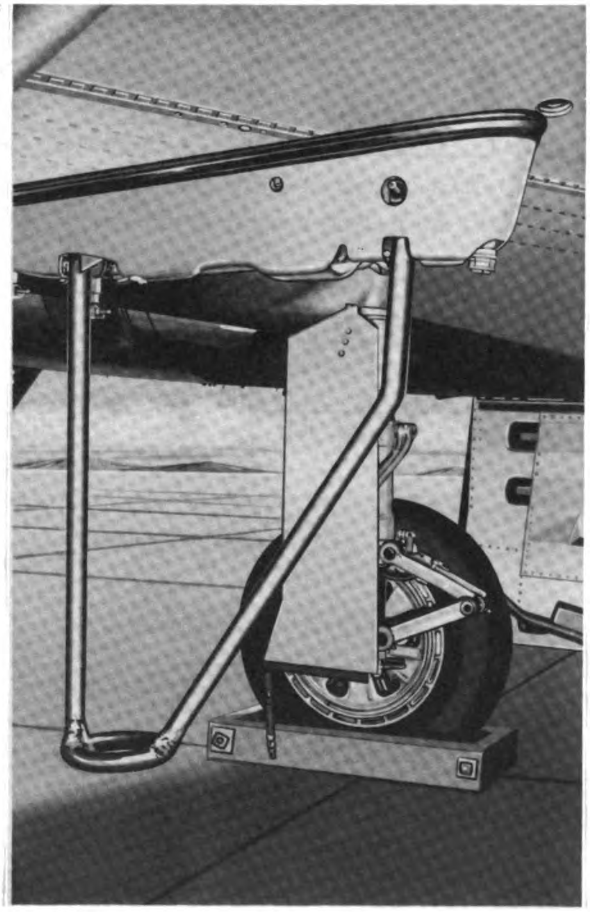

F-86A and F-86E Tow Bar Installed

Digitized by Google

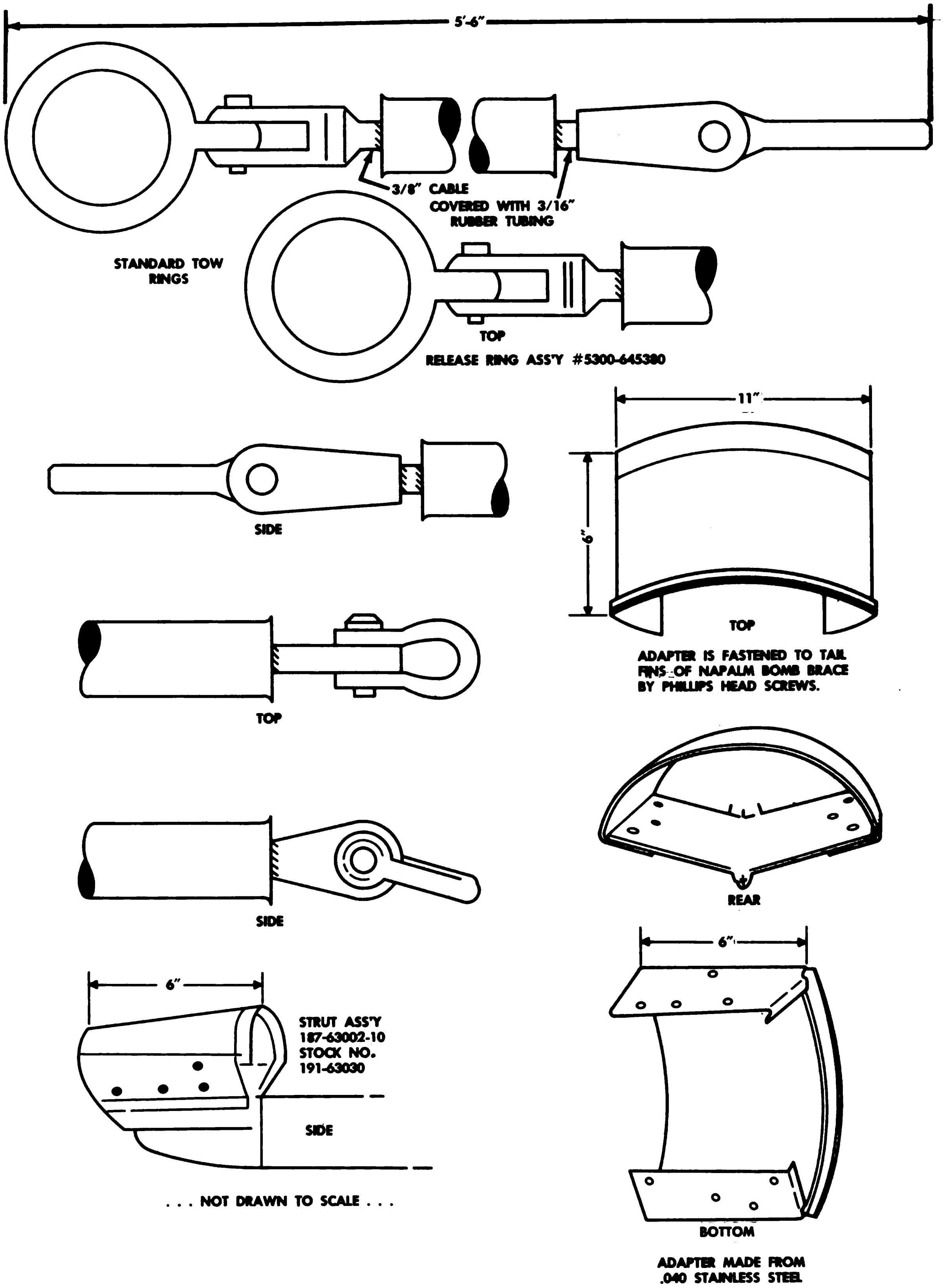

F-86 Bomb Shackle Tow Rig

Digitized by Google

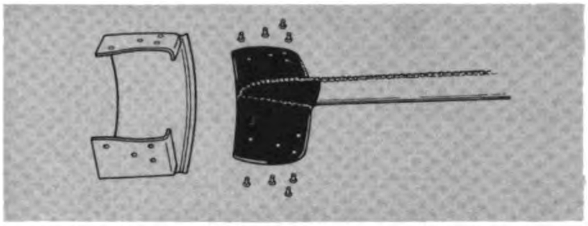

Adapter Removed from Tail Fin

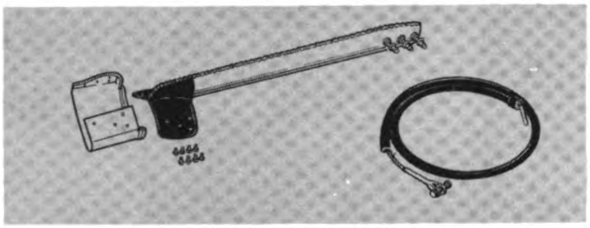

Parts of the Tow Rig

tow bar and insert the ring on end of tow cable into rear hook of bomb shackle and cock bomb shackle.

DROPPING CABLE.

1. Set bomb release selector switch to MANUAL RELEASE.
2. Set DEMO bomb switch to ALL.
3. Press bomb release button on stick.

NOTE: The recommended release speed is 150 knots (173 m.p.h.) IAS maximum.

EMERGENCY PROCEDURE. If target does not release, push salvo button. On the next release attempt, pull manual jettison handle. If target will not then release, land with target.

F-86F (S-2A) Tow Bar

FABRICATION. This tow bar is adapted from a napalm bomb displacing strut. Special adaptation details are shown in the diagrams and pictures on this page.

INSTALLATION. Mount the napalm displacing strut (263 equipment) on the S-2A bomb rack assembly. On the aft end of the strut attach a 0.040 stainless steel guide with four screws on each side. This guide should be 6 inches wide and approximately 17 inches long. (The length of the guide strip depends upon the amount of overlapping used.) The leader cable is 5½ feet long with a ring on one end and a fork terminal on the other. A rubber hose covers the leader cable. This hose prevents fouling of the cable when the target is dropped and prevents excessive wear on the guide.

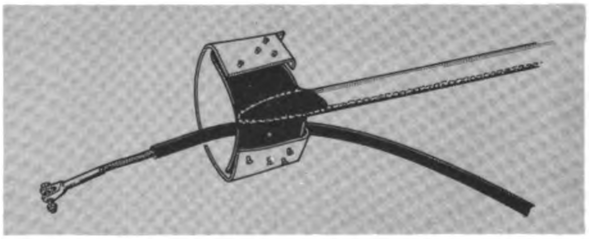

Assembled Tow Rig and Cable

CABLE HOOKUP. Run leader cable through guide in the manner shown in the picture below, and insert the ring on leader cable into rear hook of bomb shackle and cock the rack. Do this prior to taxiing.

After the aircraft is lined up on runway, insert ring on end of tow cable into fork terminal on end of leader cable and secure tow cable with a bolt running through fork terminal.

DROPPING CABLE.

1. Set bomb release selector switch to MANUAL RELEASE.
2. Set DEMO bomb switch to ALL.
3. Press bomb release button on stick.

NOTE: The recommended release speed is 150 knots (173 m.p.h.) IAS maximum.

EMERGENCY PROCEDURES. If target does not release, push salvo button. On the next release attempt pull manual jettison handle. If target will not then release, land with target.

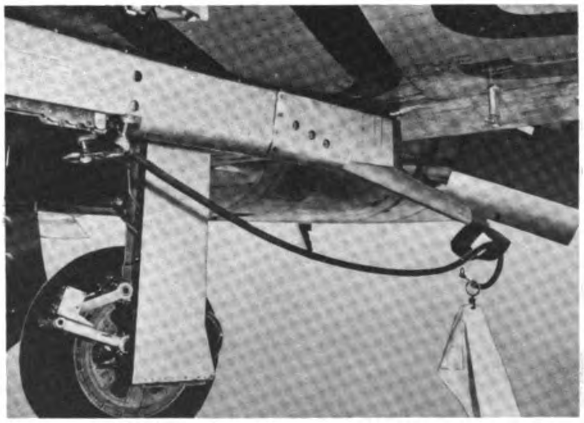

F-86F Tow Bar Installed

Digitized by Google

appendix X

RADAR REFLECTOR, M-10

The M-10 radar reflector was formerly called the Anning radar reflector for the designer, Captain Anning. The original type was made from four ammunition cans as shown below.

A quicker and more economical method of fabrication is to use. 025 galvanized sheet iron. The reflector then looks like the one shown on the next page.

FABRICATION

The M-10 is manufactured in five parts — the single sheet of metal comprising the face and vertical fins, the two horizontal fins, and the two skids. The horizontal fins are riveted to the main piece to comprise the first assembly. The two skids are then bolted to the face to finish the reflector unit. The construction details are shown on next page.

The skids are manufactured from 1/8" x 1 1/2" straps of mild cold-rolled steel. They serve two purposes. Primarily, they support the reflector off the runway during drag takeoff and minimize wear on the soft sheet metal. Secondarily, they serve as reinforcement for the face of the reflector, retaining it in its original shape during ground handling and dropping. If reuse of the reflector is not an important factor, a single skid across the vertical center of the face is adequate.

NOTE: Experiments are currently being conducted at the USAF Fighter Weapons School, Nellis Air Force Base, Nevada, to determine the effect of bow angle of the reflector upon frontal drag. If it is found that pointing the bow more reduces drag appreciably, the design of the reflector will be altered. There will be no change in face dimensions other than slightly longer sides, but the bow angle will be reduced from the present 120° to 90°.

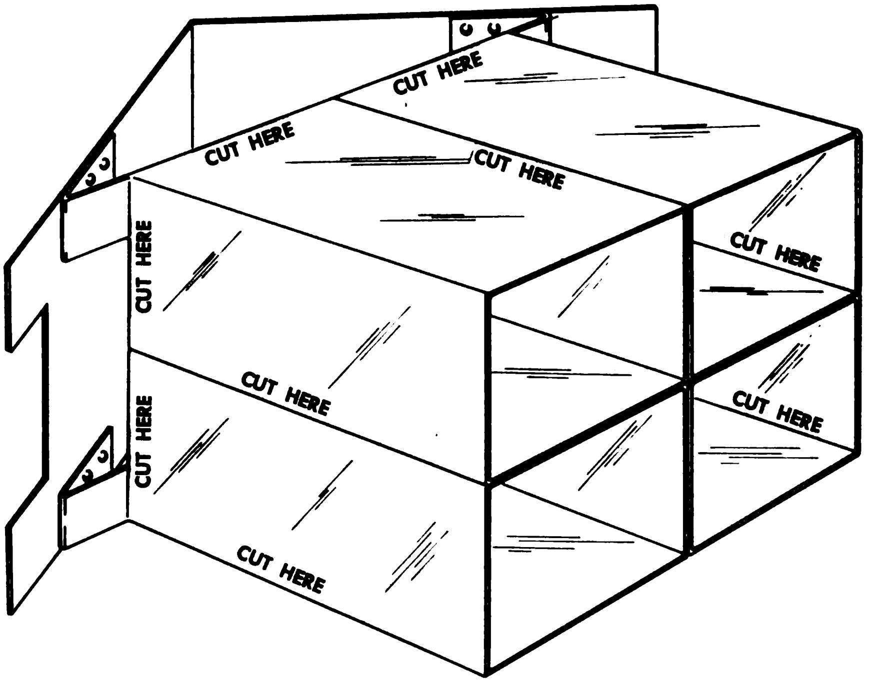

M-10 Radar Reflector Made from Ammunition Cans

Digitized by Google

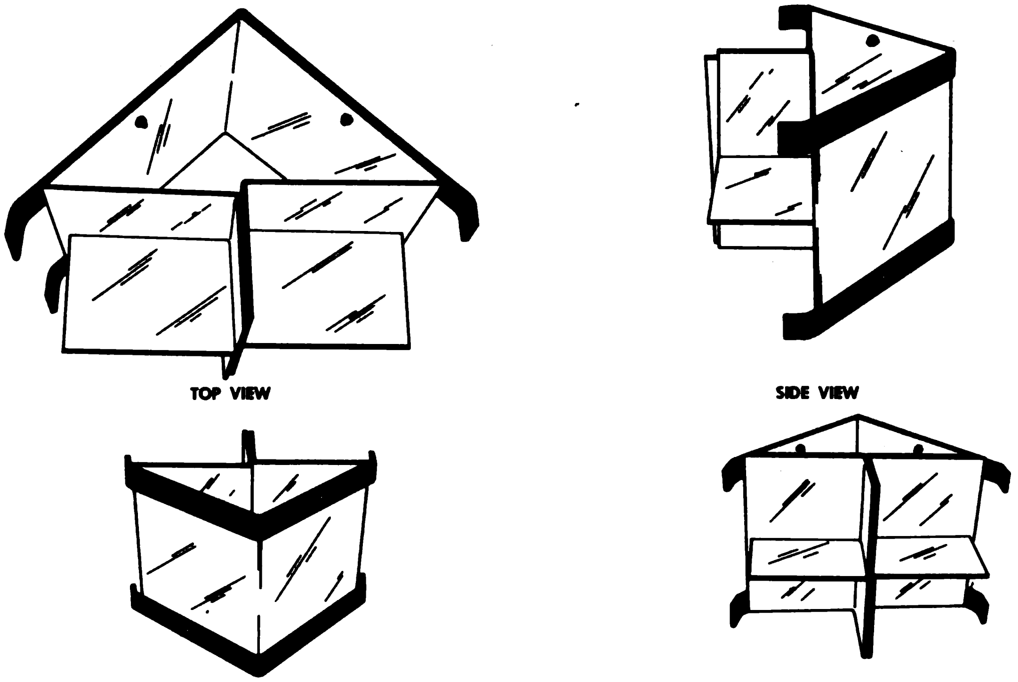

TOP VIEW

SIDE VIEW

FRONT VIEW

REAR VIEW

M-10 Radar Reflector Made from Sheet Iron

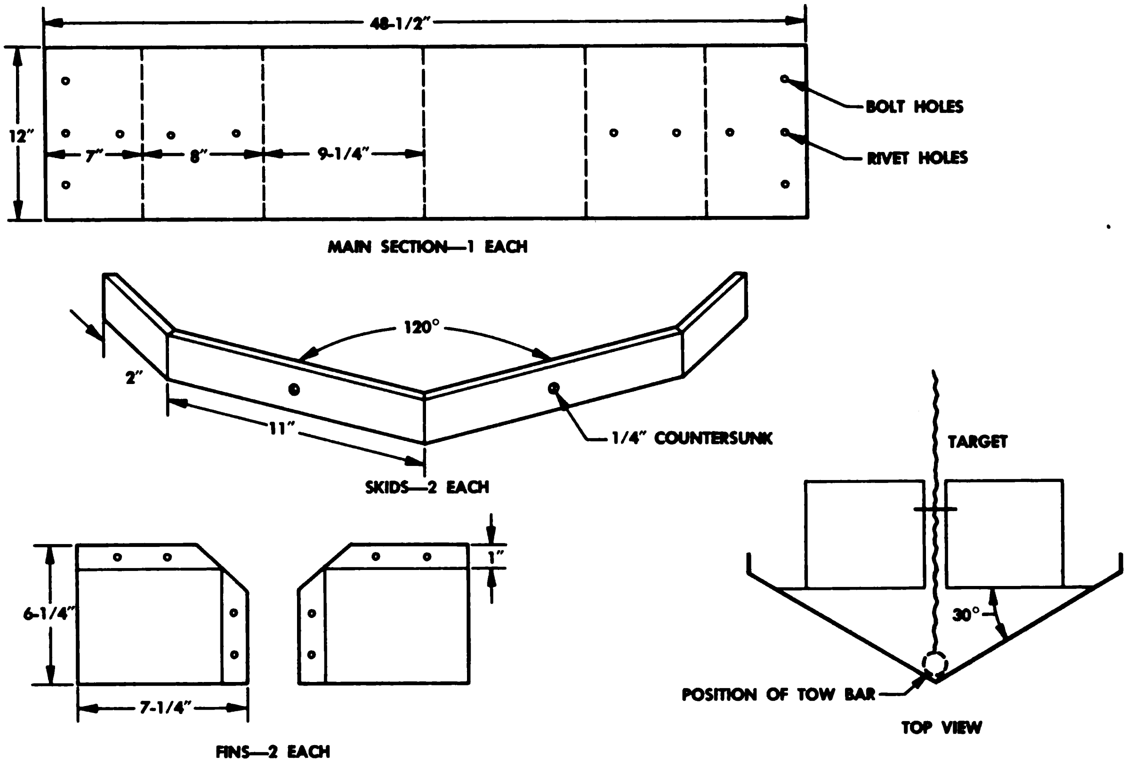

Patterns for Construction of M-10 Radar Reflector from .025 Galvanized Sheet Iron

Digitized by Google

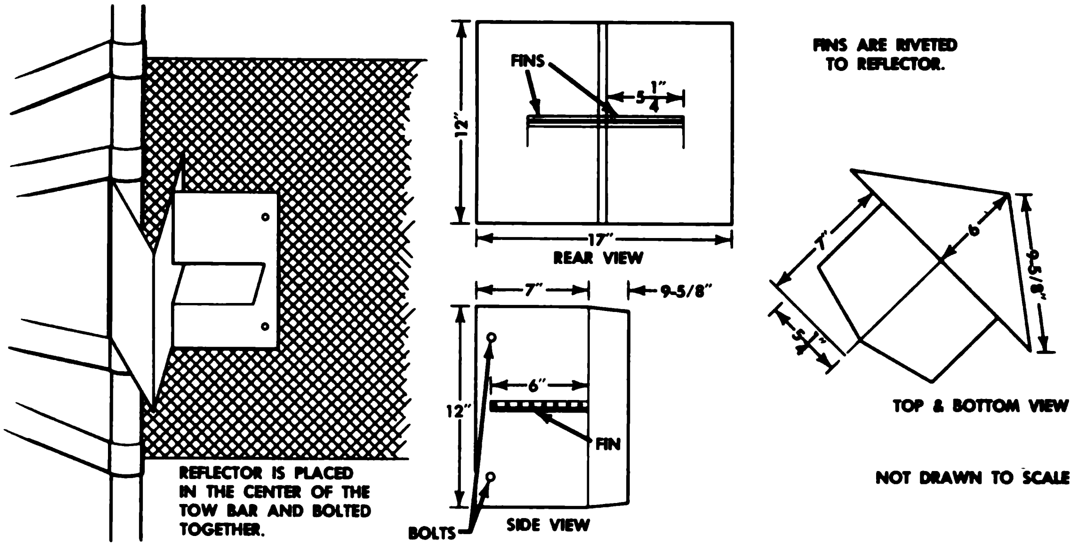

Construction Details M-10 Radar Reflector

To attach the reflector to the target, spread the vertical fins around the vertical center of the tow bar. Then place the bow of the reflector snug against the tow bar. Bolt the two vertical fins firmly together with the target between them, with two bolts which pass through the target cloth. The position is shown in the illustration below.

ADVANTAGES OF THE M-10 RADAR REFLECTOR

Manufacture of this type of reflector is simple, and attachment to the target is easy. Total cost of the reflector is $2.75 to $3.00.

There is very little damage during drag takeoff. The reflector can sustain a number of bullet strikes and still remain effective because of absence of moving parts.

The present reuse rate is two to three flights per reflector, depending upon how many times the reflector is hit during firing, and how it strikes the ground after being dropped. Careful handling during stowing and movement of the assembled target and reflector, and during retrieve of the assembly adds appreciably to its life.

Reliable and steady lock-on may be attained using the M-10 reflector at ranges of 3,600 to 4,000 feet.

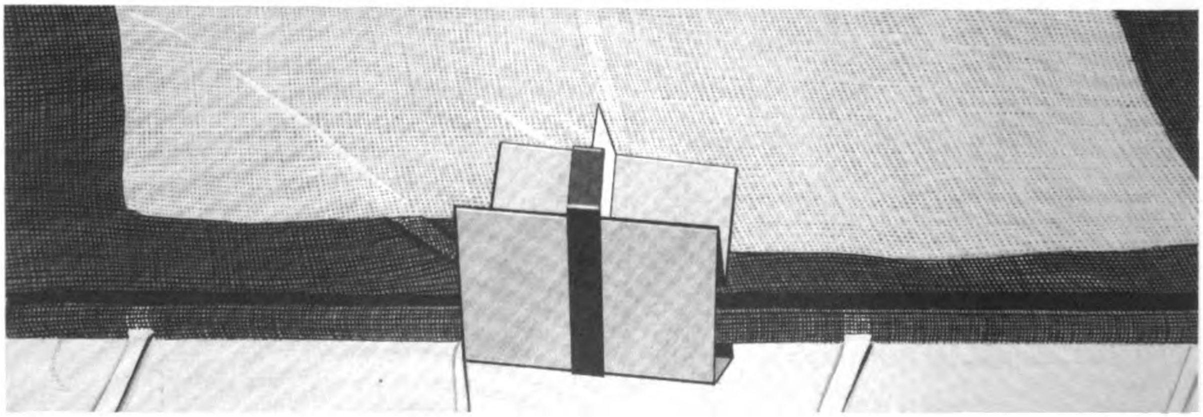

M-10 Reflector Attached to Target

Digitized by Google

appendix XI

REFERENCES

Technical Orders

AN 01-15FDA-2
Handbook: Erection and Maintenance Instructions, USAF Series F-89A Aircraft.

AN 01-60JLA-2
Handbook: Erection and Maintenance Instructions, USAF Series F-86A Aircraft.

AN 01-65BJB-2
Handbook: Erection and Maintenance Instructions, USAF Series F-84B, F-84C, and F-84D Aircraft.

AN 01-65BJC-2
Handbook: Erection and Maintenance Instructions, USAF Series F-84E Aircraft.

AN 01-75FAA-2
Handbook: Erection and Maintenance Instructions, USAF Series F-94A Aircraft.

AN 01-75FJB-2
Handbook: Erection and Maintenance Instructions, USAF Series F-80B, F-80C, Navy Model TO-1, Aircraft.

AN 10-10CB-8
Handbook: Operation, Service and Overhaul Instructions with Parts Catalog, Type N-6 and AN-N-6 Gun Cameras (Fairchild) 15 Mar 45 (revised 19 Feb 52).

AN 11-10C-12
Use of Types K-14C and K-18A Gun Sights for Rocket Firing (This technical order supplements AN 11-35C-1).

AN 11-35C-1
Handbook: Operation, Service, and Overhaul Instructions with Parts Catalog (for) Computing Gun Sights, USAF Types K-14A, K-14B, and K-18; Navy Mark 23.

AN 11-70BD-4
Handbook: Operation and Service Instructions, USAF Type A-1B Sight (Gun-Bomb-Rocket).

AN 16-30APG30-3
Handbook: Maintenance Instructions, Radio Set AN/APG-30.

AN 28-10A-19
Handbook: Operation, Service, and Overhaul Instructions with Parts Catalog for Aerial Targets. and associated Equipment.

TO 1F-84F-1
Flight Handbook: USAF Series F-84F Aircraft 10 Mar 53 (revised 10 May 54).

TO 1F-86F-2
Handbook: Maintenance Instructions, 15 Nov 53 (revised 20 May 54).

TO 11A1-1-7
Bombs for Aircraft, 7 Dec 50.

TO 11A11-1-101
Rockets, Jul 50.

TO 11B29-3-5-13
Handbook: Overhaul Instructions Type S-2 Bomb Rack 21 Sep 49 (revised 18 Aug 52).

TO 11C2-1-1
Chemical Bombs and Clusters, Apr 53.

TO 11W1-12-2-1
20-mm Automatic Guns M24, M24A1, and M24E2, 1 Apr 53.

TO 11W1-12-2-11
20-mm Automatic Gun T-160 and Caliber .60 Automatic Gun T-130, Oct 52.

TO 11W1-13-3-11
Basix Aircraft Machine Gun Caliber .50, AN-M3, 6 Sep 51.

Digitized by Google

Air Force Manuals

AFM 50-18
Bombing and Gunnery Ranges, Jun 55.

AFM 51-8
Aerial Target Techniques and Procedures, Jan 54.

AFM 335-5
Flexible Gunnery in the B-29 and B-50, Aug 53.

U. S. Navy Bureau of Ordnance

OP 1160
Bomb Ballistic Data for Horizontal Dive, and Glide Bombing. 24 May 44.

OP 1829
Trajectories of Aircraft Rockets (Surface Targets), 3 May 50.

Aviation Training Branch, Office of the Chief of Naval Operations

NAVAER 00-80T-35
Handbook of Instructions on the Techniques of Towing Aerial Targets, 1950.

Air Research and Development Command, US Air Force

WADC Manual
The Selection of Aircraft Armor, (Confidential), 1 Apr 53.

WADC Manual
Harmonization and Firing Techniques for Fighter Aircraft, Mar 52.

Air Training Command, US Air Force

Manual of Academic Training, USAF Fighter Weapons School, 1954.

Strategic Air Command, US Air Force

BAFB Reg 55-2
Tow Target Procedures, Bergstrom Air Force Base, Texas, 9 Dec 53.

Continental Air Command

ConAC Manual 50-11, Air Force Armament, volumes I, II, and III, Jun 49.

General Electric Company

GE-2406
Handbook: Operation and Service Instructions for Prototype K-19 Sights, Aug 54.

GEA
K-19 Sight.

Massachusetts Institute of Technology, Instrumentation Laboratory

A-1 Sight of the Control of Gunfire from Fixed Guns, Rocketfire, and Bombing from Aircraft, Volume I, Apr 46.

Detailed Theory and Computations for the A-1 Sight for the Control of Gunfire from Fixed Guns, Rocketfire, and Bombing from Aircraft, Volume II, Dec 45.

Report R-5, Notes for Pilots on Design and Effective Range of Operation, A-1 Gun-Bomb-Rocket Sight for Caliber .50 Gunfire, Nov 50.

Report R-6, Accuracy of A-1 Gun-Bomb-Rocket Sight for Caliber .50 Gunfire, (Confidential), Dec 50.

Report R-10, General Operating Principles of the A-1 Gun-Bomb-Rocket Sight, By A. D. Ehrenfried, Mar 50.

OSRD California Institute of Technology

CIT JNC 28 OSRD Report 2449 Forward Firing of 5.0", 3.5", and 2.25", and Aircraft Rockets from A-26B Aircraft, 15 Jun 45.

CIT JNC 30 OSRD Report 2428, Principles of Rocket Firing from Aircraft 2 Apr 45.

Sperry Gyroscope Company

No. A-4/S/3, Training Notes: Supplement I A-4 Gun-Bomb-Rocket Sight. Special Familiarization. (Confidential), 1 Nov 52.

Digitized by Google

appendix XII

GLOSSARY

acceleration, the rate of change of velocity, expressed in feet per second, miles per hour per second, or any other unit of speed divided by any unit of time. Acceleration has direction as well as magnitude, and is forward when velocity is increased, or backward (see deceleration) when velocity is decreased.

accelerometer, instrument which measures and indicates the magnitude of acceleration of an aircraft in flight and is a direct indication of forces applied to the aircraft and the pilot or crew.

angle-off, the angular measurement between the line of flight of an aerial target and gunbore and sight line of an attacking aircraft.

air density, the weight of air per unit of volume, for example, pounds per cubic foot or pounds per cubic inch; or the mass density of the air through which the aircraft is moving, in terms of the weight of a unit volume of air divided by the acceleration of gravity.

amplifier, device used to increase the amplitude of an electric current voltage.

angle of attack, the acute angle between a reference line in a body and the line of relative wind direction projected on a plane containing the reference line and parallel to the plane of symmetry, or the acute angle between the chord of an airfoil and its direction of motion with relation to the air.

angle of incidence, a fixed angle between the plane of the wing chord and the line of thrust or any other longitudinal line which is level when the fuselage is level longitudinally.

angle of pitch, the acute angle between two planes defined as follows. One plane includes the lateral axis of the aircraft and the direction of the relative wind, the other includes the lateral axis and the longitudinal axis.

angle of yaw, the acute angle between the direction of the relative wind and the plane of symmetry of an aircraft. The angle is in position when the aircraft turns to the right.

angular velocity, the rate of changing direction or the angle through which any radius of a rotating body turns in a given unit of time. It may be expressed in revolutions per minute (r.p.m.), degrees per second, or radians per second.

aspect ratio, in an airfoil wing, the ratio of span to the mean chord of an airfoil, that is, the ratio of the square of the maximum span to the total *axes, aircraft*, three fixed lines of reference, having a common point of intersection and mutually perpendicular. The first of the axes, the *longitudinal axis* in the plane of symmetry, is usually parallel to the thrust line. The second, about which the aircraft rotates in yawing, is the *vertical axis*, and the third, the axis perpendicular to the other two is the *laterial axis*.

bomb trajectory, the curved path of the bomb moving freely in space.

bore sight line, the line of sight from the gun bore to a specified target established in harmonization of the fighter aircraft's guns.

calibrate, to graduate, grade, or mark in representative units, associated with the correction of markings on instruments and measuring devices.

cone of dispersion, the scattering or dispersing of projectiles fired from machine guns caused by gun and aircraft vibration.

cross wind force, the component, perpendicular to the lift and to the drag, of the total air force on the aircraft or any part of it.

datum line, base line or reference line from which calculations or measurements are taken.

Digitized by Google

deceleration, the retarding or slowing down of an object, that is, the decrease in the rate of change of velocity — negative acceleration.

deflection, the bending or displacement of the neutral axis, a turning from a straight line or a given course.

deflection gyro, a gyroscopic instrument, a component of the computing gunsights discussed in this manual, measuring rate of turn through the vertical axis of the aircraft.

elevation gyro, a gyroscopic instrument, a component of the computing gunsights discussed in this manual, measuring rate of turn of the pitching movement through the horizontal axis of the aircraft.

field of force, a region in space filled with a magnetic force which spreads in all directions.

fuselage reference line, a theoretical line or a basic reference line from which basic dimensions are laid out and major components are located. This line usually extends along the plane of symmetry at a convenient height along the fuselage.

g, a symbol used to denote gravity or acceleration due to gravity.

ground attack, in ground gunnery, the process of firing machine guns at targets on the ground. In high-angle strafing, the process of firing machine guns at targets on the ground from angles of dive higher 45°. In dive bombing, the process of aiming or directing bombs at targets on the ground by diving the aircraft in the direction of the target. In rocket firing, the process of firing and directing rocket projectiles at airborne or ground targets.

gun sight line, the line of sight or aiming point through the fixed optical system of a fighter aircraft's gun sight.

gun jump, the angle between the direction of the gun bore at the instant the charge is fired and the direction of the gun bore as the projectile is leaving the muzzle.

hookup, attachment of the tow target and cable to the aircraft.

linear acceleration, change in velocity or rate of such change measured in a straight line.

magnetic density, a measure of the strength of a magnetic field, that is, the amount of compactness of the magnetic lines of force.

magnetic field, the region, permeated by the magnetic lines of force, surrounding a magnet.

magnetic lines of force, the lines along which magnetic influence exerts its force.

parallax, in gunnery, the angular distance between gun bore line and the gunsight line. In the optical system of a gunsight, parallax is also said to exist when, upon aiming at a target, there appears to be a shift between the line of sight from the pilot's eye and the gunsight reticle image in its relation to the target when the pilot moves his head.

pattern harmonization, harmonizing the machine guns of a fighter aircraft to effect coverage of a certain area or pattern with the machine gun bullets.

plane of symmetry, a vertical plane passing through the longitudinal axis of the aircraft, about which both halves of the aircraft are symmetrical.

point harmonization, harmonizing the machine guns of a fighter aircraft in such a manner that the trajectories of the machine guns cross at a specific point in range.

projectile, a body, such as a bullet or rocket, capable of being thrust forward by an exterior force.

pylon, that portion of the aircraft containing the bomb rack to which the tow right attaches.

reference axis, a line in space from which distances are measured for reference.

resultant force, the single force which, if acting alone, would produce the same effect of several combined forces.

rheostat, a variable resistance for limiting the current in a circuit.

rockets, 2.25-inch SCAR: subcaliber aircraft rocket having a warhead of 2.25 inches. This rocket is used for training purposes only. 5-inch HVAR: a high-velocity aircraft rocket having a warhead 5 inches in diameter. 5-inch AR: an aircraft having a warhead 5 inches in diameter.

servo, a small auxiliary source of power used to operate heavy control mechanisms.

sight picture, the relationship between a gunsight reticle image and the target as it appears to the pilot.

slant range, the distance from the aircraft to the target at the time of firing guns and rockets or releasing bombs.

Digitized by Google

stadiametric control, a manual or automatic device, such as the movable reticle image, used with computing gunsights to determine the range of the target.

tow rig (bar), a locally manufactured device designed for attachment to the bomb pylon on the aircraft, to enable the aircraft to tow aerial banner targets for support of fighter air-to-air gunnery.

trajectory, the curved path of a projectile, bullet, rocket, or bomb freely moving in space.

tracking index, the central aiming point of the reticle image of the gunsight. The tracking index is commonly referred to as a *pipper*.

tracking instability, condition that exists when a fighter pilot attempts to correct for a tracking inaccuracy during the process of tracking a target. It causes the pipper, or tracking index, to move still farther away from the target.

sight tracking line, the line of sight from the computing gunsight reticle image to the target.

tracking stability, condition that exists when a fighter pilot attempts to correct for a tracking inaccuracy during the process of tracking a target. It causes the tracking index to move toward the target.

trajectory shift, a shift in the trajectory caused by any action of the aircraft that changes its angle of attack.

vector, a line representing a quantity which has magnitude, direction, and point of application. The length of the vector drawn to any convenient scale gives its magnitude. The slope and position of the vector shows its line of action, and an arrowhead indicates the direction in which the force is acting along its line of action. Displacement, force, velocity acceleration, and torque are vector quantities.

turnaround, the point at which the tow aircraft executes a 180° turn after reaching the extremity of the designated aerial range.

velocity, the combination of speed and direction. Velocities can be treated as vectors and, as such, can be added and subtracted by graphical methods. More specifically, velocity is the rate of change of distance with respect to time. It is most often stated in miles per hour or feet per second. The average velocity is equal to the total distance divided by total time. Velocity may be constant or may increase or decrease with respect to time.

zero length launchers, a launcher rail that consists of two or three posts that hold the rocket in firing position.

zero lift angle, the angle of attack of an airfoil when its lift is zero.

Digitized by Google

index

Digitized by Google

Digitized by Google

Digitized by Google

Digitized by Google

Digitized by Google

AIR FORCE-UNIVERSAL PRINTING CO., ST. LOUIS, MO., MAY, 1956—7600 COPIES (370 PAGES)
Copies of this manual cannot be obtained from the printers. See Foreword page for Official distribution data.

Digitized by Google

Digitized by Google

Digitized by Google

7/8/2011
BT 233907 5 37 00
HF GROUP-IN

Digitized by Google

UNIVERSITY OF ILLINOIS-URBANA
3 0112 107817238

Digitized by Google